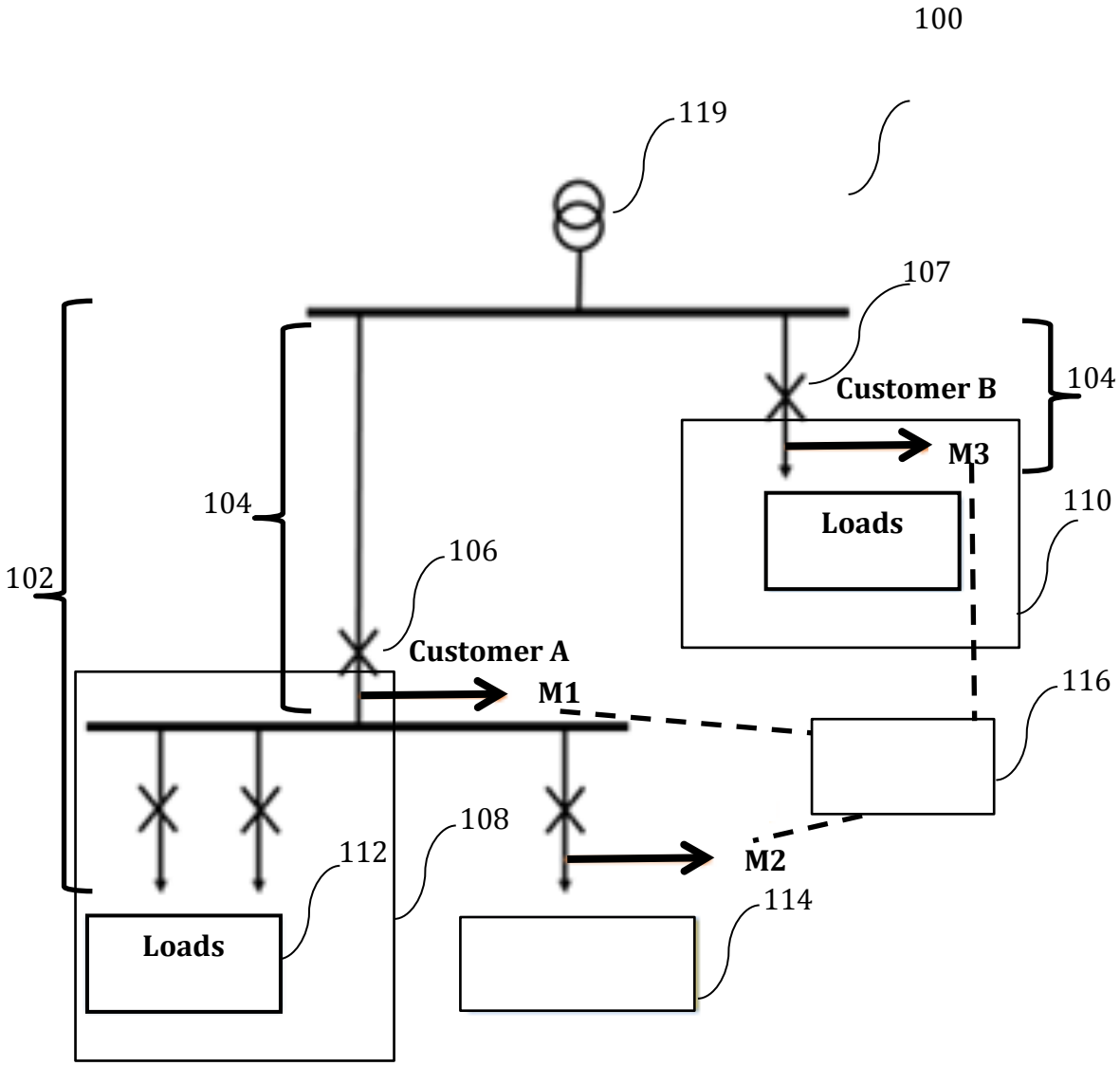
100
119
107
Customer B
104
M3
Loads
110
104
102
106
Customer A
M1
116
108
112
M2
Loads
114

Figure 1

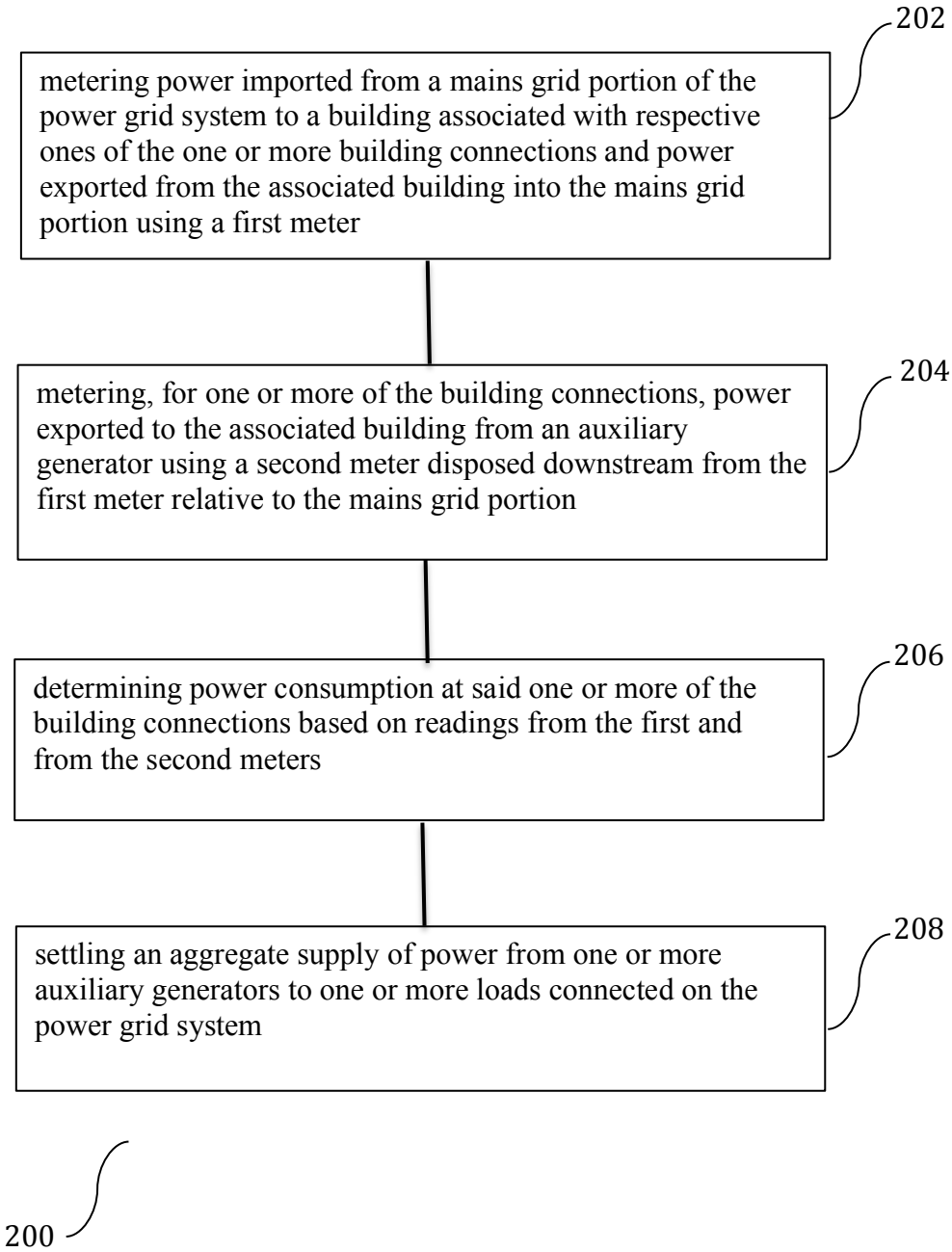
202
metering power imported from a mains grid portion of the power grid system to a building associated with respective ones of the one or more building connections and power exported from the associated building into the mains grid portion using a first meter
204
metering, for one or more of the building connections, power exported to the associated building from an auxiliary generator using a second meter disposed downstream from the first meter relative to the mains grid portion
206
determining power consumption at said one or more of the building connections based on readings from the first and from the second meters
208
settling an aggregate supply of power from one or more auxiliary generators to one or more loads connected on the power grid system
200

Figure 2

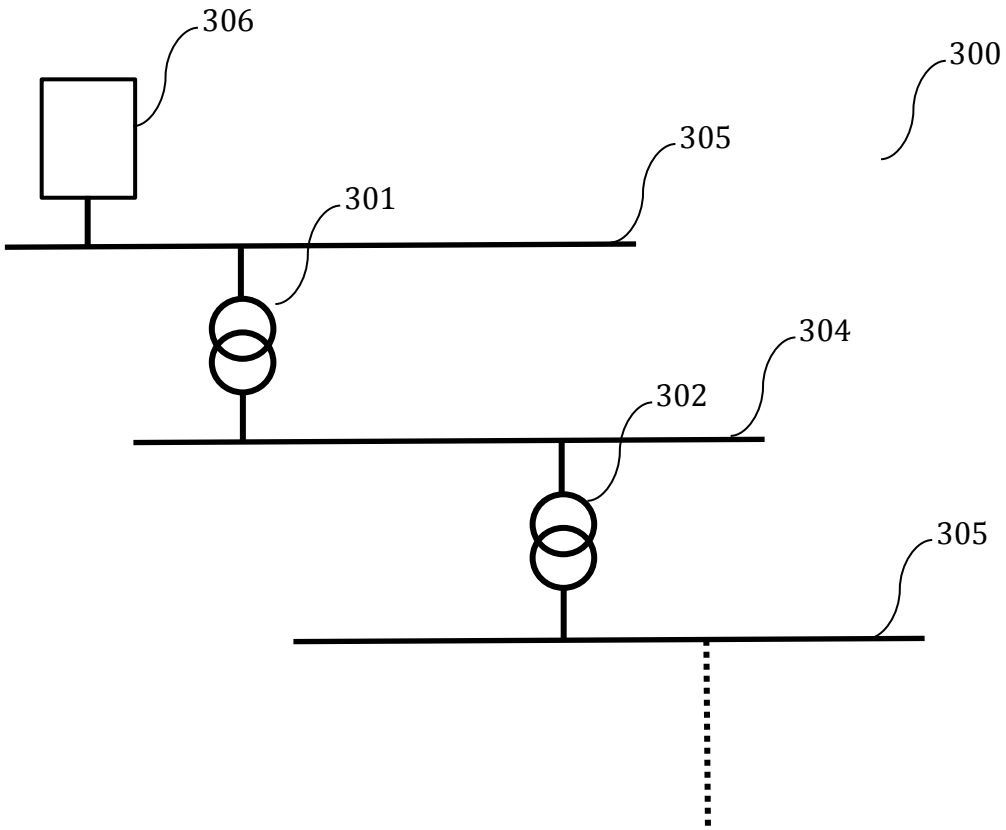

Figure 3