FIG.1

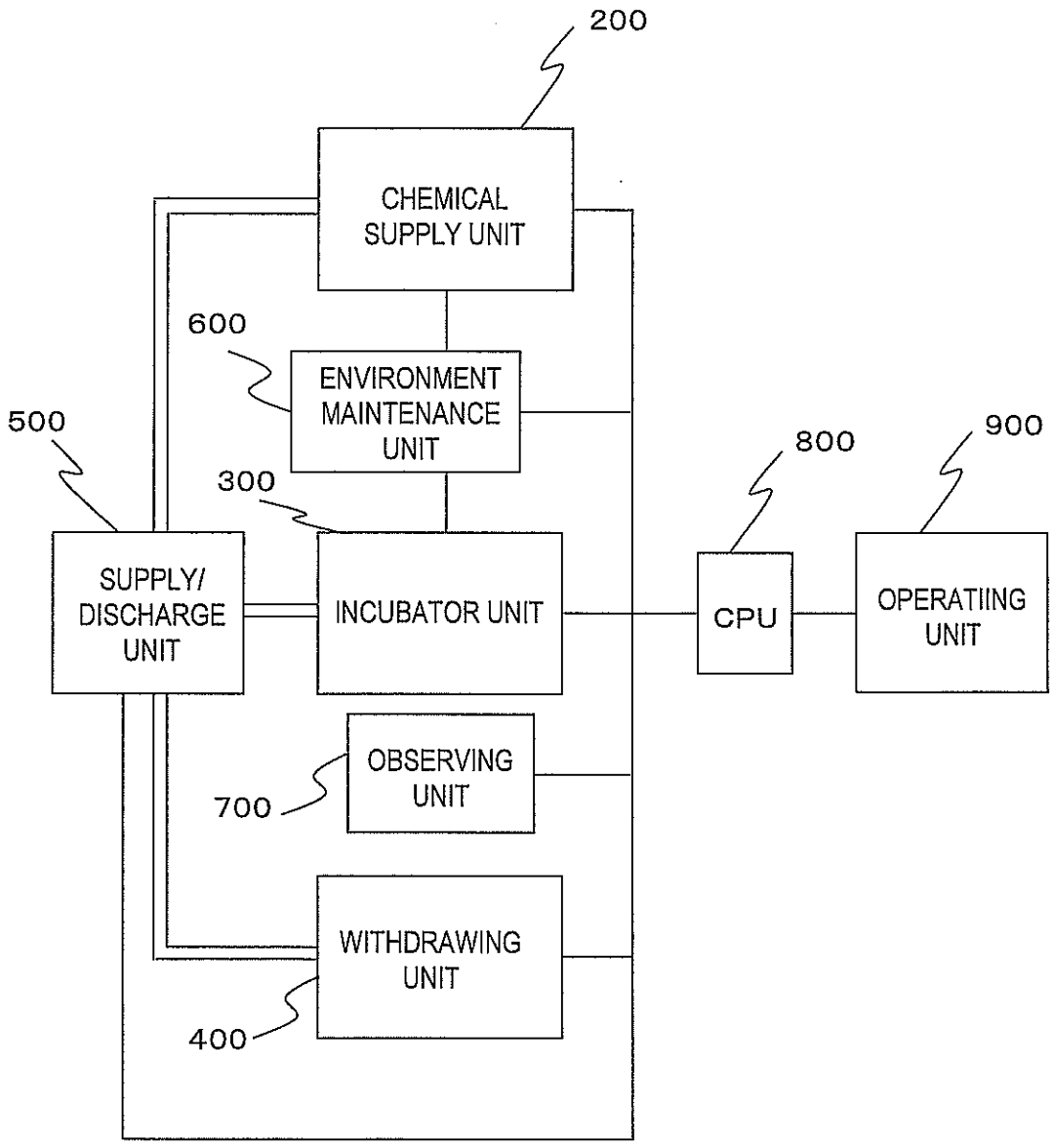
200
CHEMICAL SUPPLY UNIT
600
ENVIRONMENT MAINTENANCE UNIT
500
300
800
900
SUPPLY/ DISCHARGE UNIT
INCUBATOR UNIT
CPU
OPERATIING UNIT
OBSERVING UNIT
700
WITHDRAWING UNIT
400

FIG.2

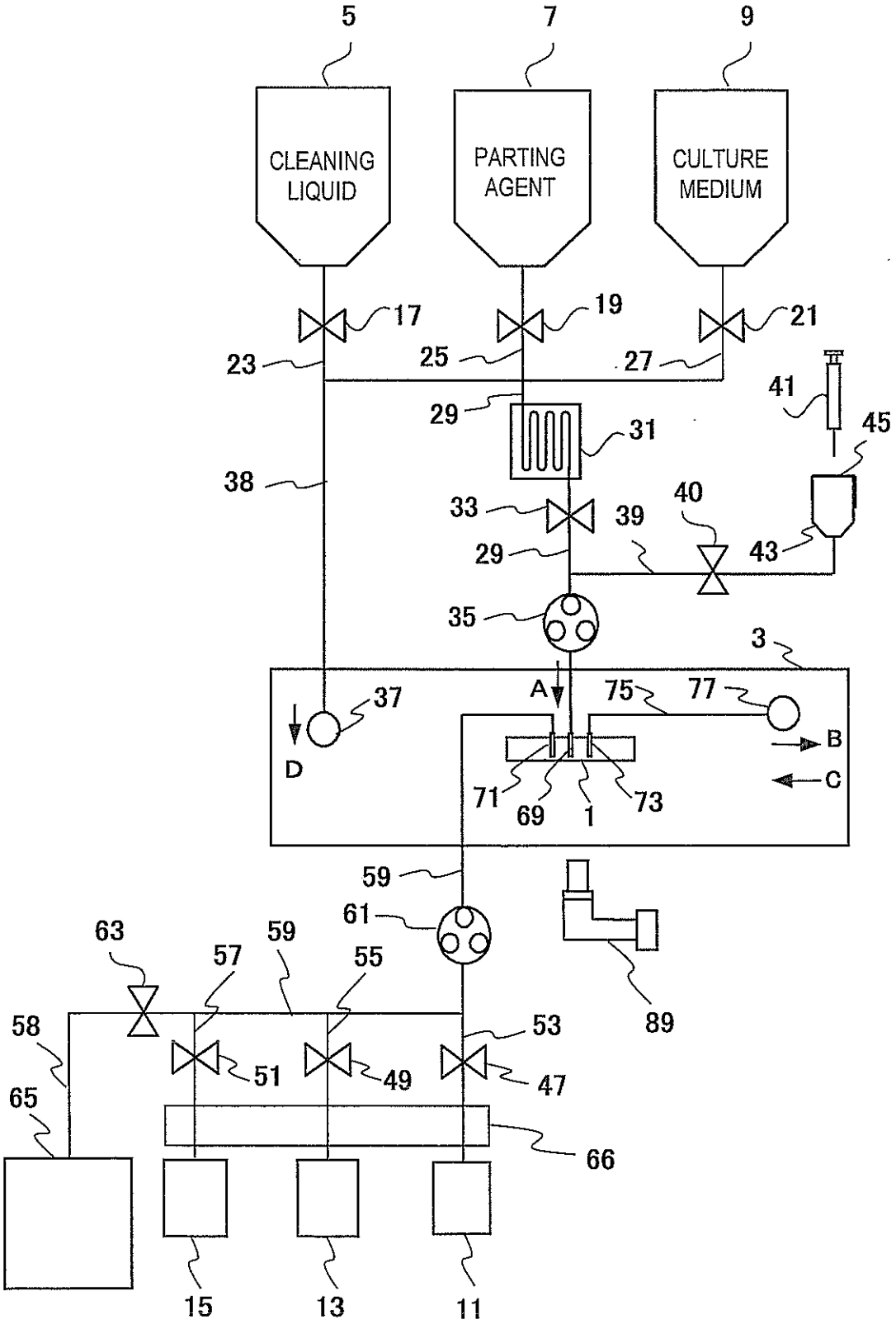
5
7
9
CLEANING LIQUID
PARTING AGENT
CULTURE MEDIUM
17
19
21
23
25
27
41
29
31
45
38
33
39
40
43
29
35
3
A
37
75
77
B
D
C
71
69
1
73
59
61
63
57
59
55
89
58
53
51
49
47
65
66
15
13
11

FIG.3

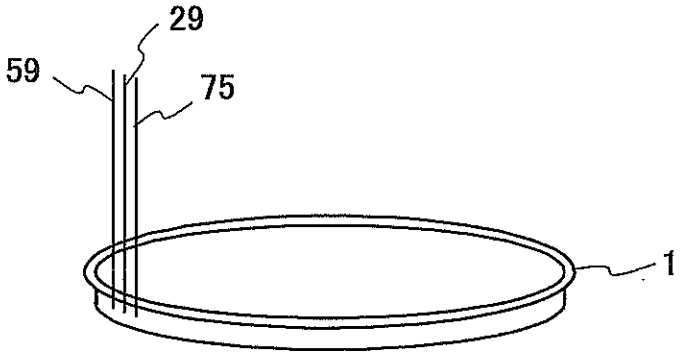

FIG.4

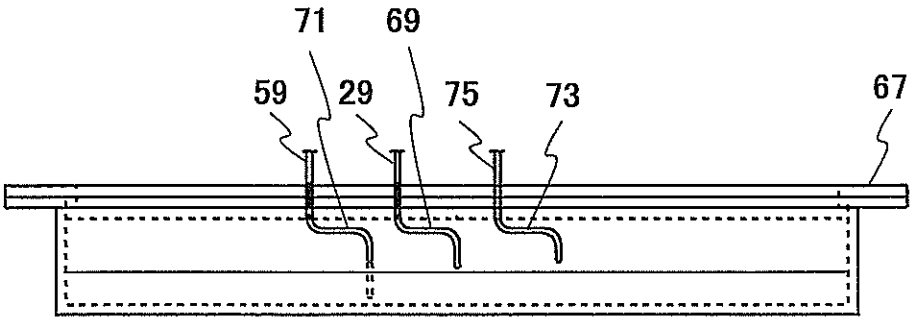

FIG.5

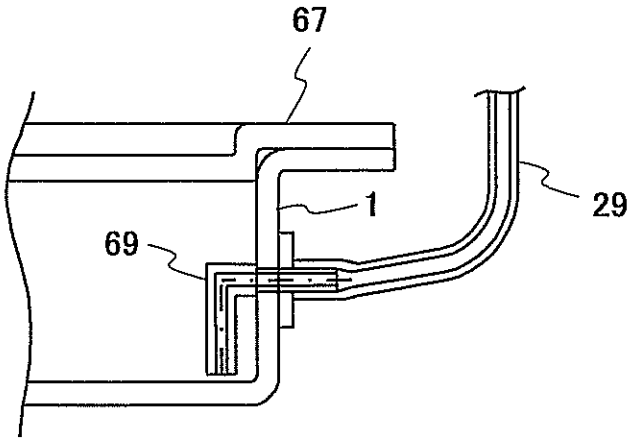

FIG.6

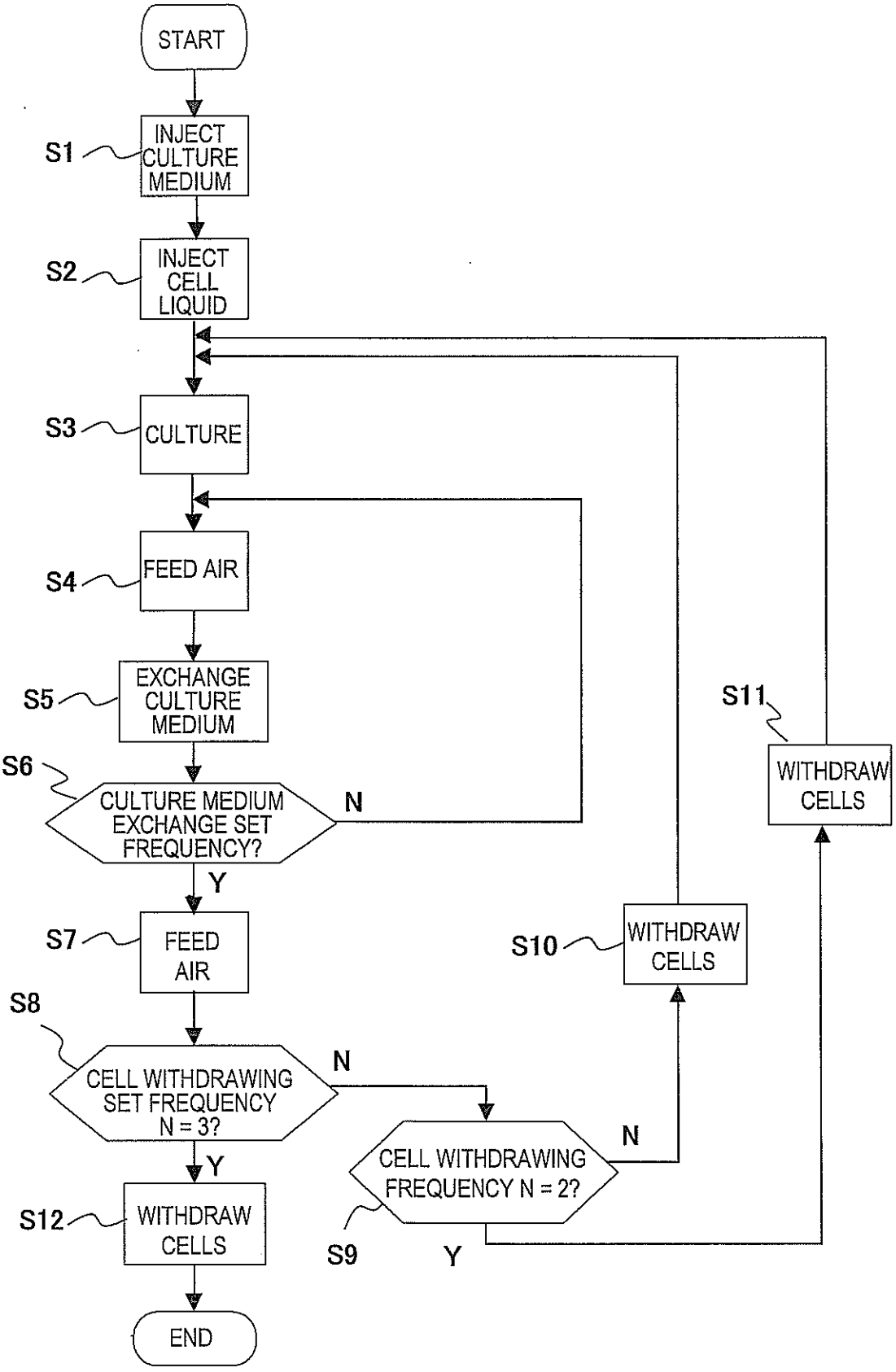
START
S1
INJECT CULTURE MEDIUM
S2
INJECT CELL LIQUID
S3
CULTURE
S4
FEED AIR
S5
EXCHANGE CULTURE MEDIUM
S6
CULTURE MEDIUM EXCHANGE SET FREQUENCY?
N
Y
S7
FEED AIR
S8
CELL WITHDRAWING SET FREQUENCY N = 3?
N
Y
S9
CELL WITHDRAWING FREQUENCY N = 2?
N
Y
S10
WITHDRAW CELLS
S11
WITHDRAW CELLS
S12
WITHDRAW CELLS
END

FIG.7

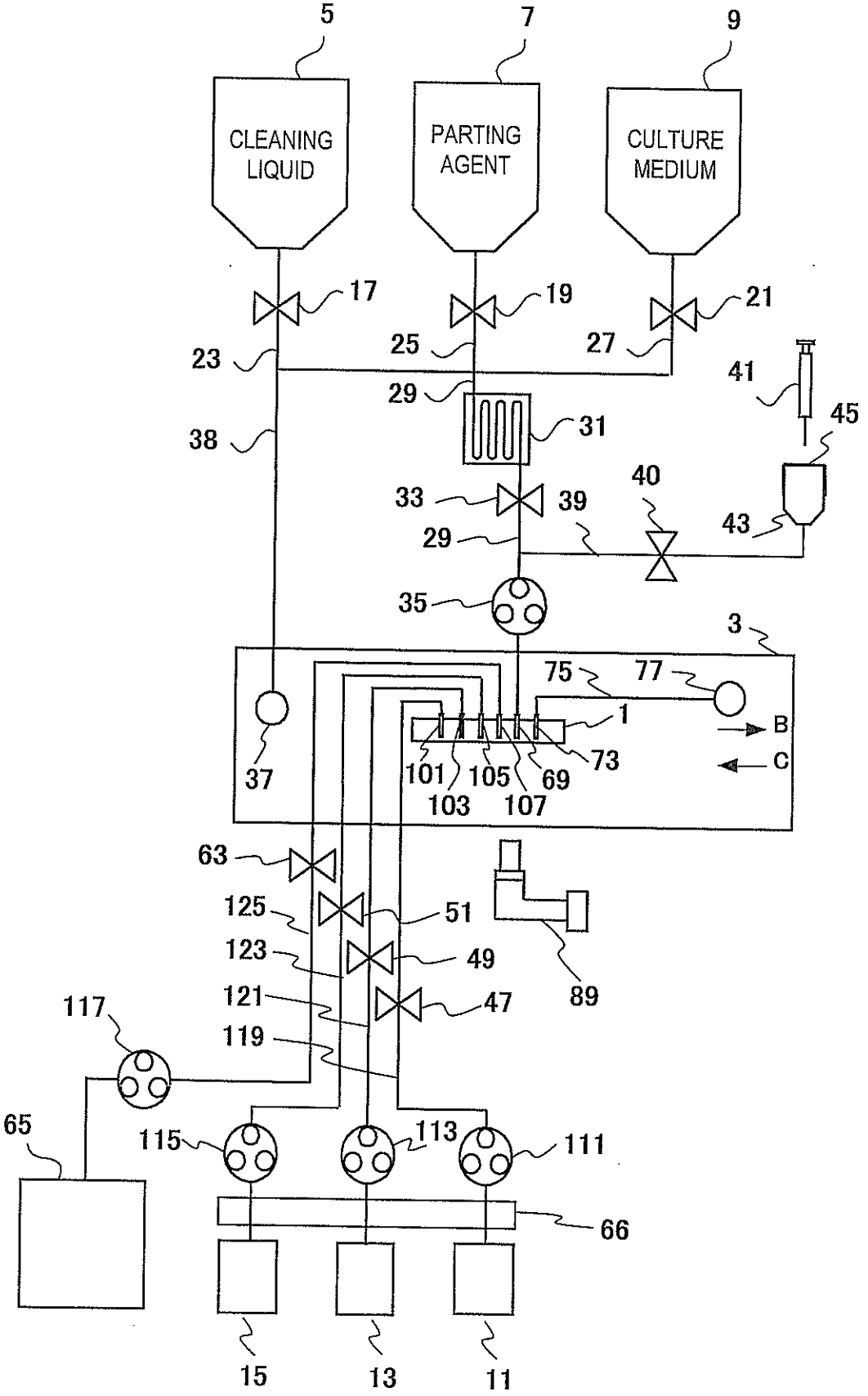
5
7
9
CLEANING LIQUID
PARTING AGENT
CULTURE MEDIUM
17
19
21
23
25
27
29
31
38
41
45
33
39
40
43
29
35
3
75
77
1
B
C
37
101
103
105
107
69
73
63
125
51
123
49
121
47
119
89
117
65
115
113
111
66
15
13
11