FIG. 1

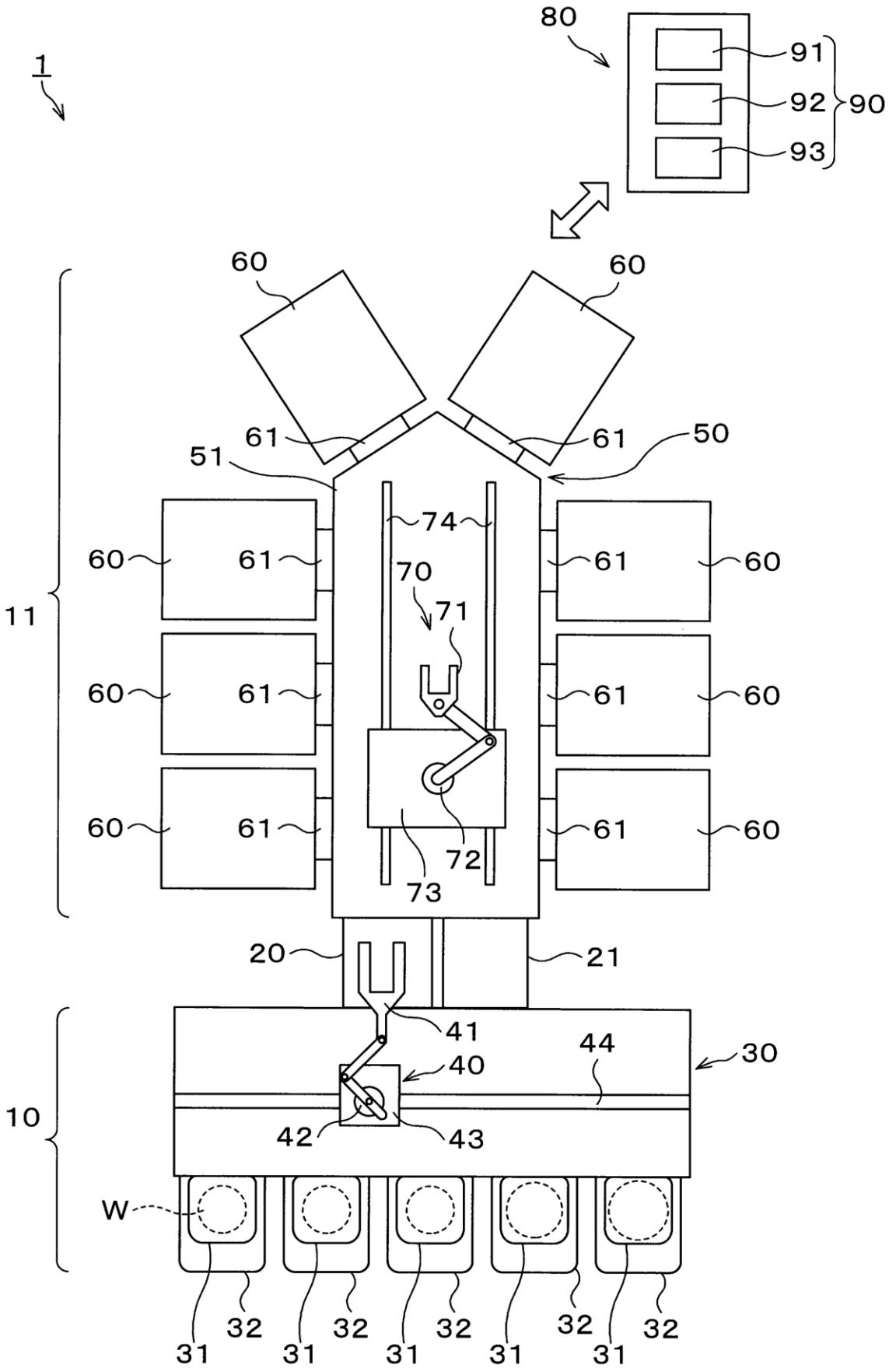
80
91
92
90
93
1
60
60
61
61
50
51
74
60
61
61
60
70
71
60
61
61
60
11
60
61
61
60
72
73
20
21
41
44
30
40
10
42
43
W
31
32
31
32
31
32
31
32
31
32

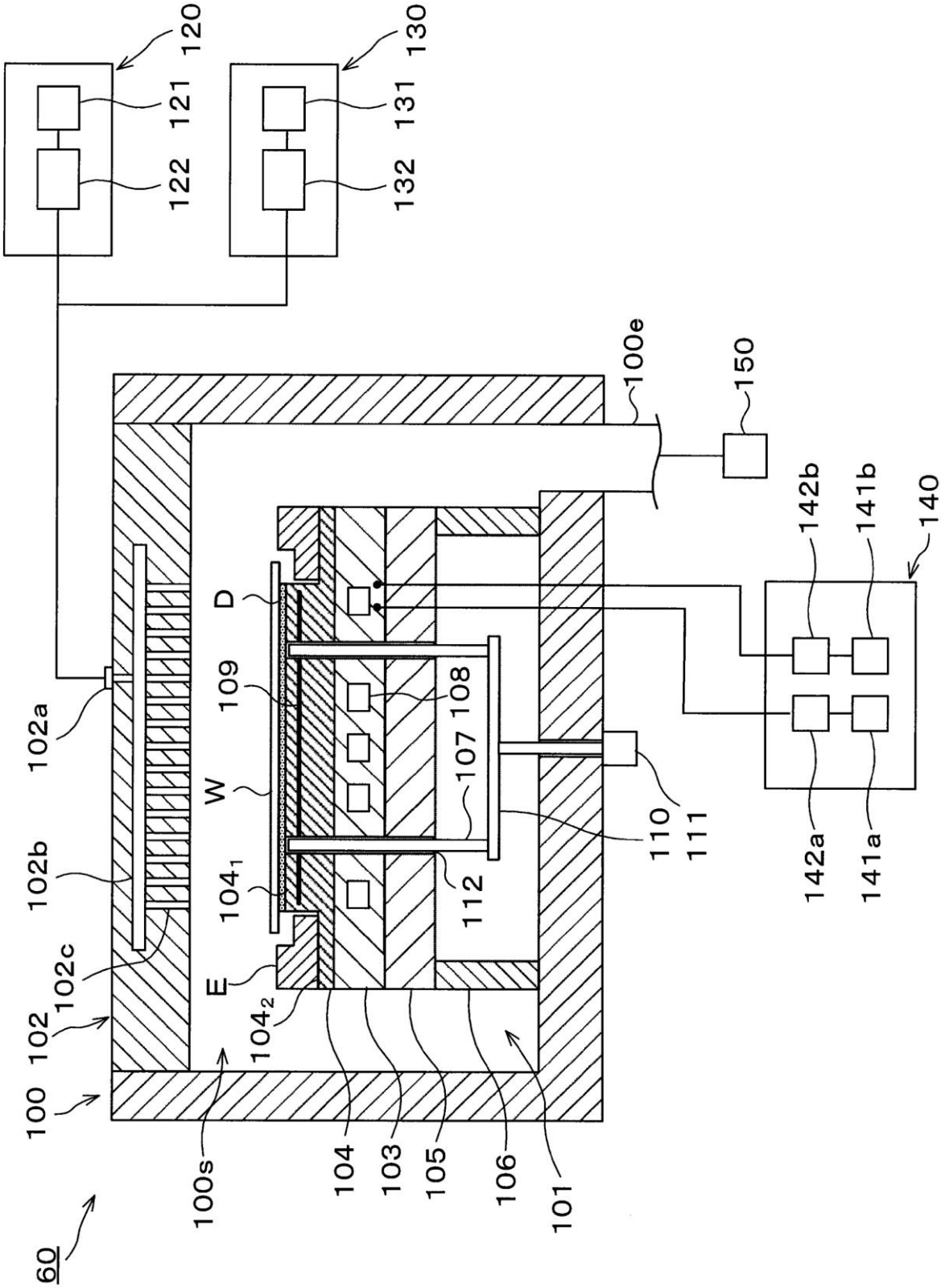
120
121
122
130
131
132
100e
150
142b
141b
140
142a
141a
D
109
108
107
W
110
111
112
102a
102b
102c
102
100
104_1
104_2
E
100s
104
103
105
106
101
60

FIG. 2

FIG. 3

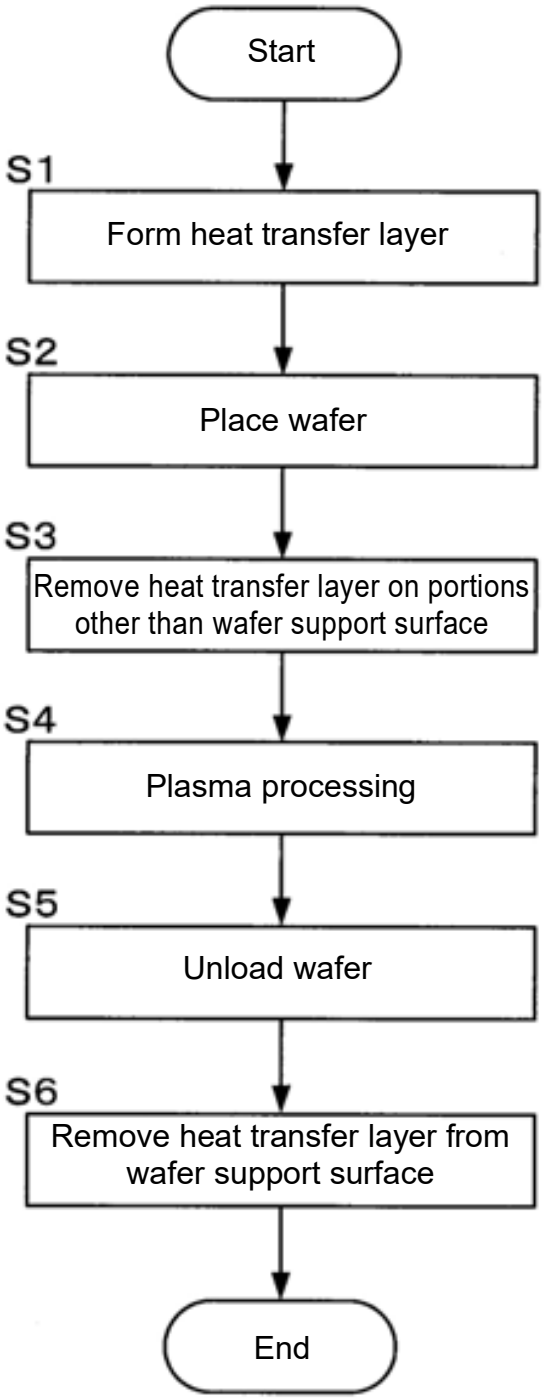
Start
S1
Form heat transfer layer
S2
Place wafer
S3
Remove heat transfer layer on portions other than wafer support surface
S4
Plasma processing
S5
Unload wafer
S6
Remove heat transfer layer from wafer support surface
End

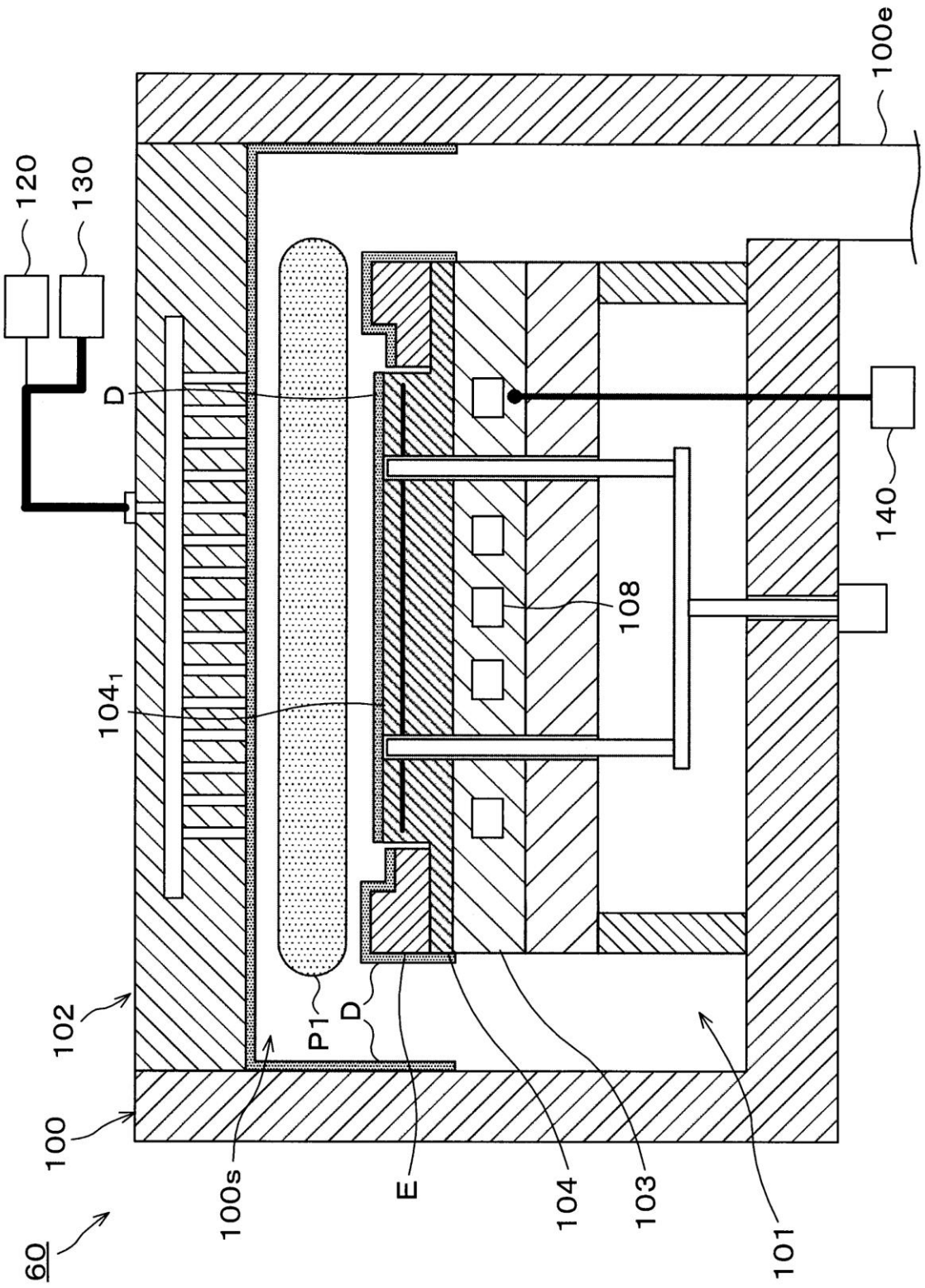

FIG. 4

FIG. 5

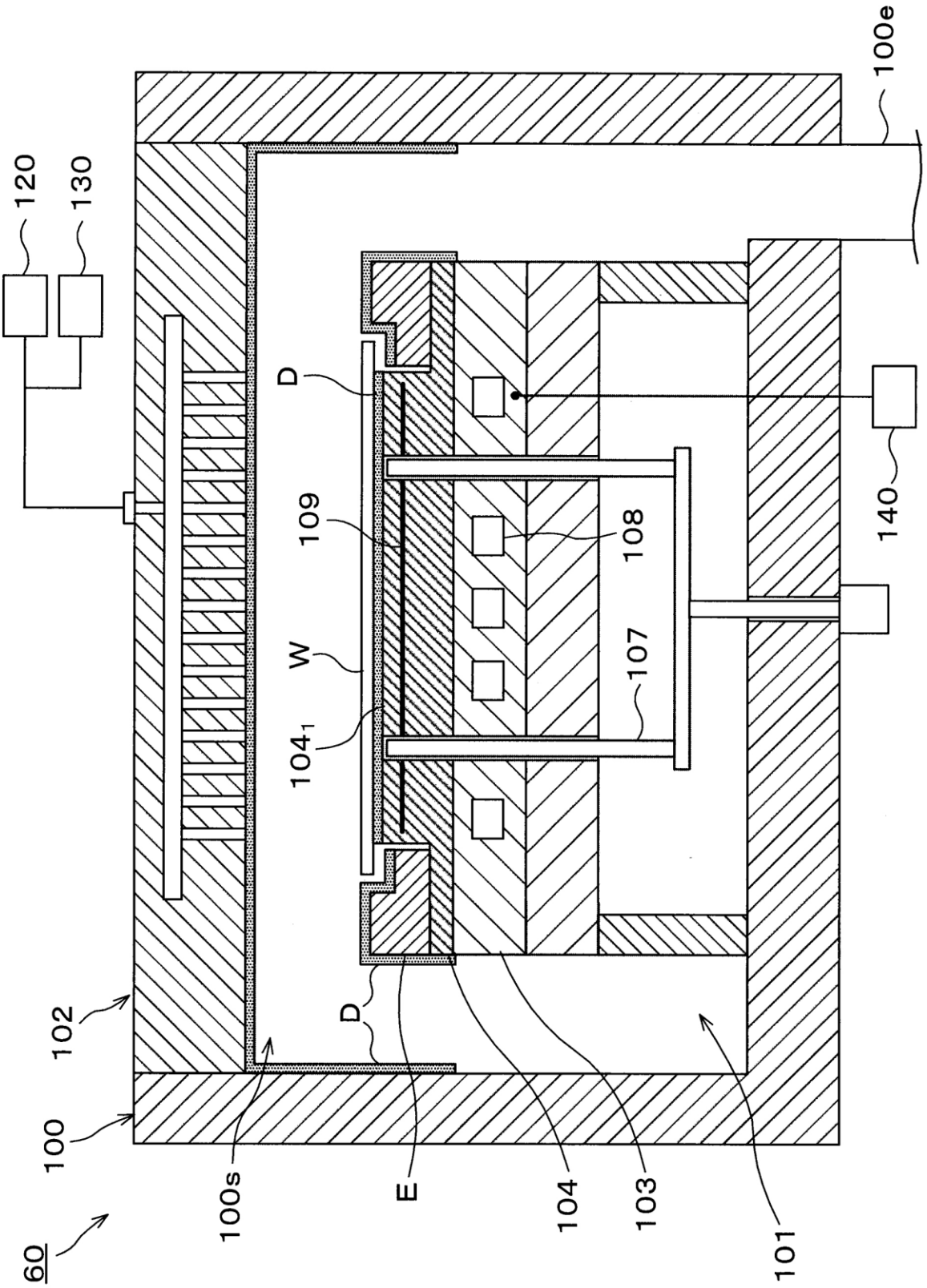
60
100
102
100s
E
104
103
101
D
D
109
W
104_1
108
107
120
130
140
100e

FIG. 6

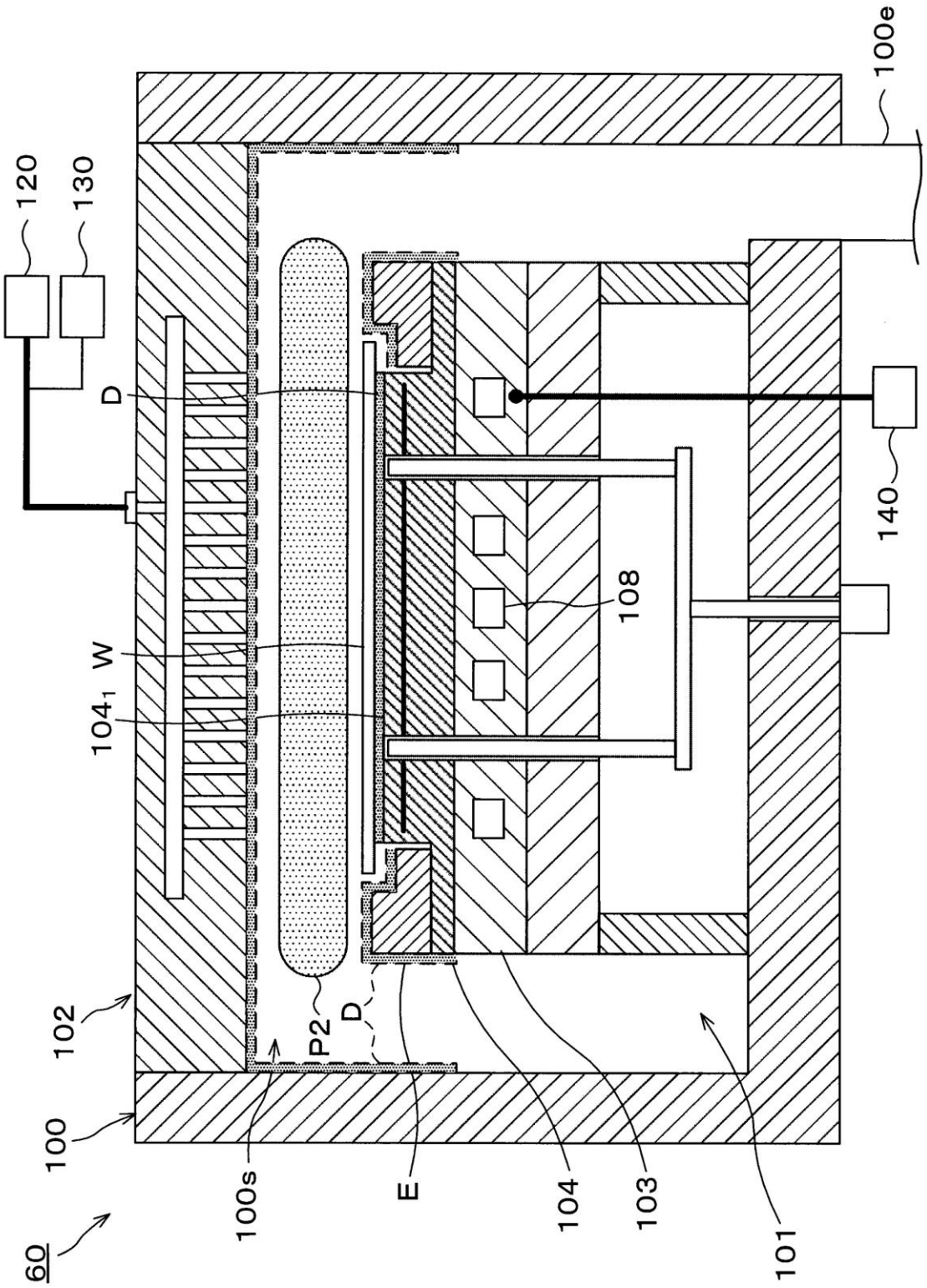

FIG. 7

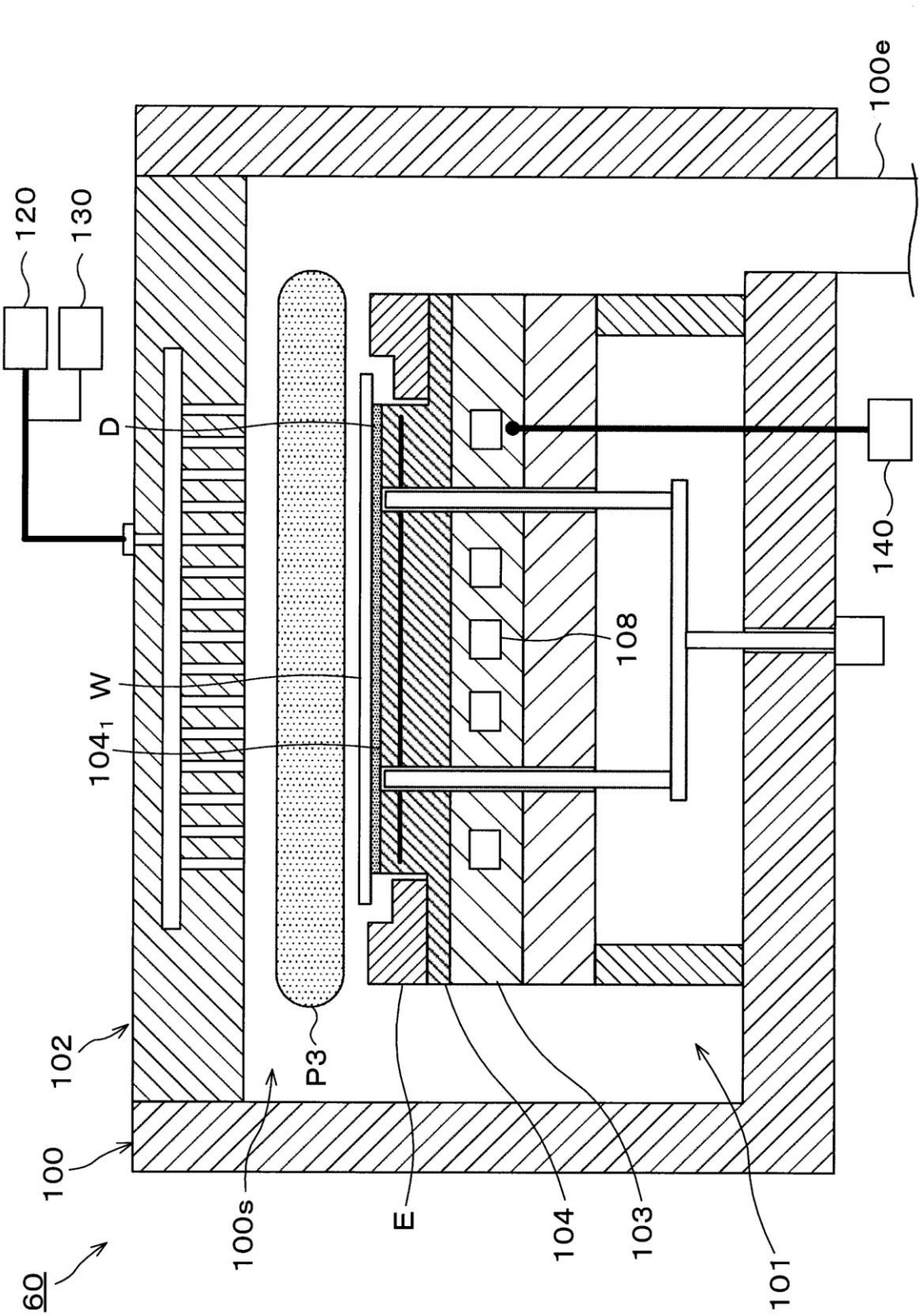

FIG. 8

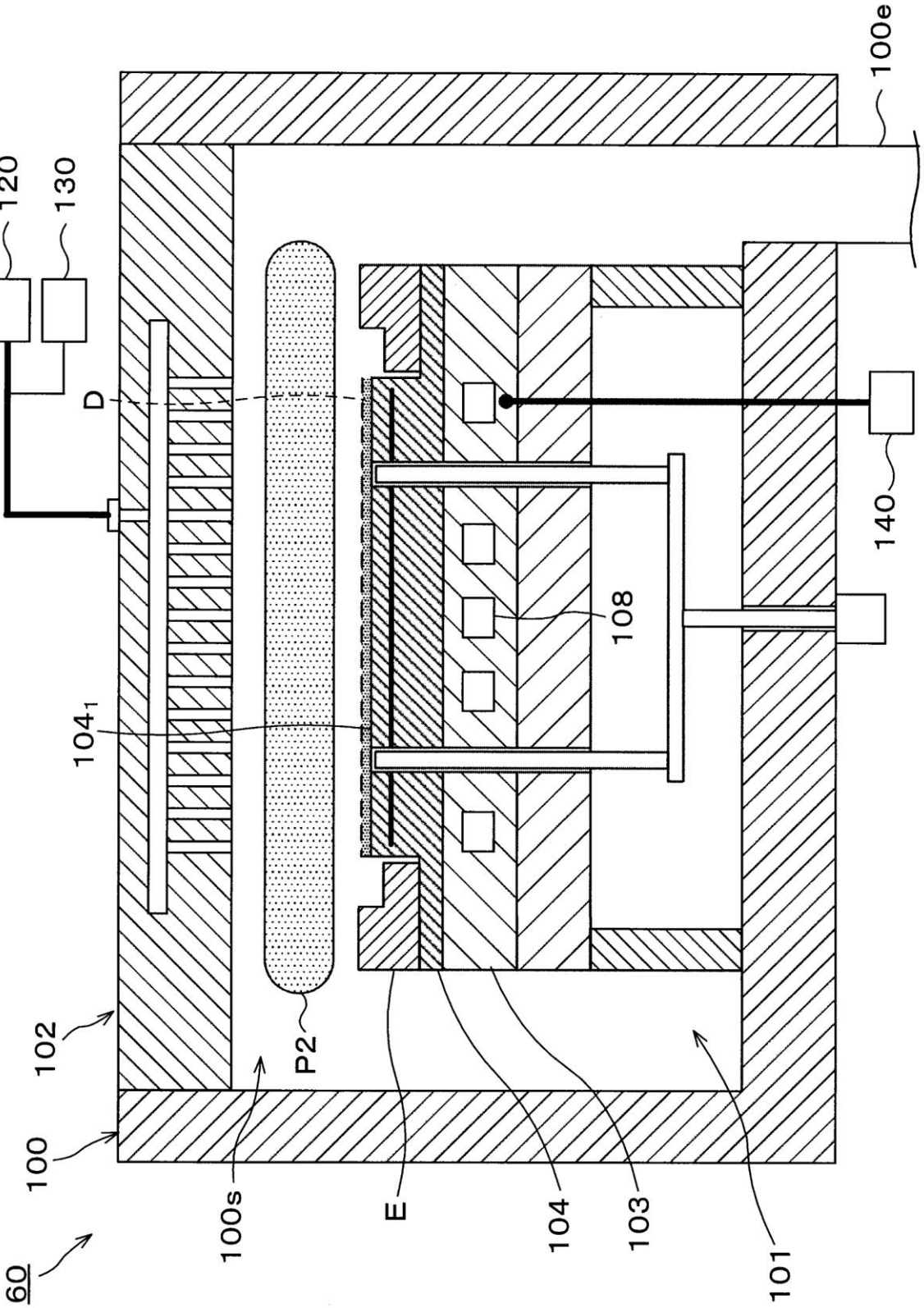

FIG. 9

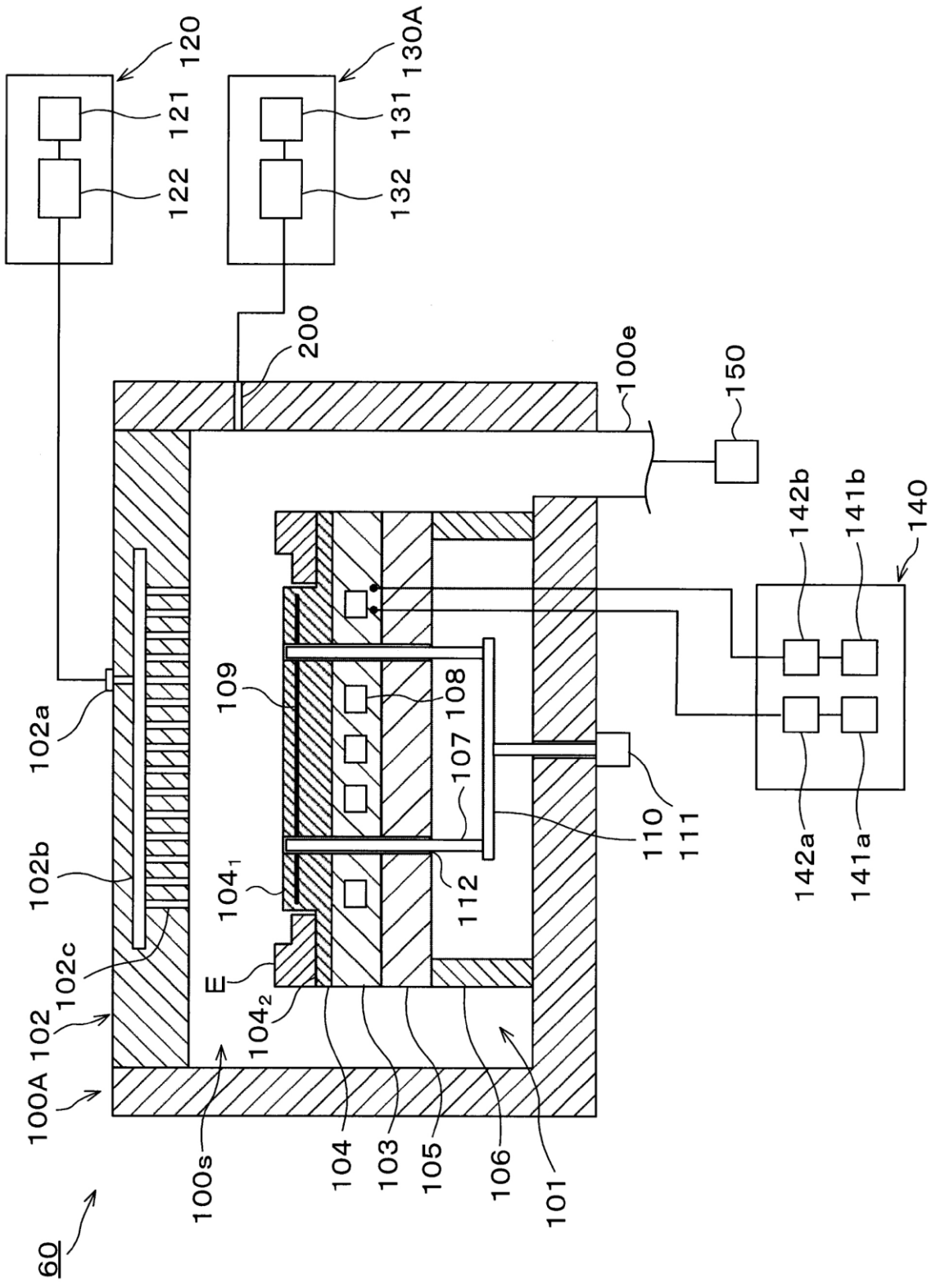
120
121
122
130A
131
132
200
100e
150
140
142b
141b
142a
141a
102a
109
108
107
110
111
102b
104_1
112
102c
E
104_2
102
100A
100s
104
103
105
106
101
60

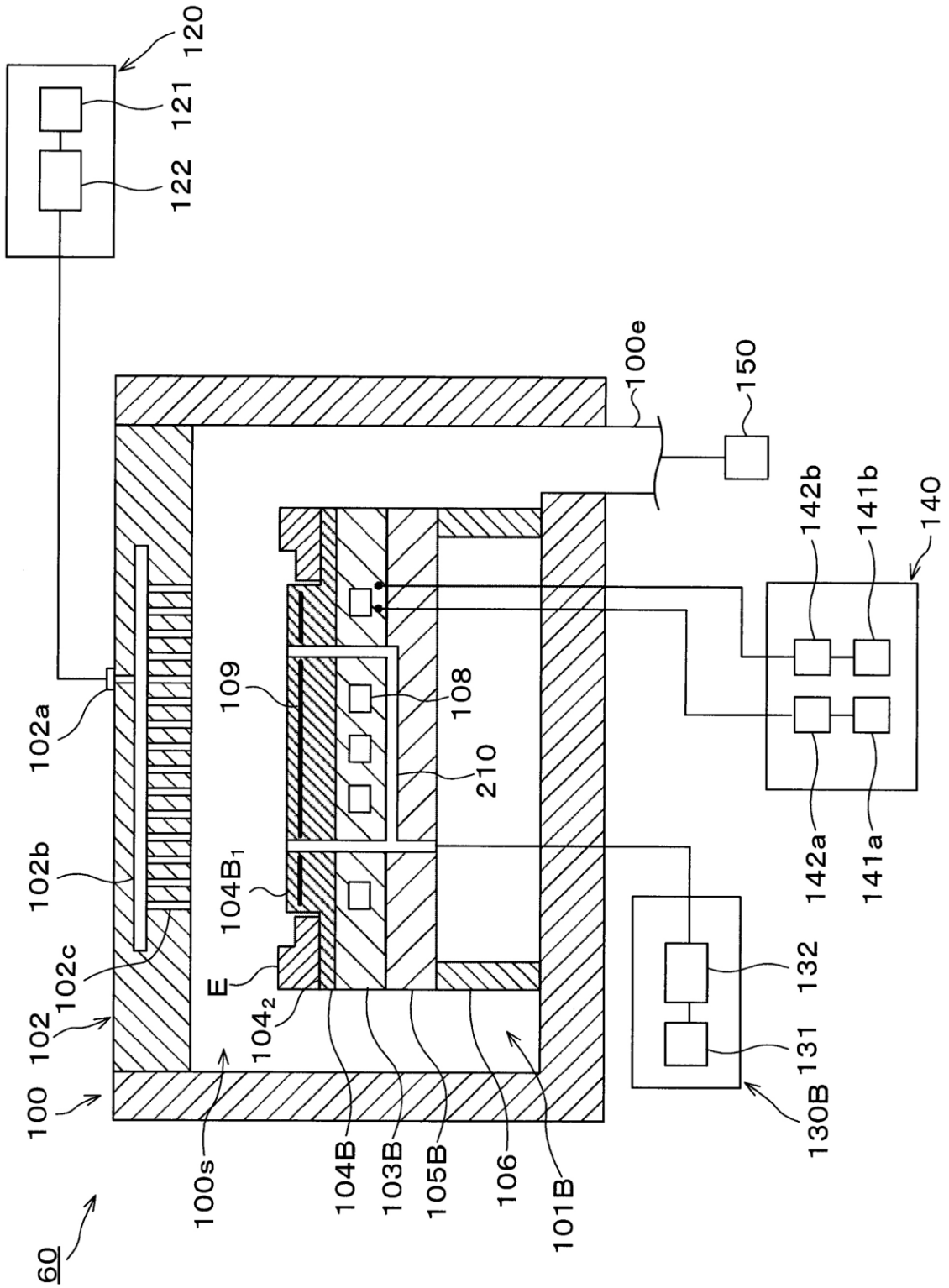
120
121
122
100e
150
142b
141b
140
109
108
210
102a
102b
102c
102
100
104B1
E
104₂
100s
104B
103B
105B
106
101B
132
131
130B
142a
141a
60

FIG. 10

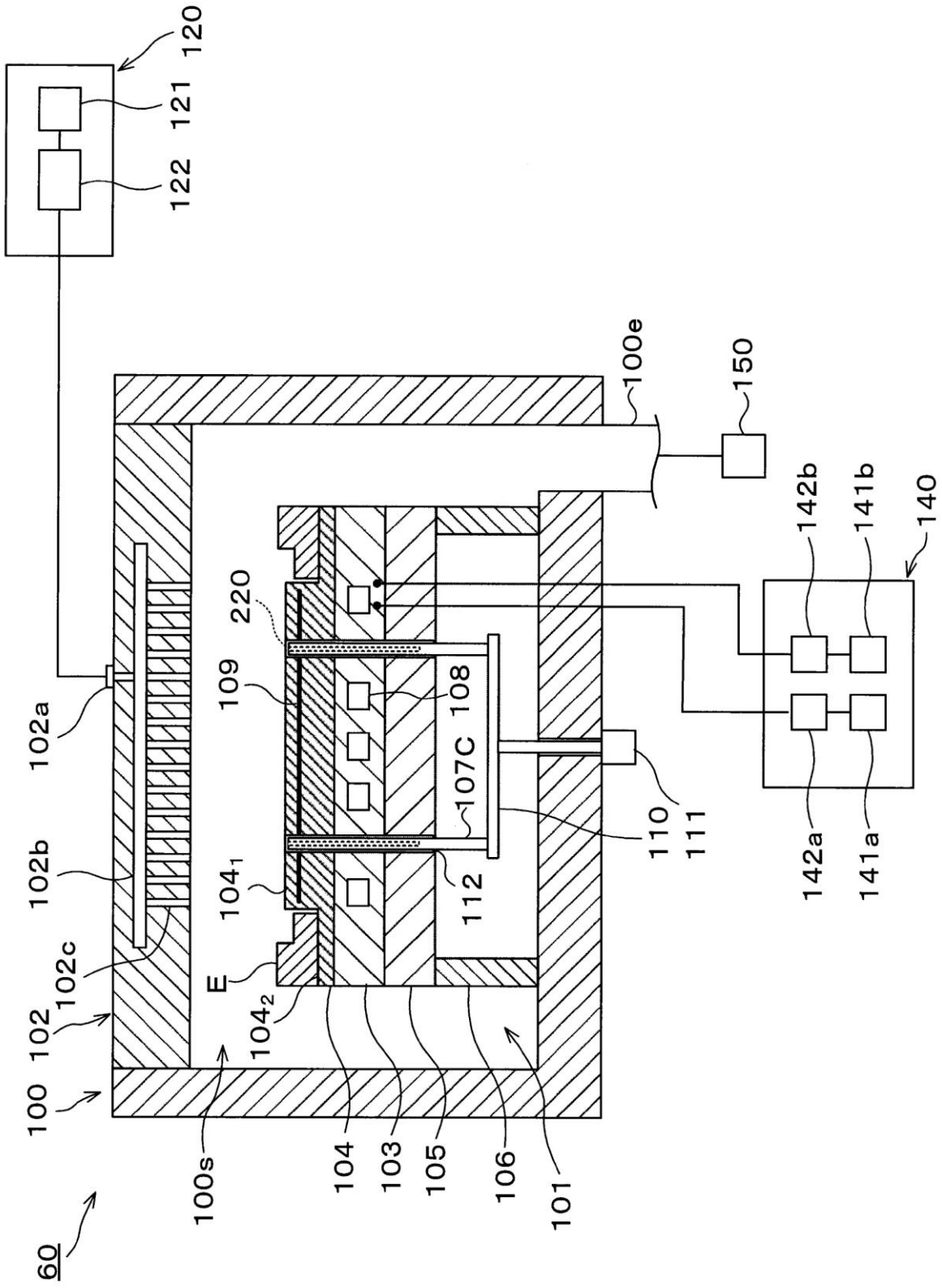
120
121
122
100e
150
142b
141b
140
220
109
108
107C
110
111
112
102a
102b
102c
102
100
104_1
104_2
E
100s
104
103
105
106
101
142a
141a
60

FIG. 11

FIG. 12

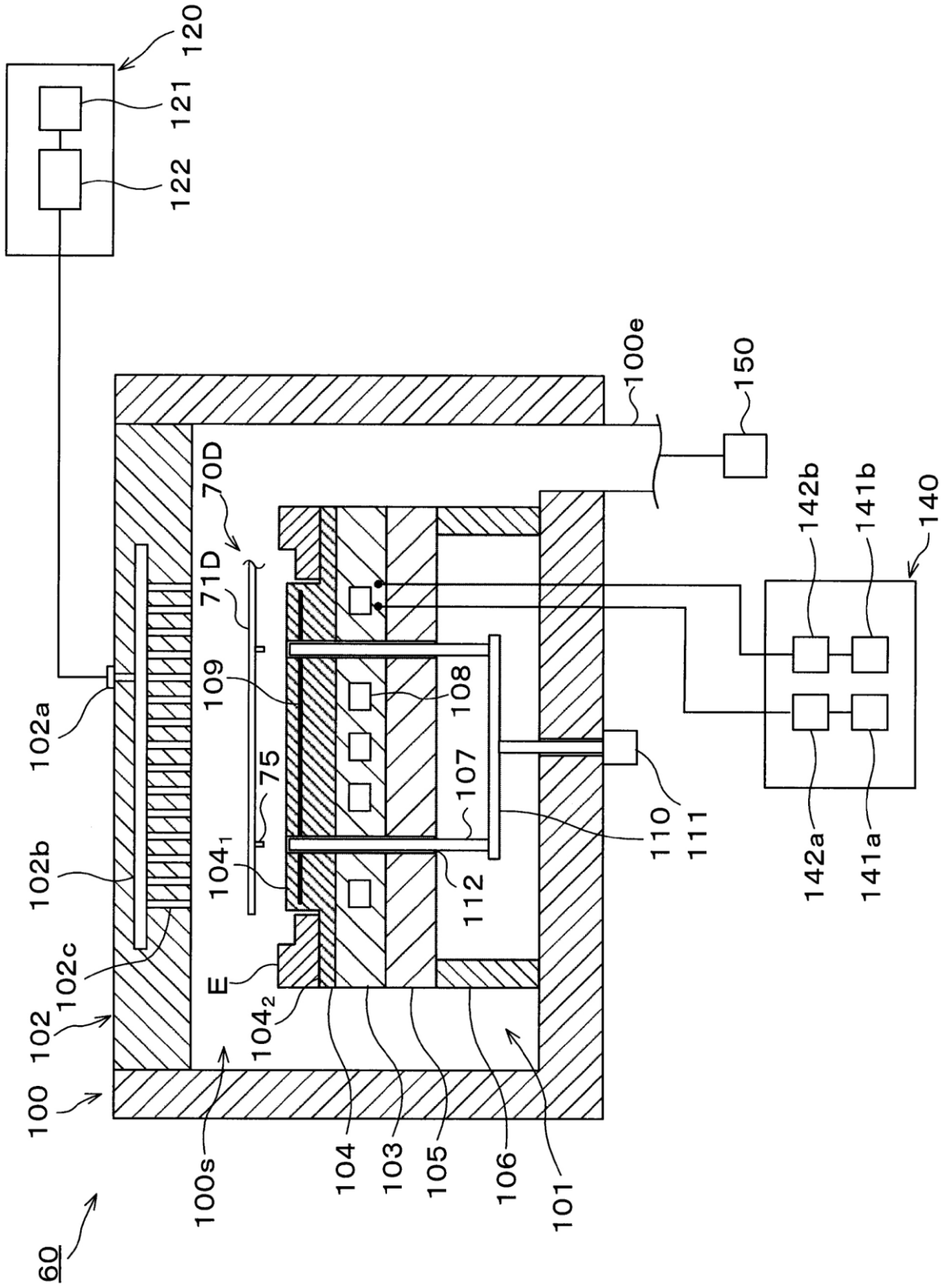
120
121
122
100e
150
70D
71D
142b
141b
140
109
108
102a
75
107
110
111
102b
104_1
112
142a
141a
102c
E
102
104_2
100
100s
104
103
105
106
101
60

FIG. 13

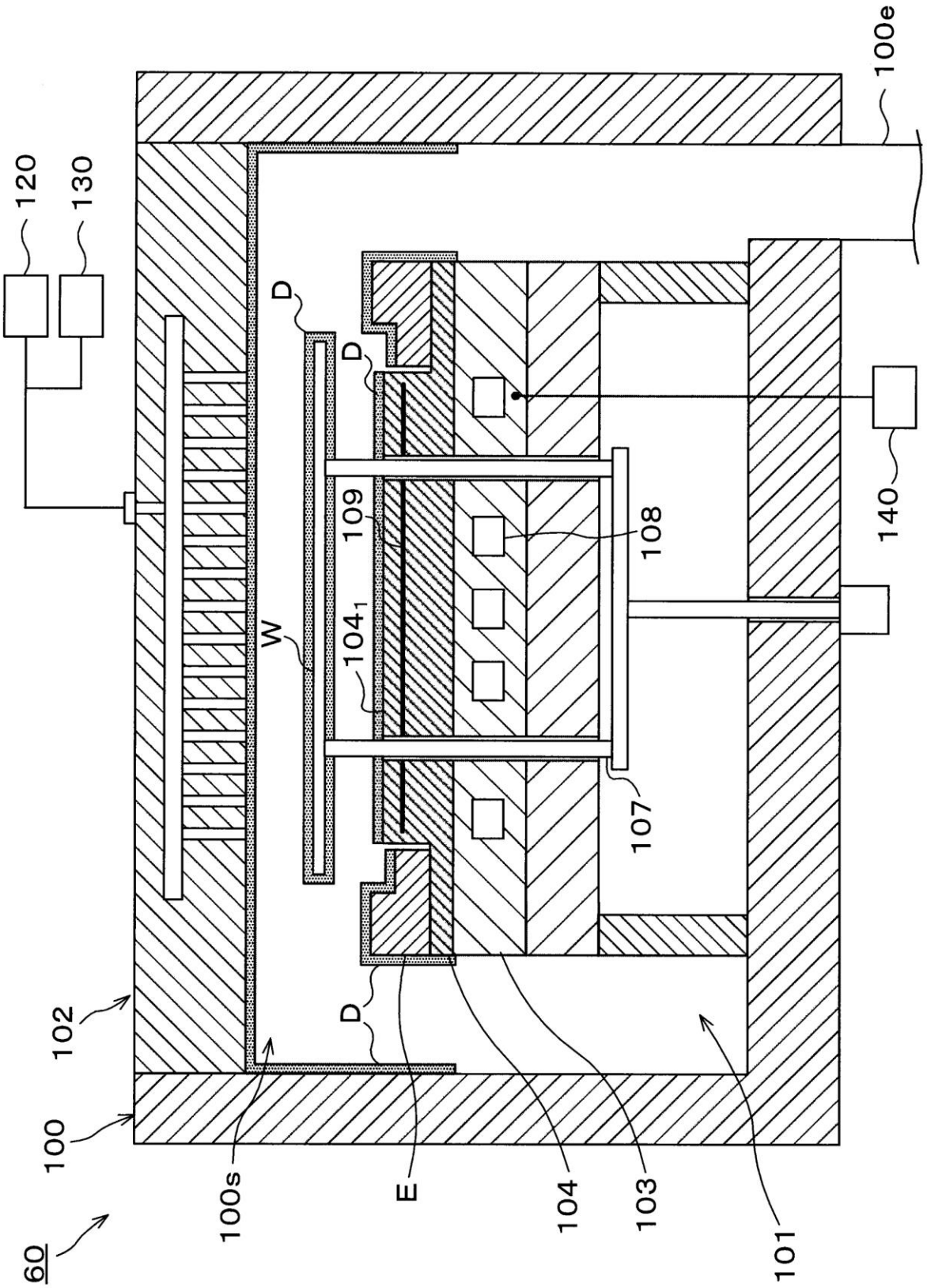
60
100
102
100s
E
104
103
101
D
D
D
W
104₁
109
108
107
140
120
130
100e

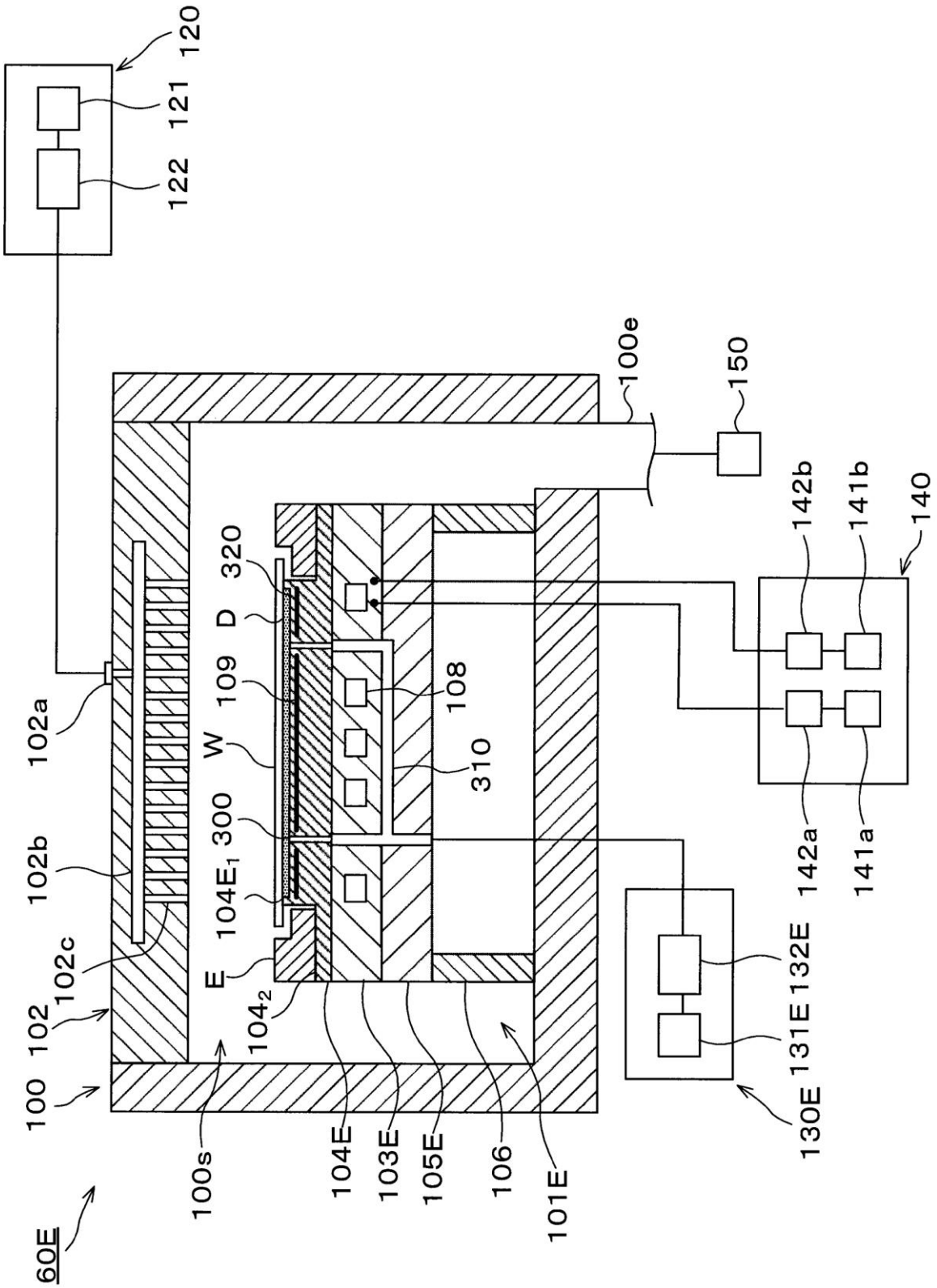
120
121
122
100e
150
142b
141b
140
320
D
109
108
W
310
300
104E1
102a
102b
102c
102
100
E
1042
100s
104E
103E
105E
106
101E
142a
141a
132E
131E
130E
60E

FIG. 14

FIG. 15

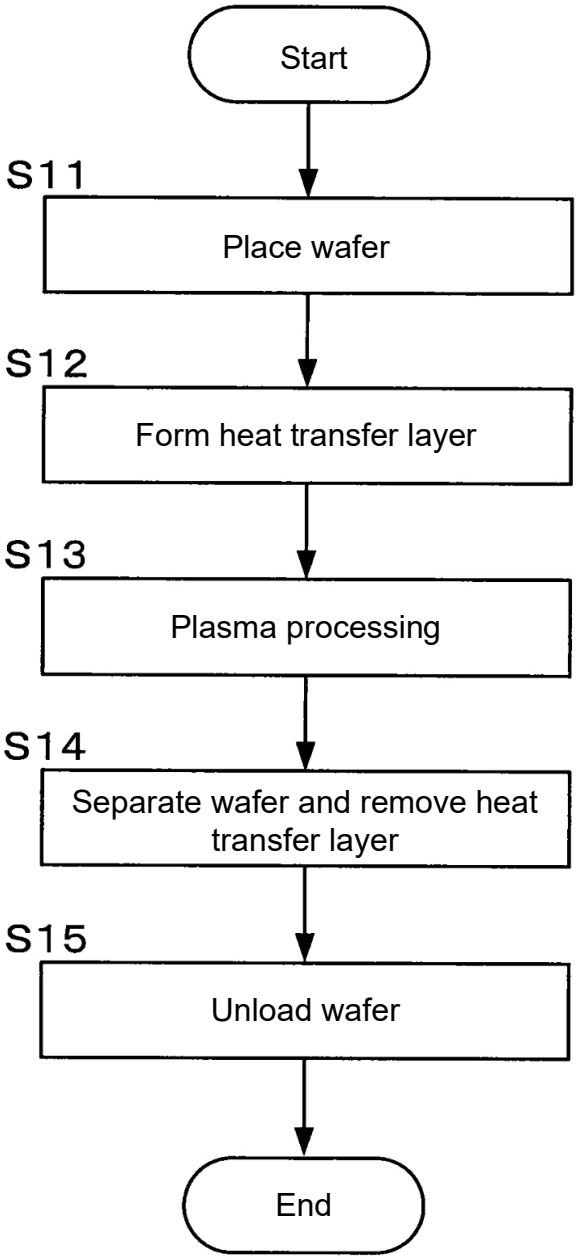
Start
S11
Place wafer
S12
Form heat transfer layer
S13
Plasma processing
S14
Separate wafer and remove heat transfer layer
S15
Unload wafer
End

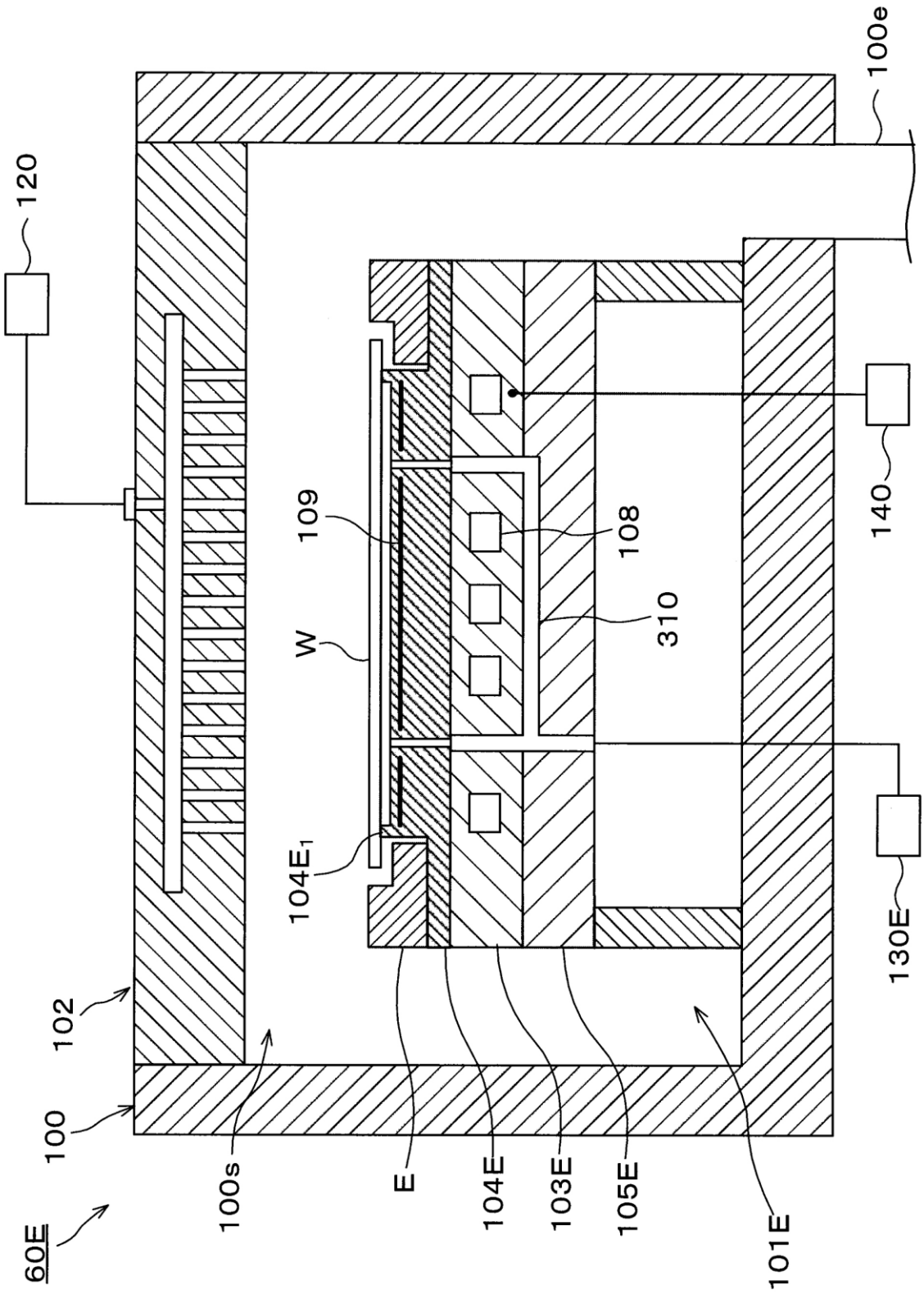
120
100e
109
108
310
W
140
104E1
130E
102
100
100s
E
104E
103E
105E
101E
60E

FIG. 16

FIG. 17

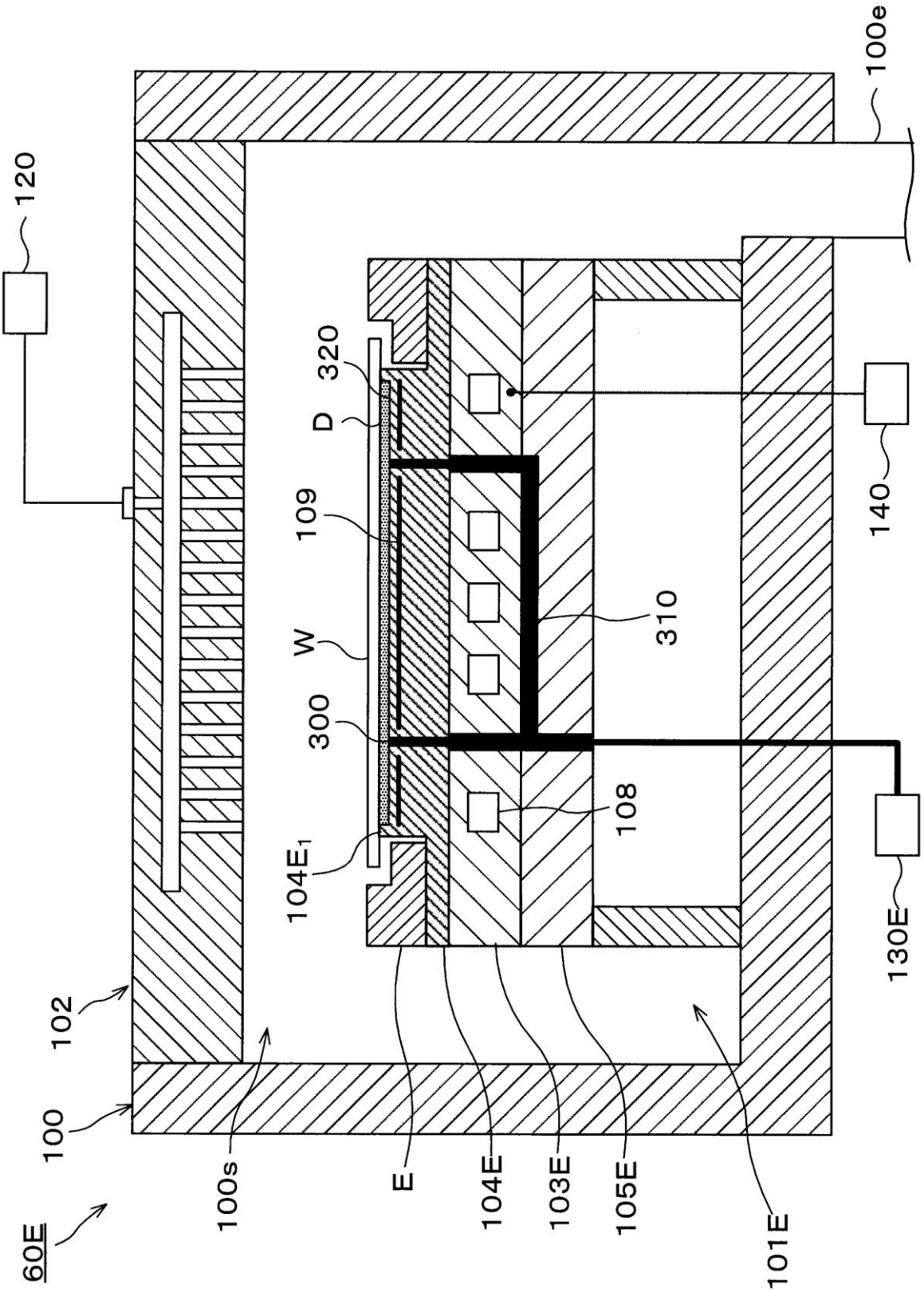
60E
100
102
120
100e
100s
E
104E
103E
105E
101E
104E1
300
W
109
D
320
310
108
140
130E

FIG. 18

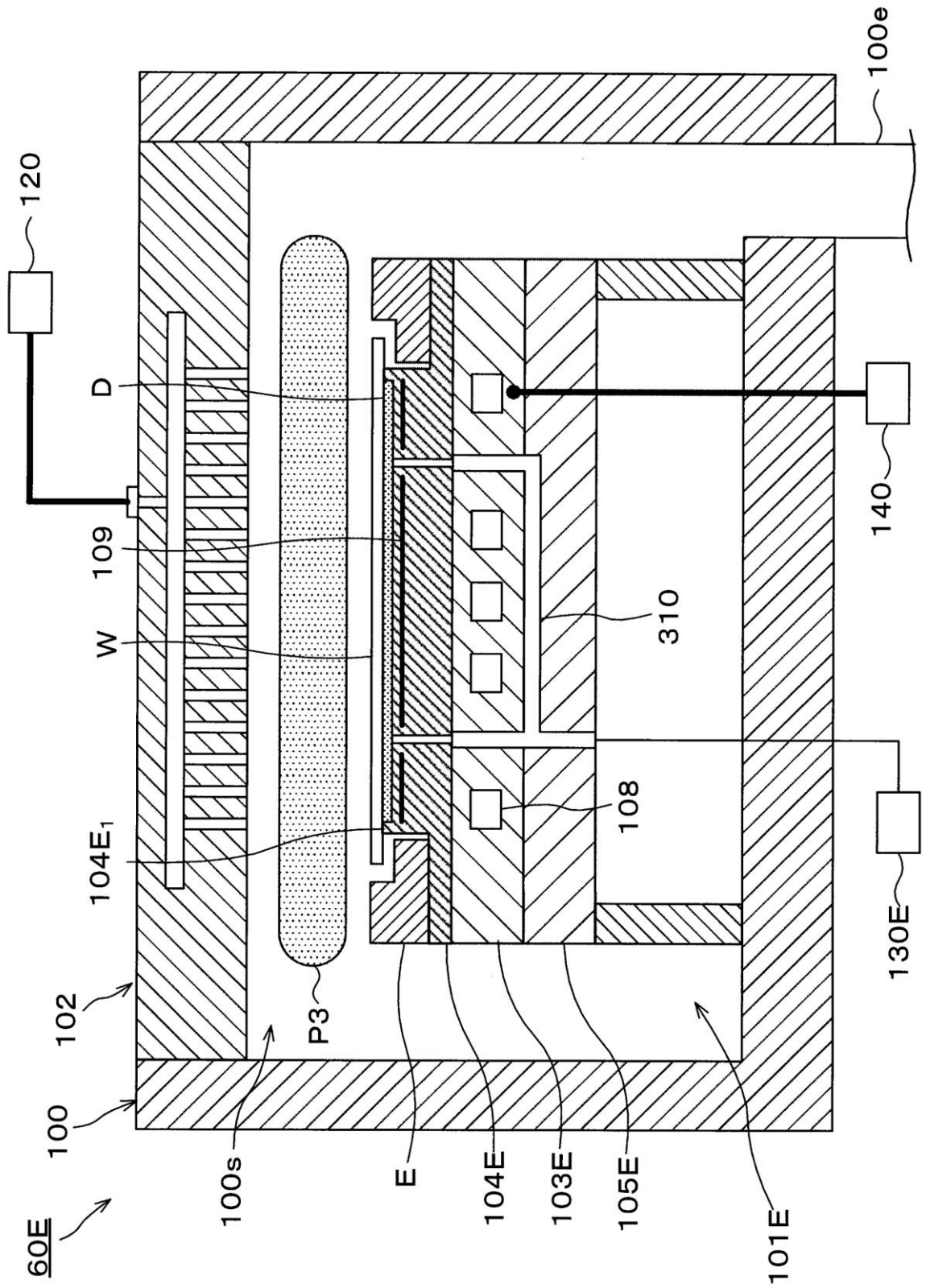
60E
100
102
100s
P3
104E1
W
109
D
120
E
104E
103E
105E
101E
108
310
140
130E
100e

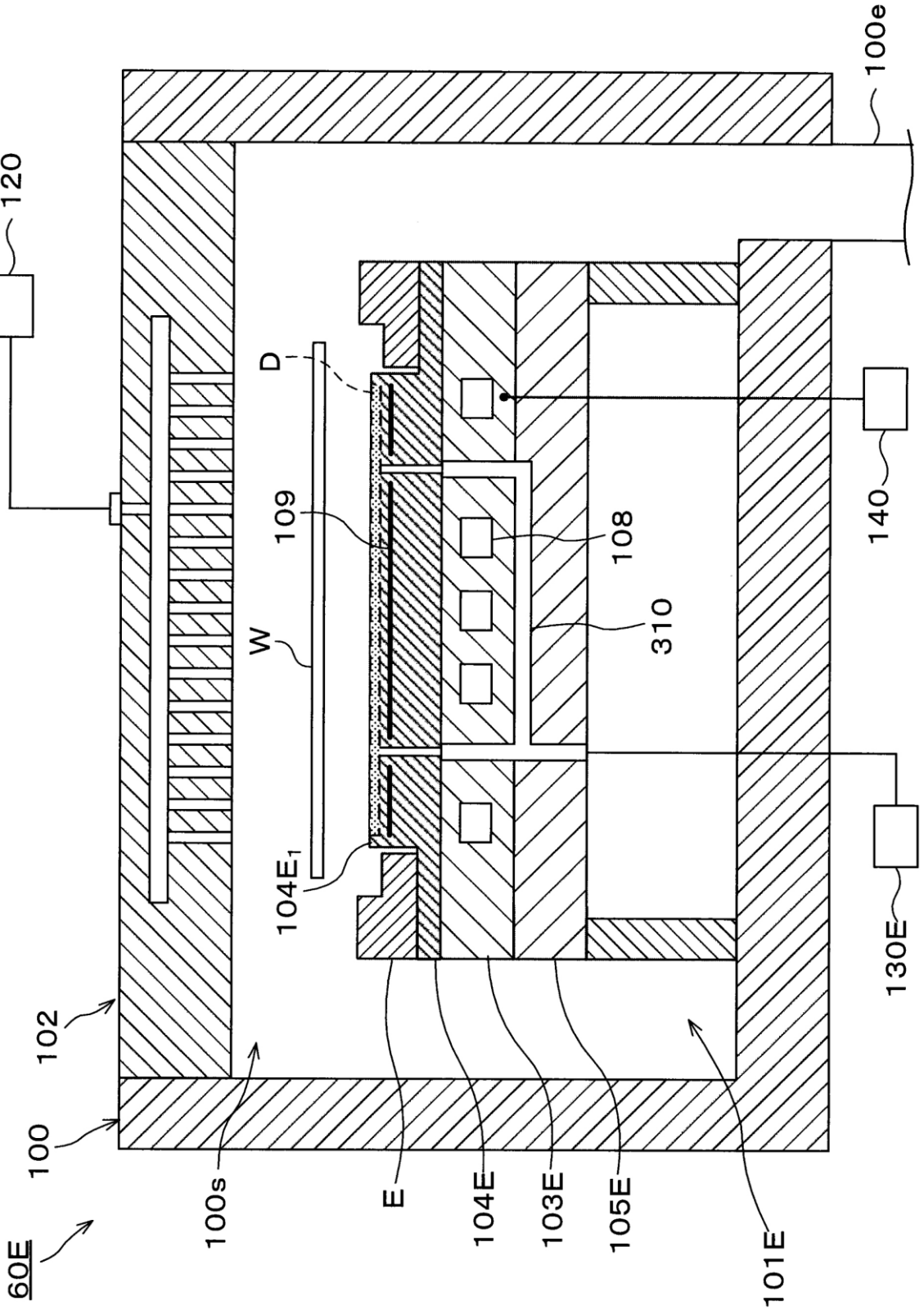
120
100e
D
109
108
310
W
140
104E1
130E
102
100
100s
E
104E
103E
105E
101E
60E

FIG. 19

FIG. 20

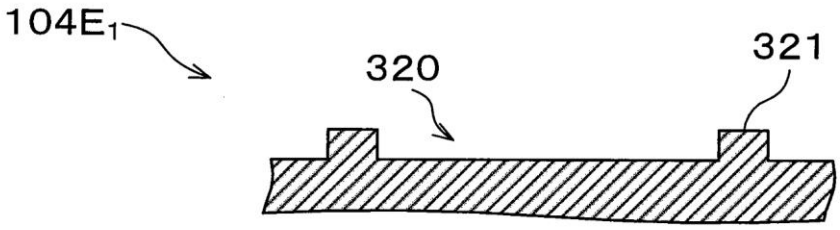

FIG. 21

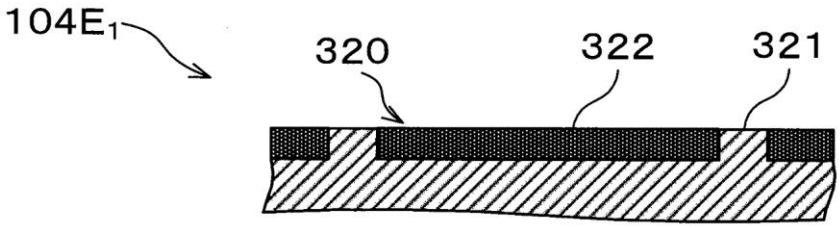

FIG. 22

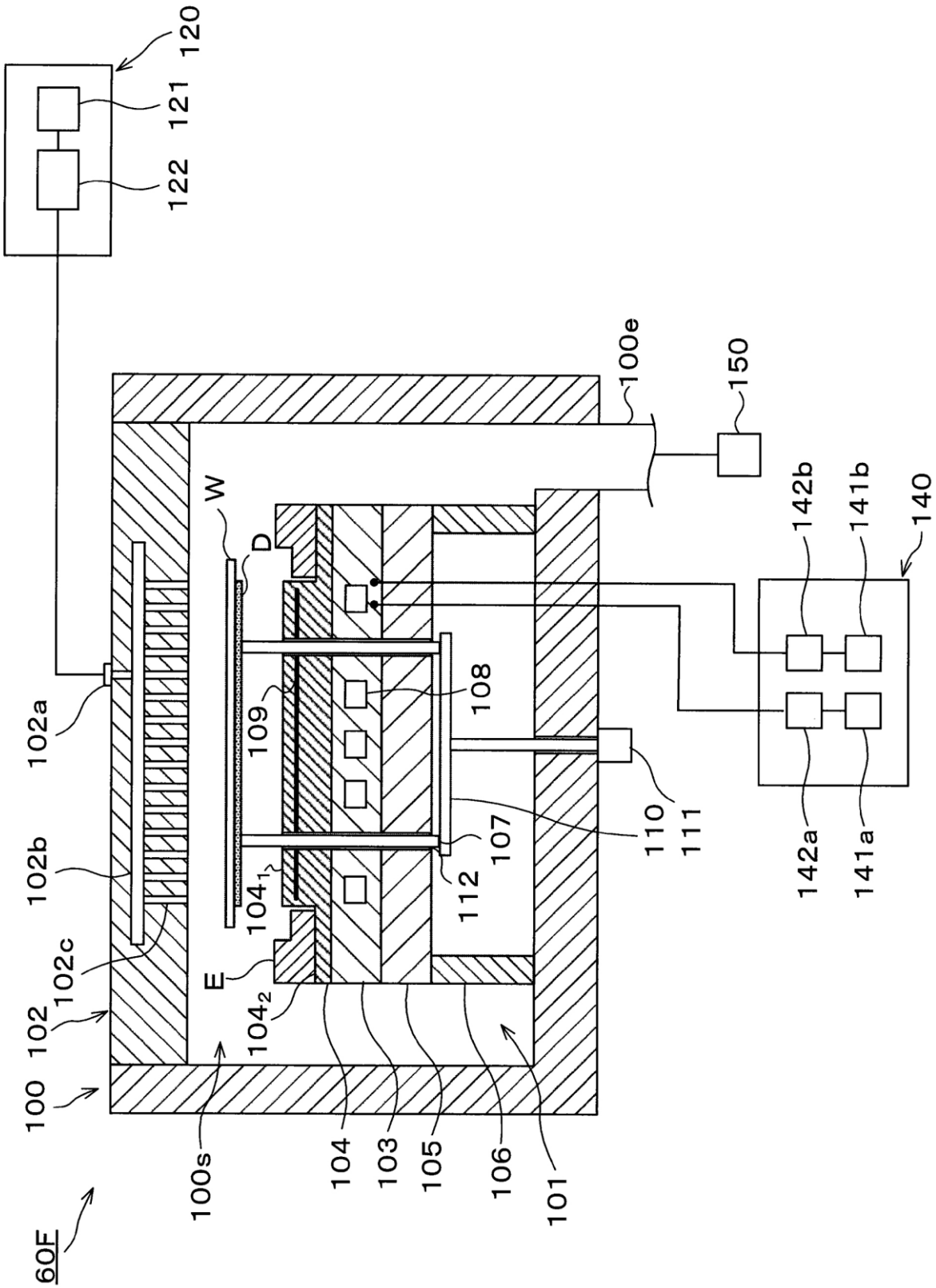
60F
100
102
102a
102b
102c
100s
100e
101
103
104
104_1
104_2
105
106
107
108
109
110
111
112
120
121
122
140
141a
141b
142a
142b
150
W
D
E

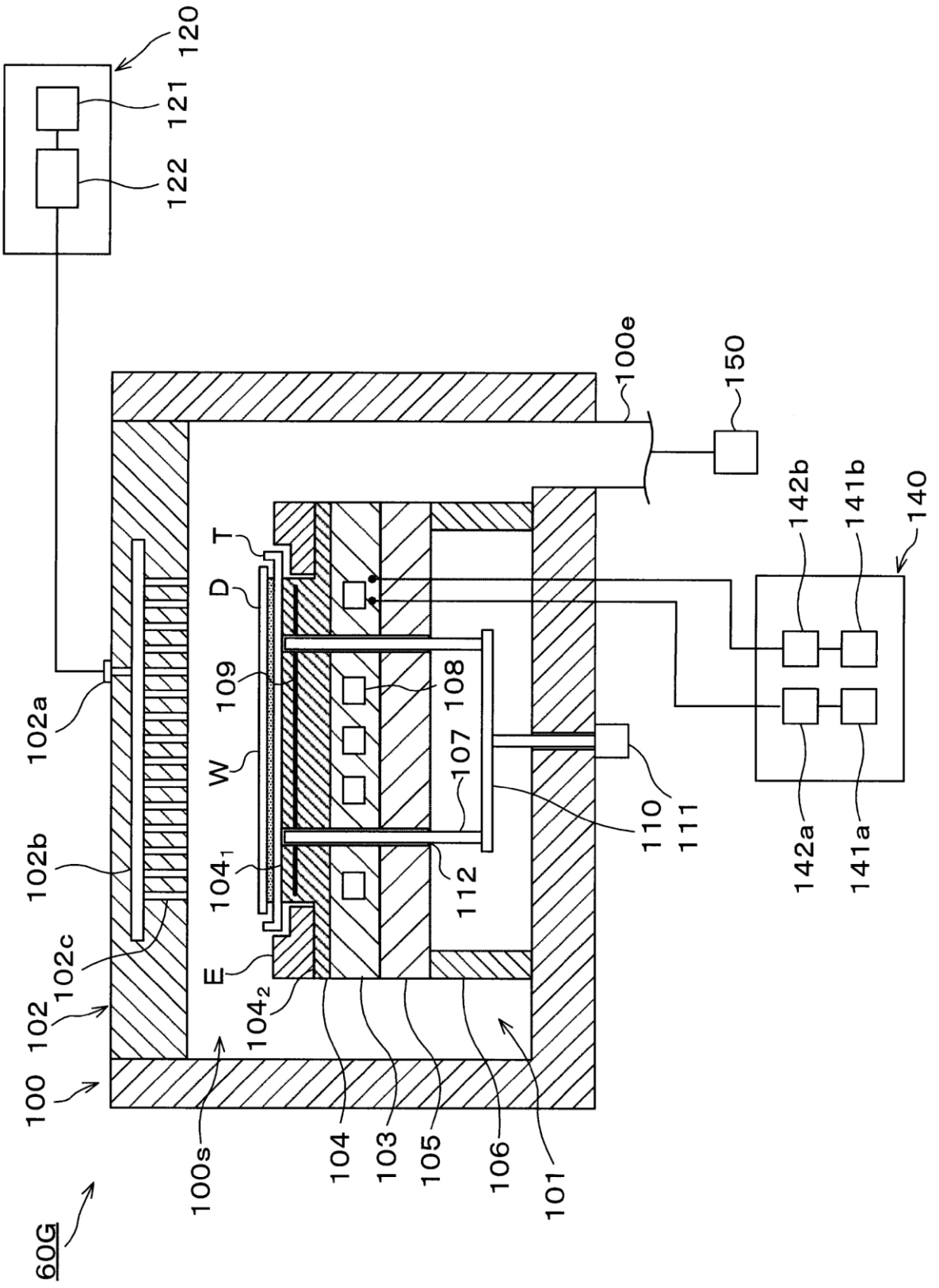
120
121
122
100e
150
142b
141b
140
T
D
109
108
W
107
102a
102b
102c
102
100
104_1
104_2
E
112
110
111
142a
141a
100s
104
103
105
106
101
60G

FIG. 23

FIG. 24

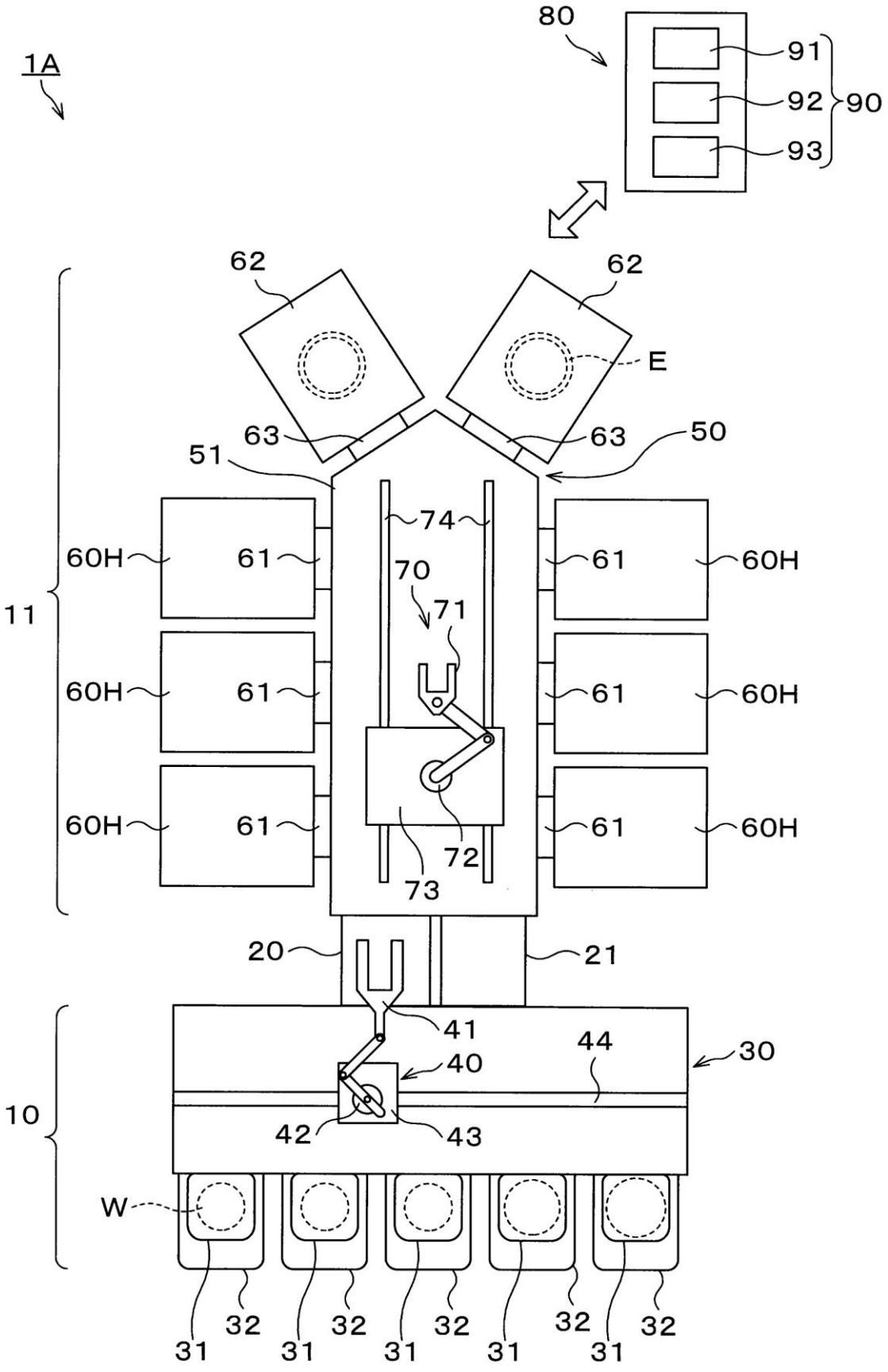
80
91
92
90
93
1A
62
62
E
63
63
50
51
74
60H
61
61
60H
70
71
11
60H
61
61
60H
60H
61
61
60H
72
73
20
21
41
44
30
40
10
42
43
W
32
32
32
32
32
31
31
31
31
31

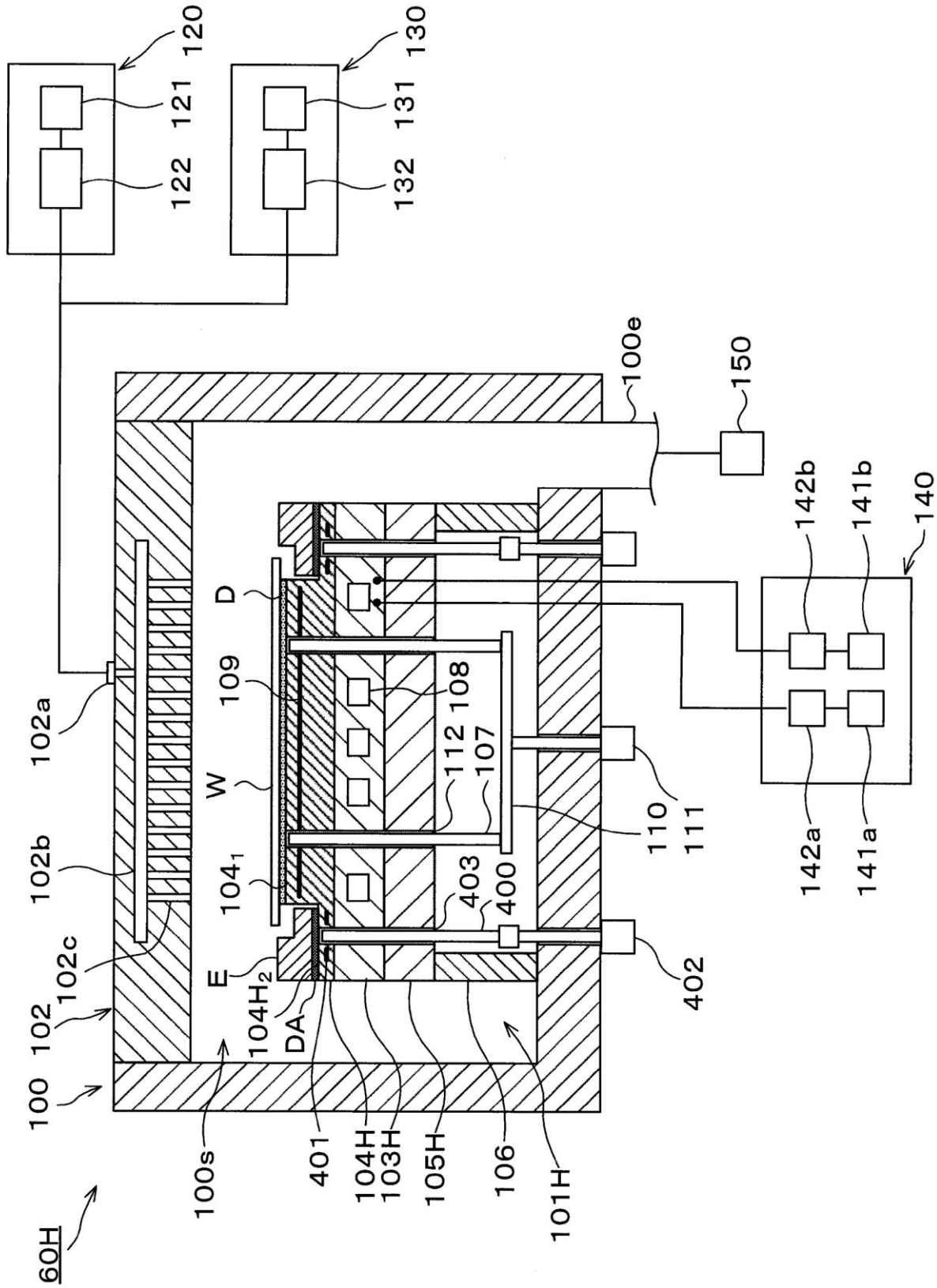
120
121
122
130
131
132
100e
150
140
142b
141b
142a
141a
102a
102b
102c
102
100
109
D
W
104_1
E
$104H_2$
DA
108
112
107
110
111
403
400
402
401
104H
103H
105H
106
101H
100s
60H

FIG. 25

FIG. 26

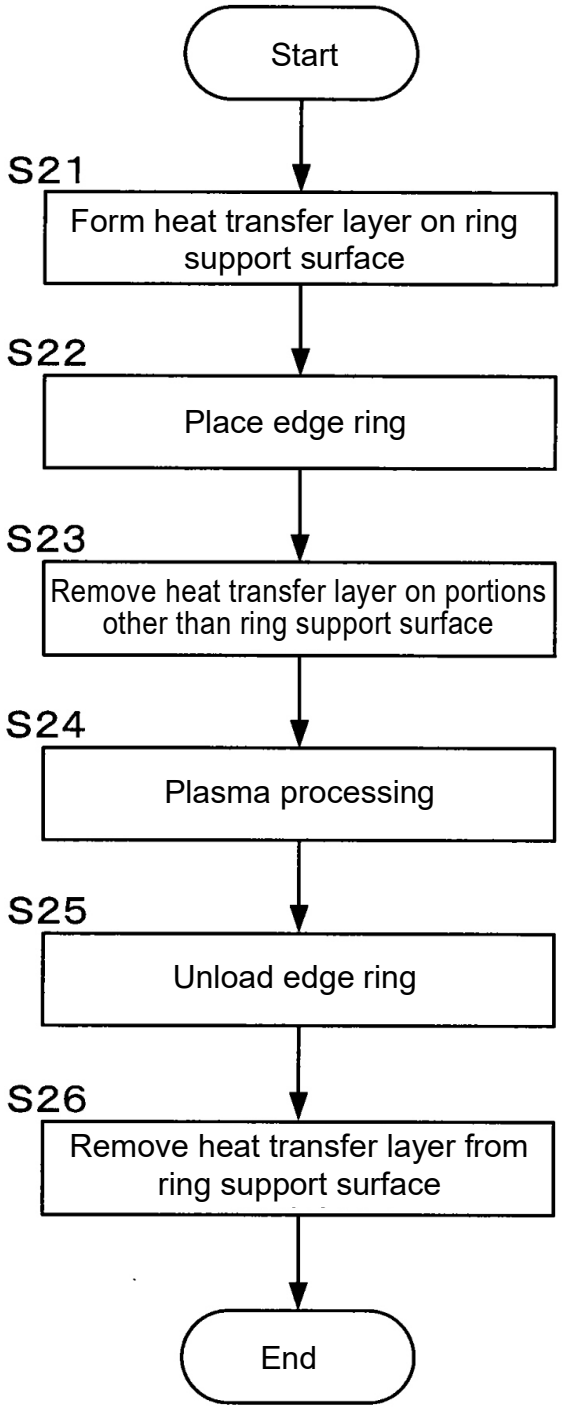
Start
S21
Form heat transfer layer on ring support surface
S22
Place edge ring
S23
Remove heat transfer layer on portions other than ring support surface
S24
Plasma processing
S25
Unload edge ring
S26
Remove heat transfer layer from ring support surface
End

FIG. 27

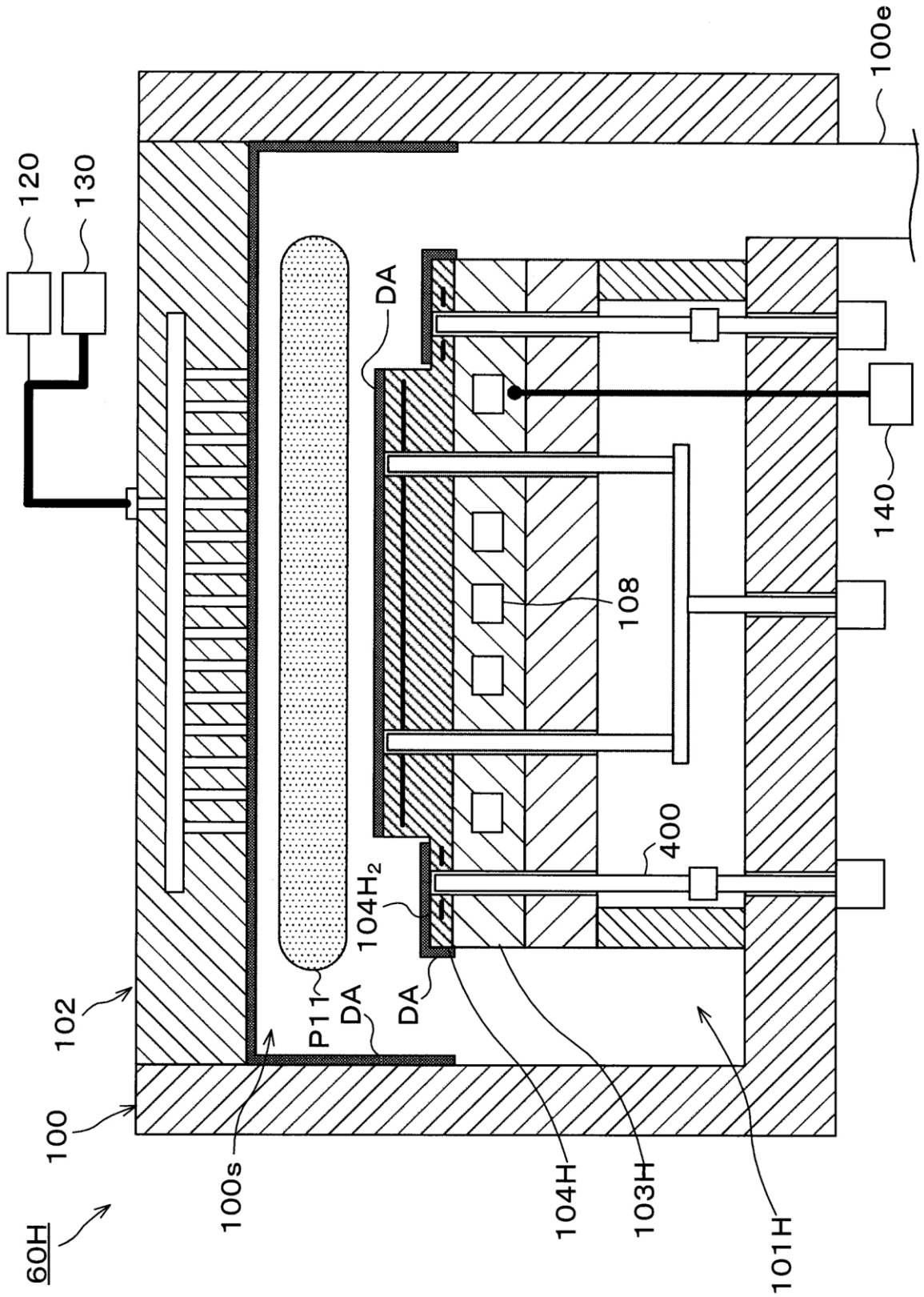
60H
100
102
100s
P11
DA
DA
104H2
DA
104H
103H
101H
108
400
140
120
130
100e

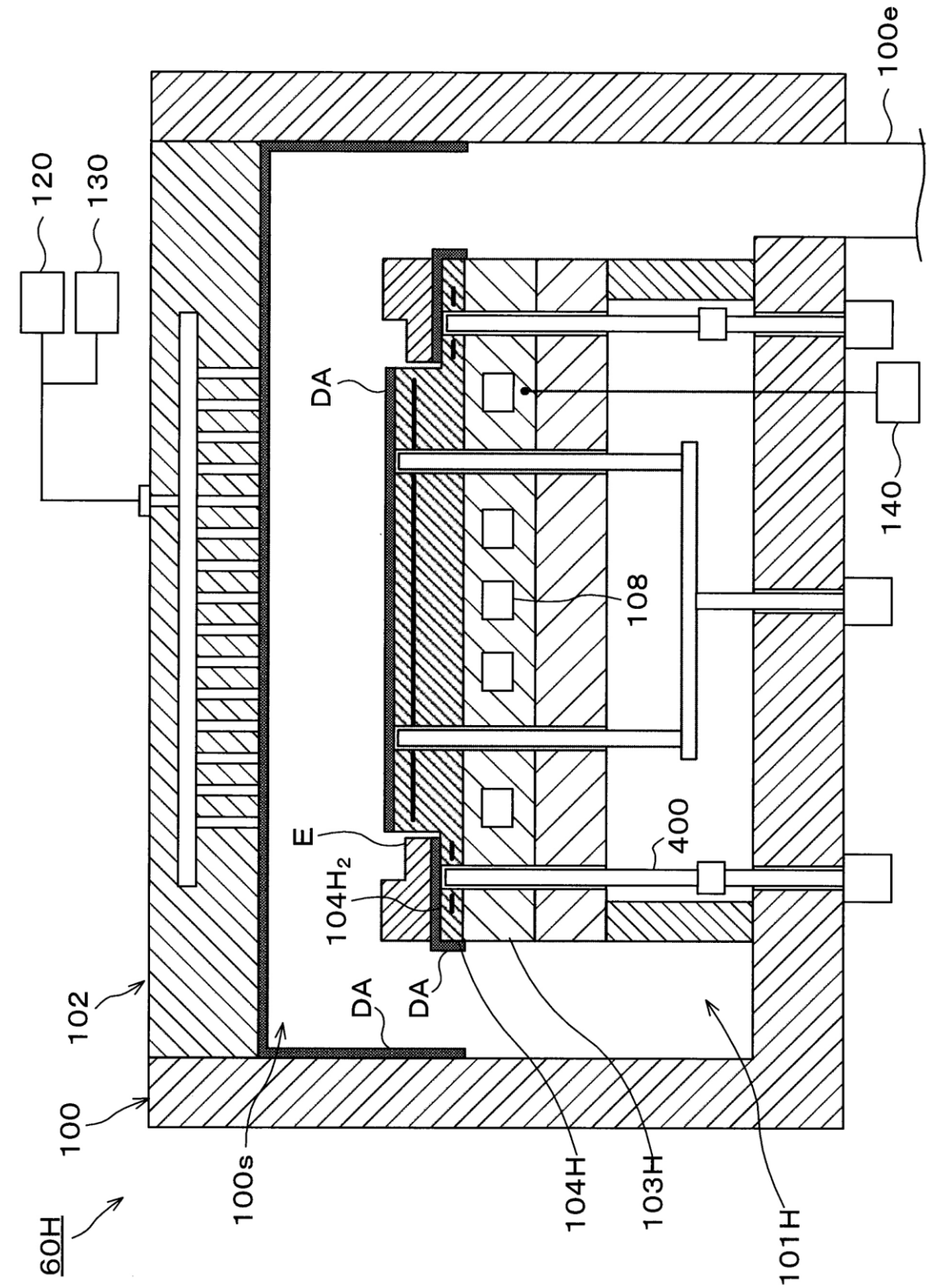
100e
120
130
DA
140
108
E
400
104H2
DA
DA
102
100
100s
104H
103H
101H
60H

FIG. 28

FIG. 29

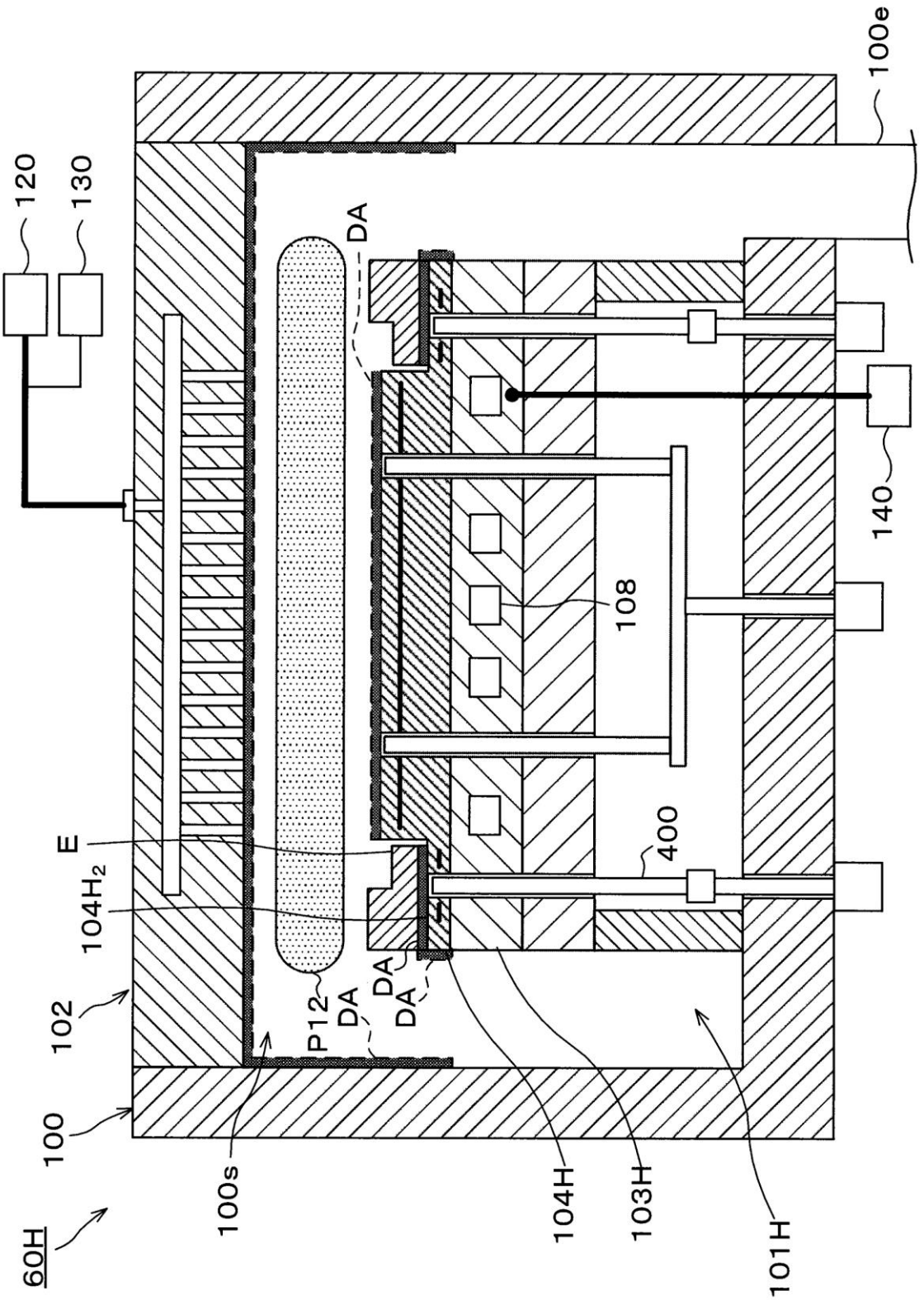
60H
100
102
104H2
E
100s
P12
DA
DA
DA
DA
104H
103H
101H
108
400
140
120
130
100e

FIG. 30

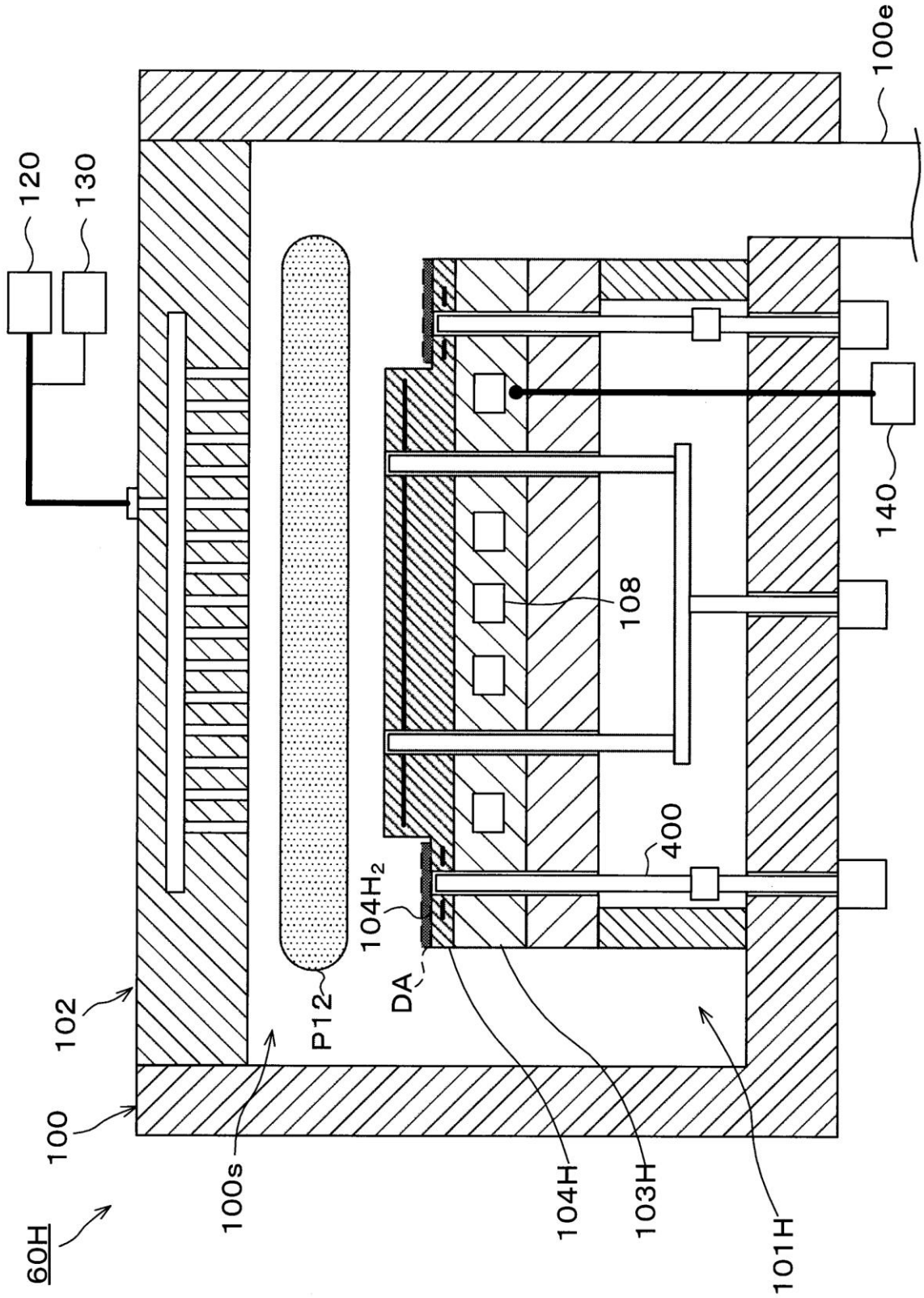
60H
100
102
100s
P12
DA
104H2
104H
103H
101H
108
400
140
120
130
100e

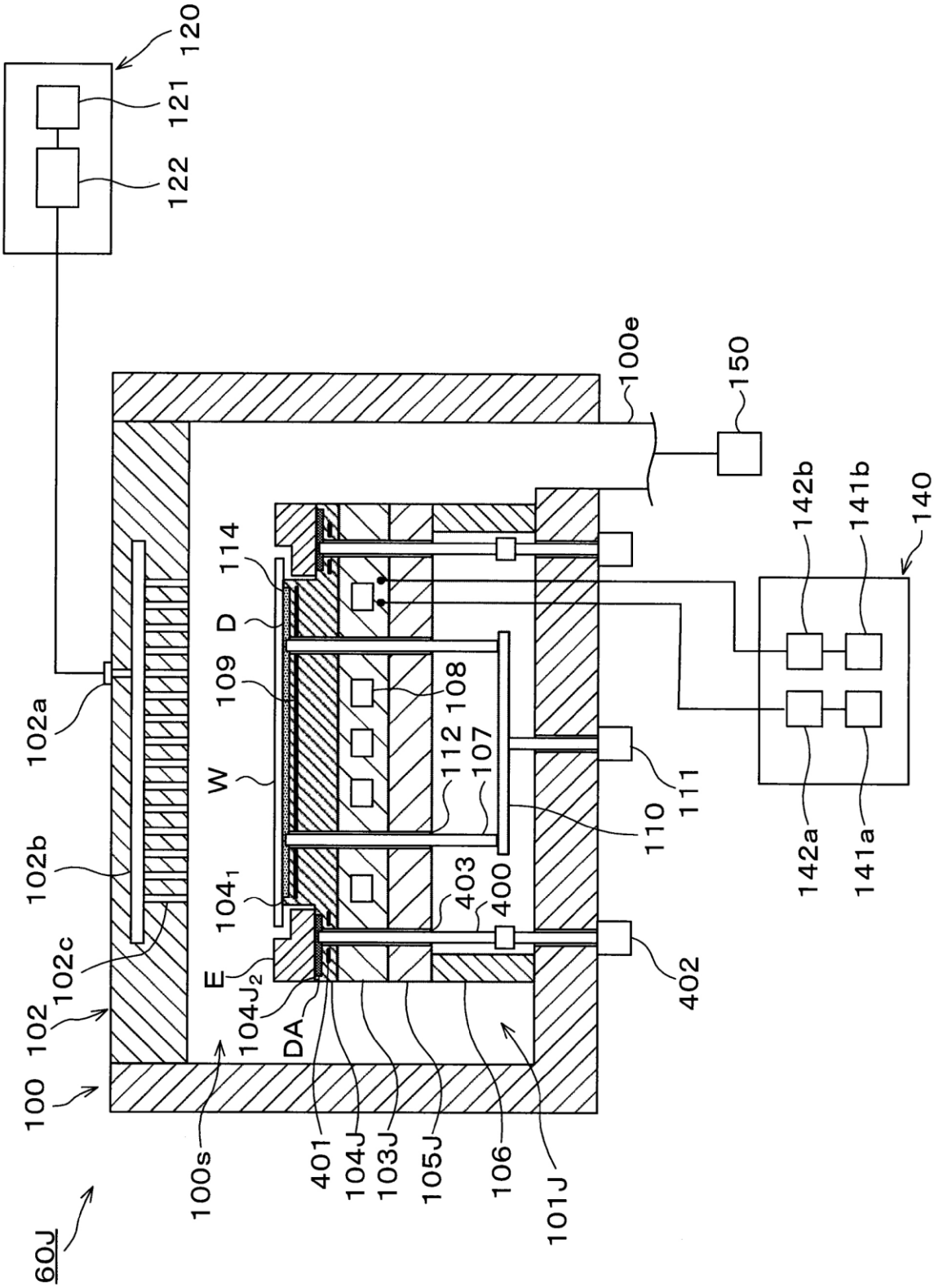
120
121
122
100e
150
142b
141b
140
114
D
109
108
112
107
W
102a
102b
102c
102
100
104_1
E
$104J_2$
DA
403
400
110
111
402
142a
141a
100s
401
104J
103J
105J
106
101J
60J

FIG. 31

FIG. 32

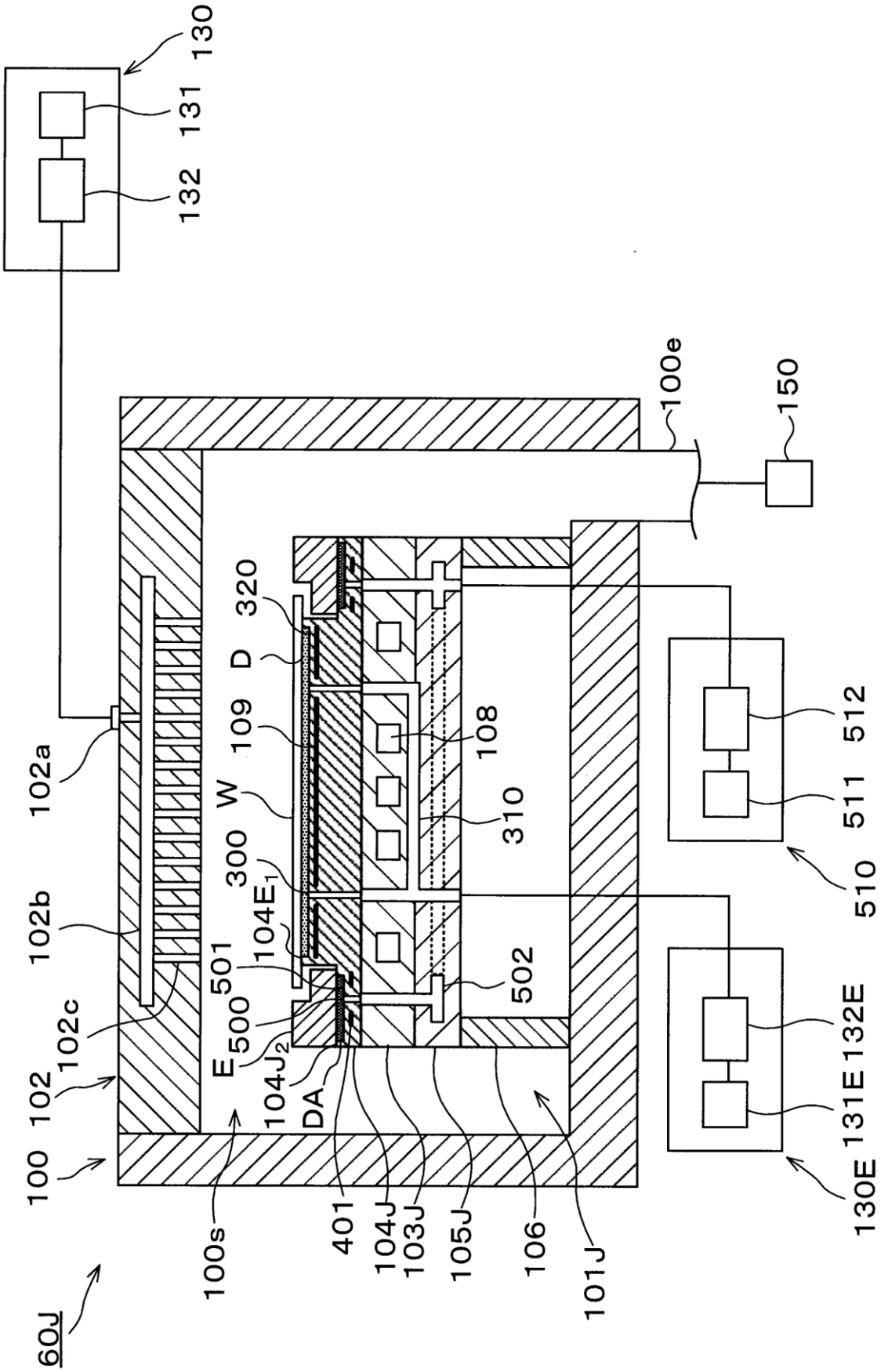
60J
100
102
102a
102b
102c
100s
130
131
132
100e
150
320
D
109
108
W
310
300
104E1
501
500
E
104J2
DA
401
104J
103J
105J
106
101J
502
510
511
512
130E
131E
132E

FIG. 33

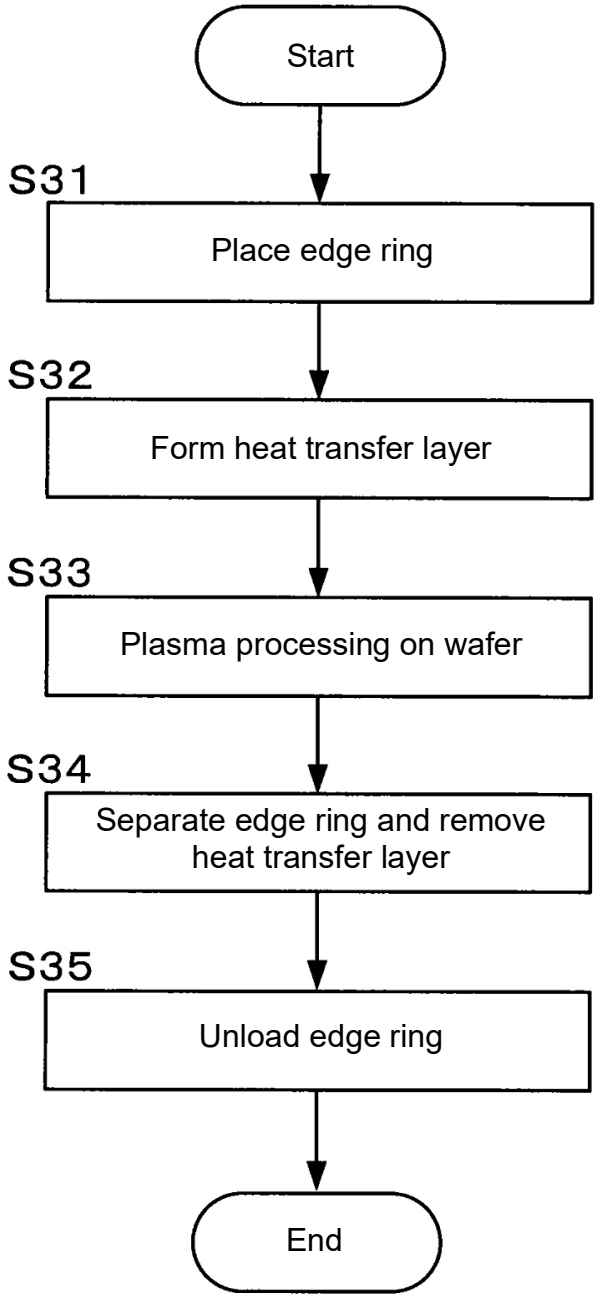
Start
S31
Place edge ring
S32
Form heat transfer layer
S33
Plasma processing on wafer
S34
Separate edge ring and remove heat transfer layer
S35
Unload edge ring
End

FIG. 34

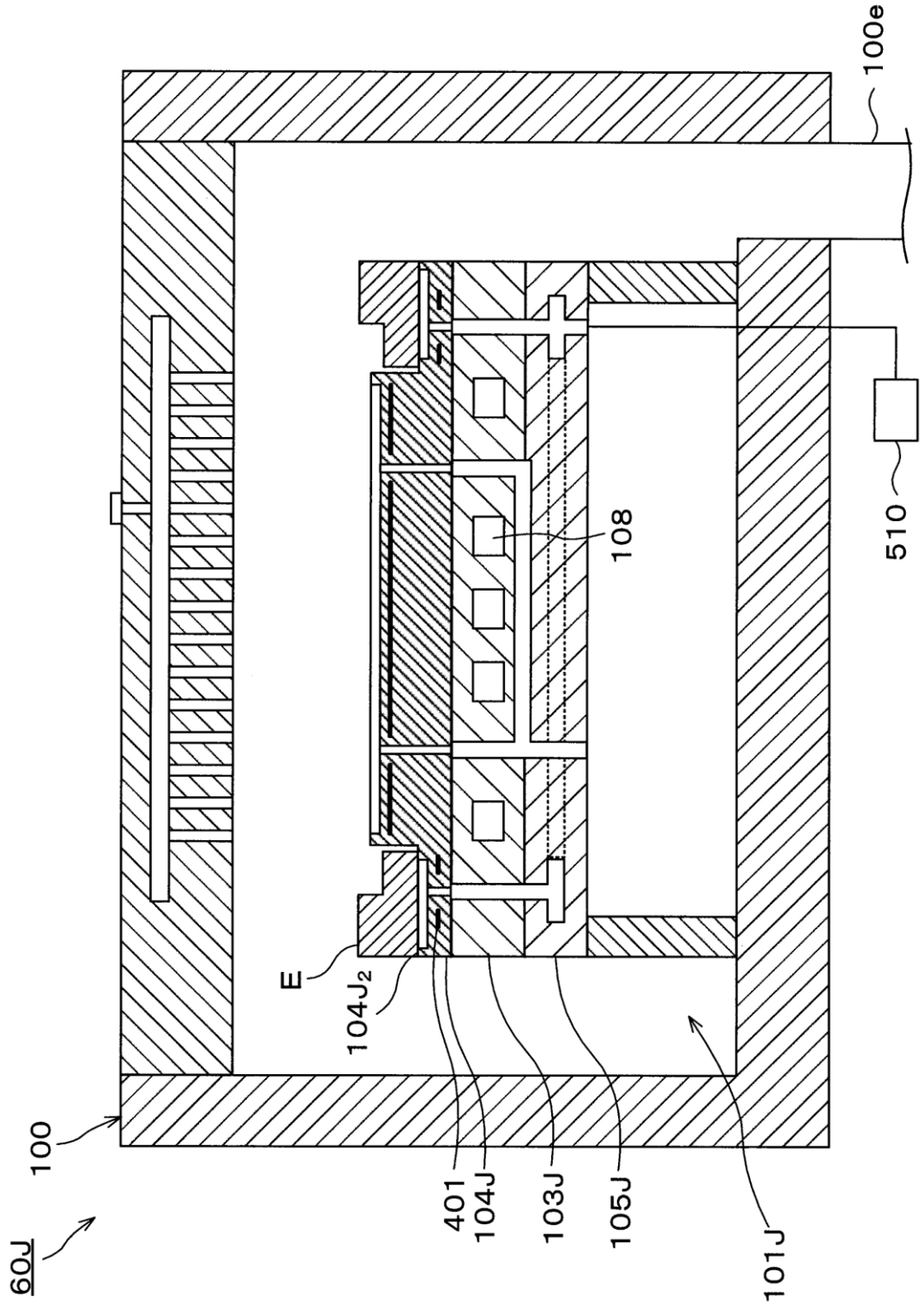

FIG. 35

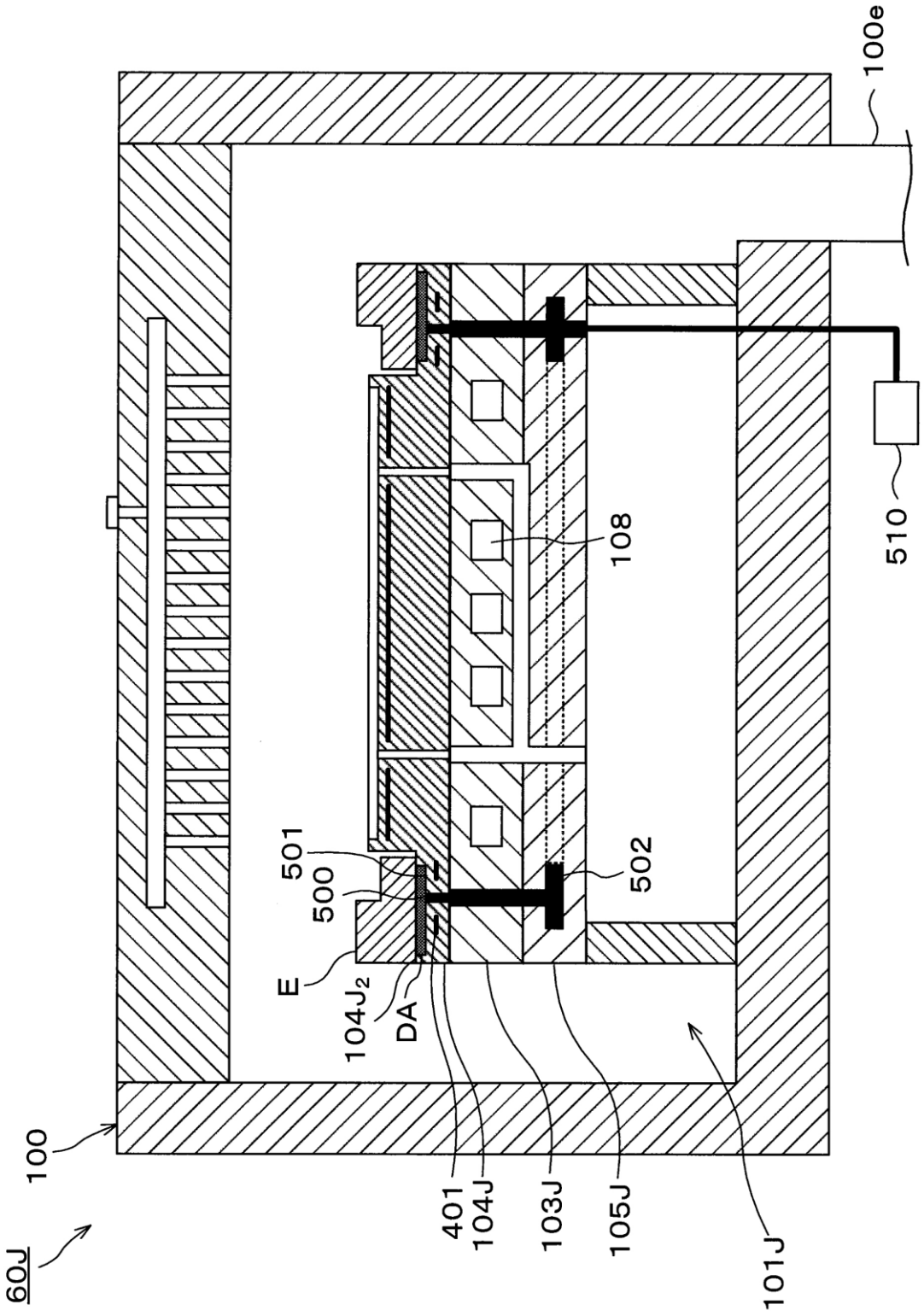
60J
100
100e
510
108
501
500
502
E
104J2
DA
401
104J
103J
105J
101J

FIG. 36

