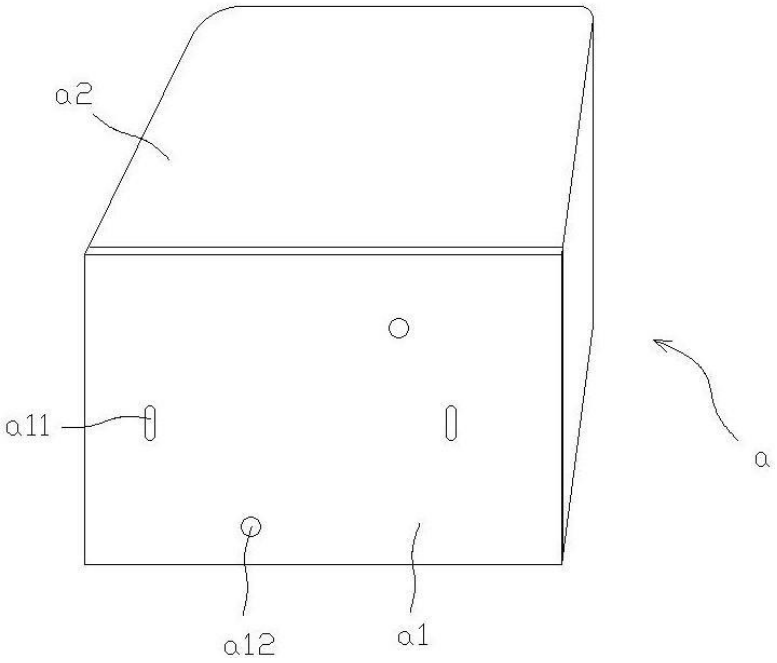

FIG. 1

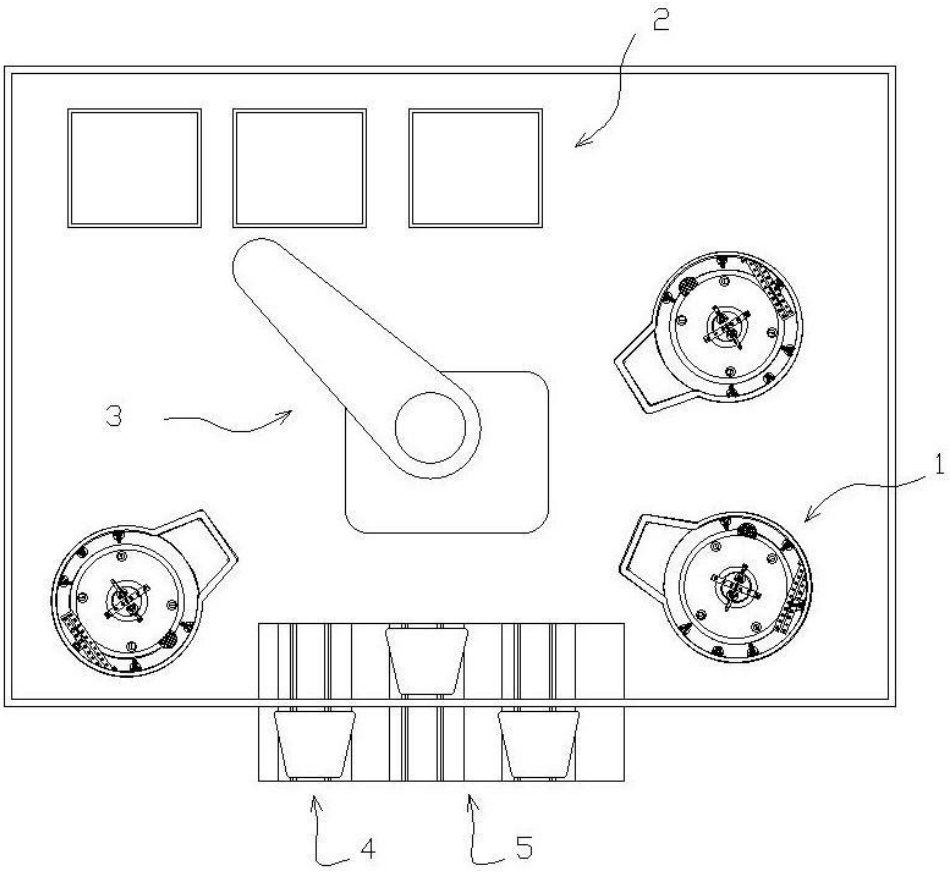

FIG. 2

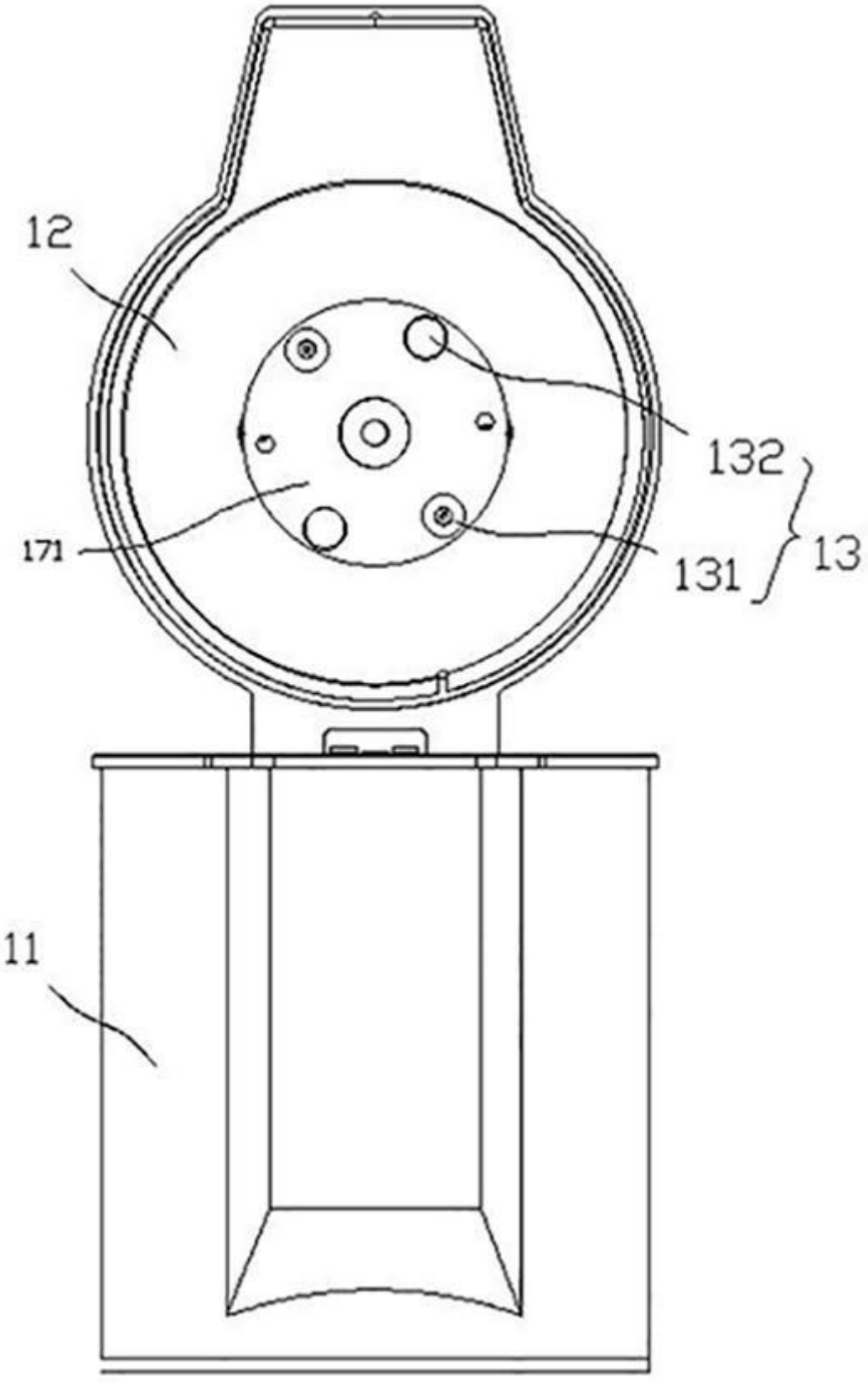

FIG. 3

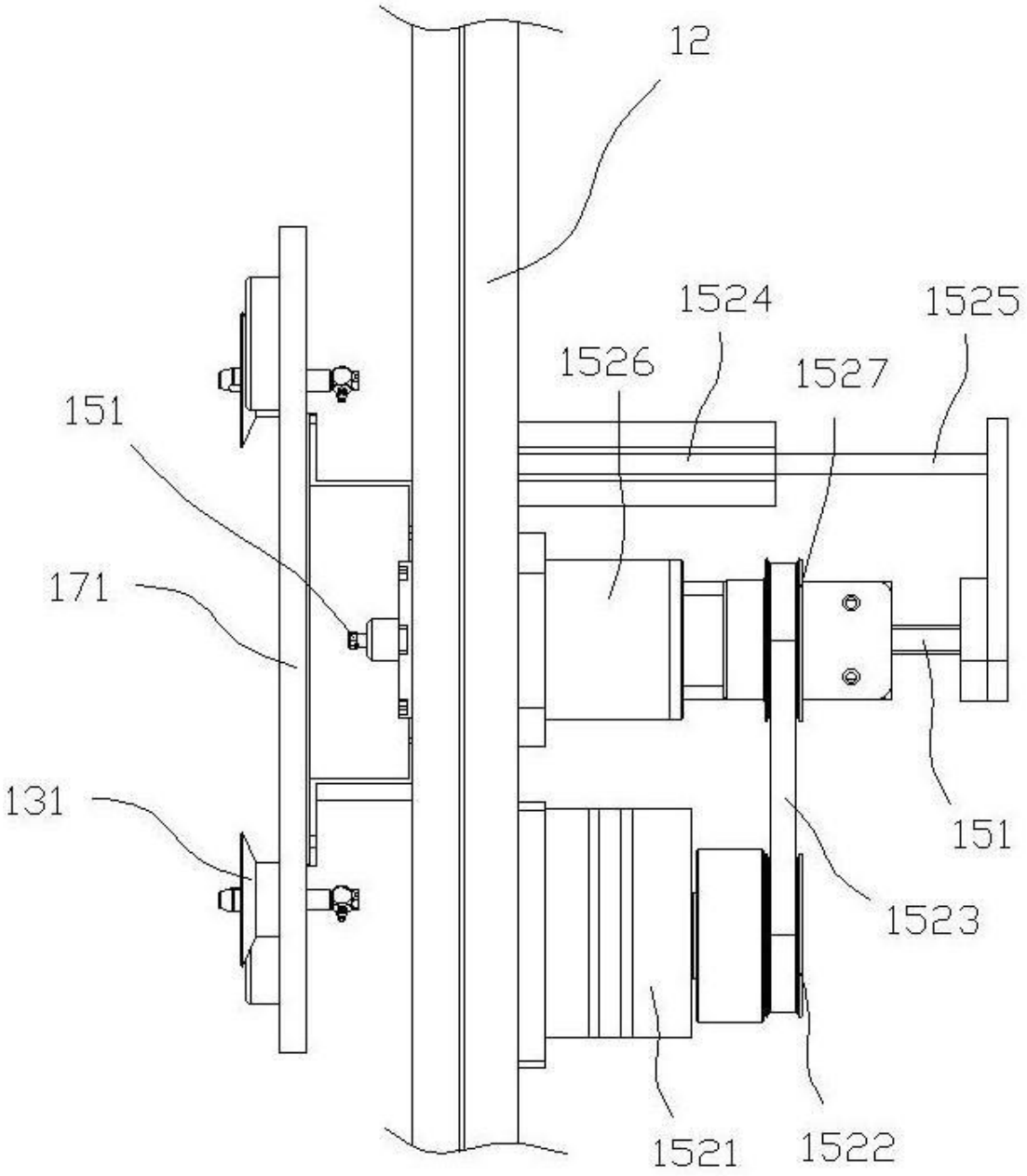

FIG. 4

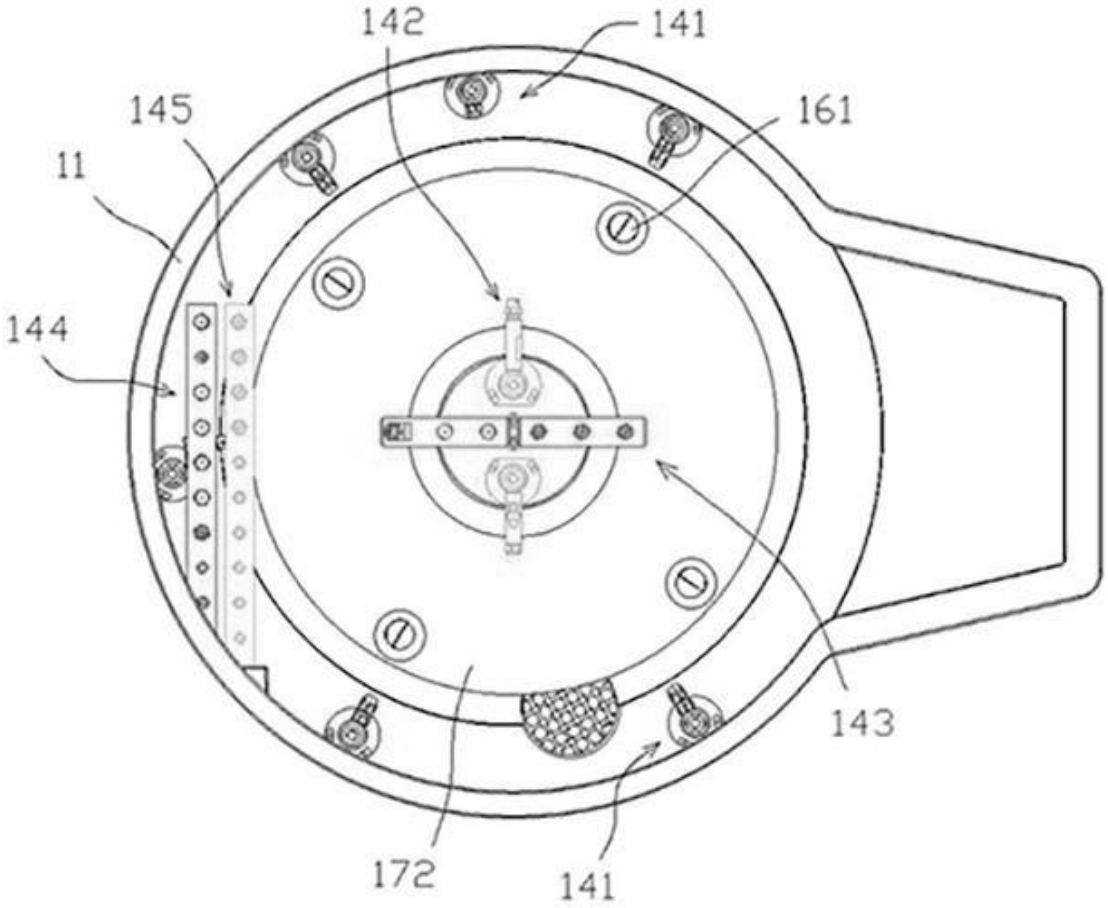

FIG. 5

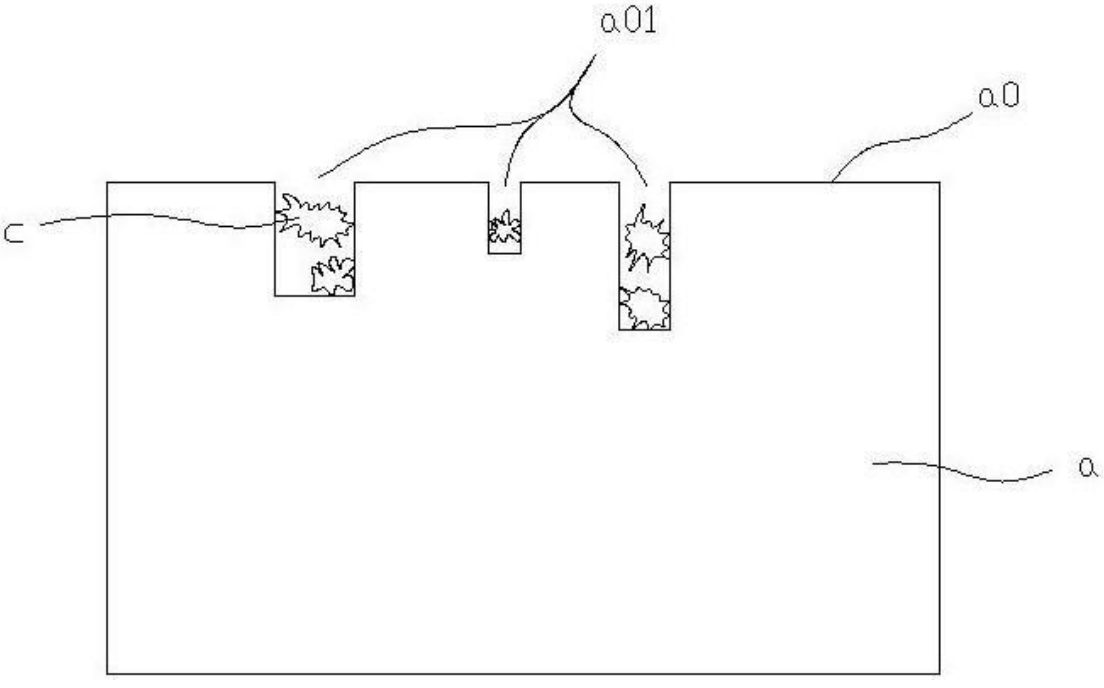

FIG. 6

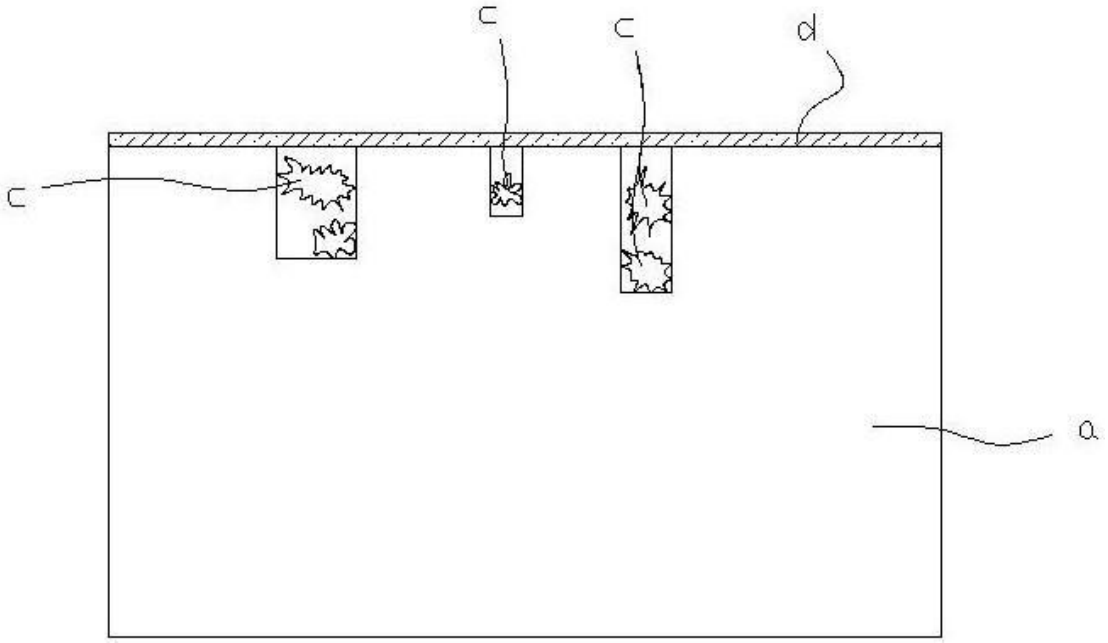

FIG. 7

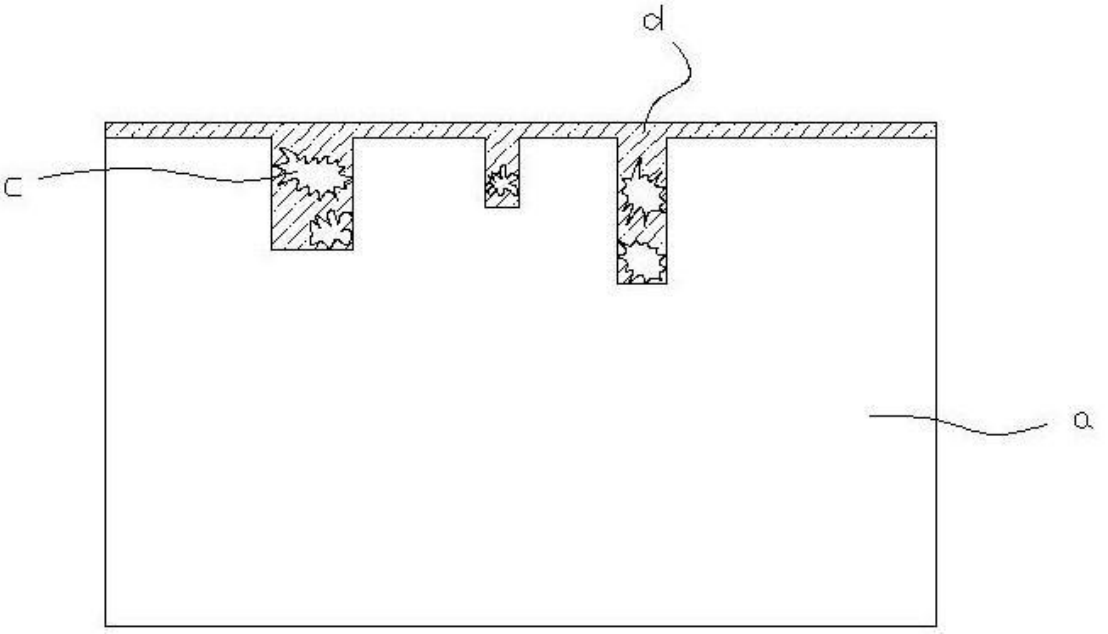

FIG. 8

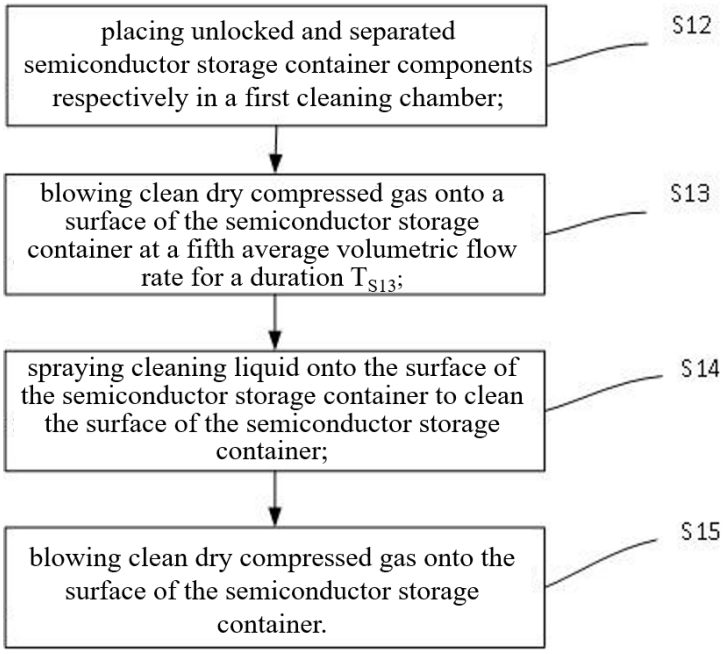

FIG. 9

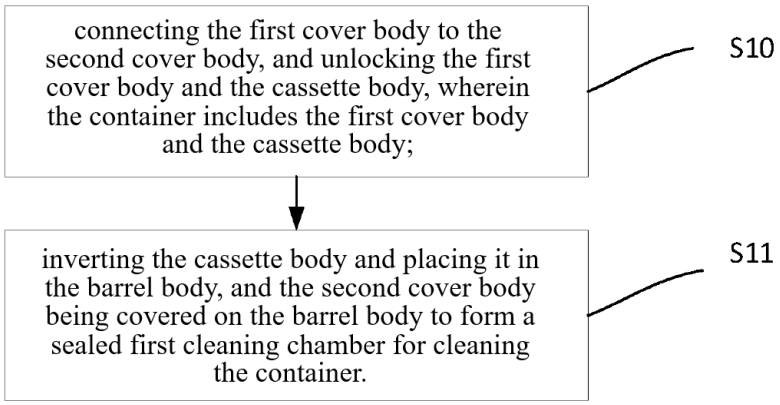

FIG. 10

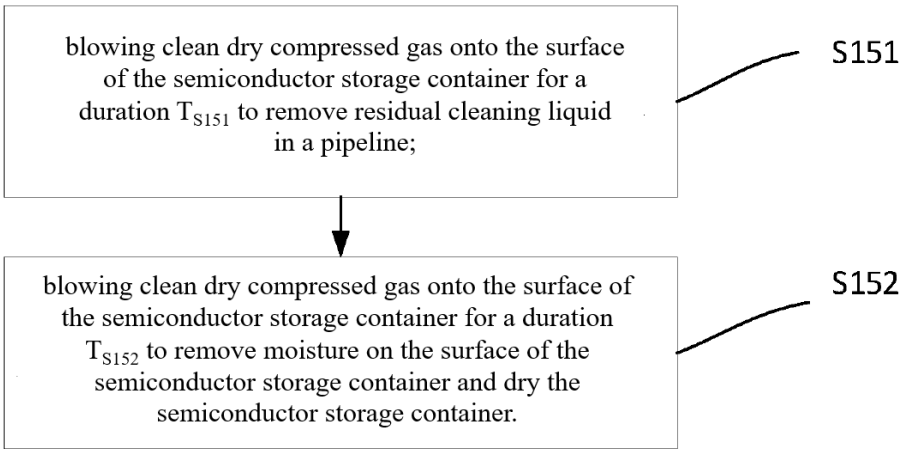

FIG. 11

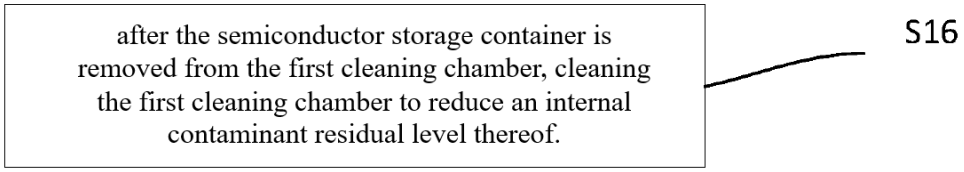

FIG. 12

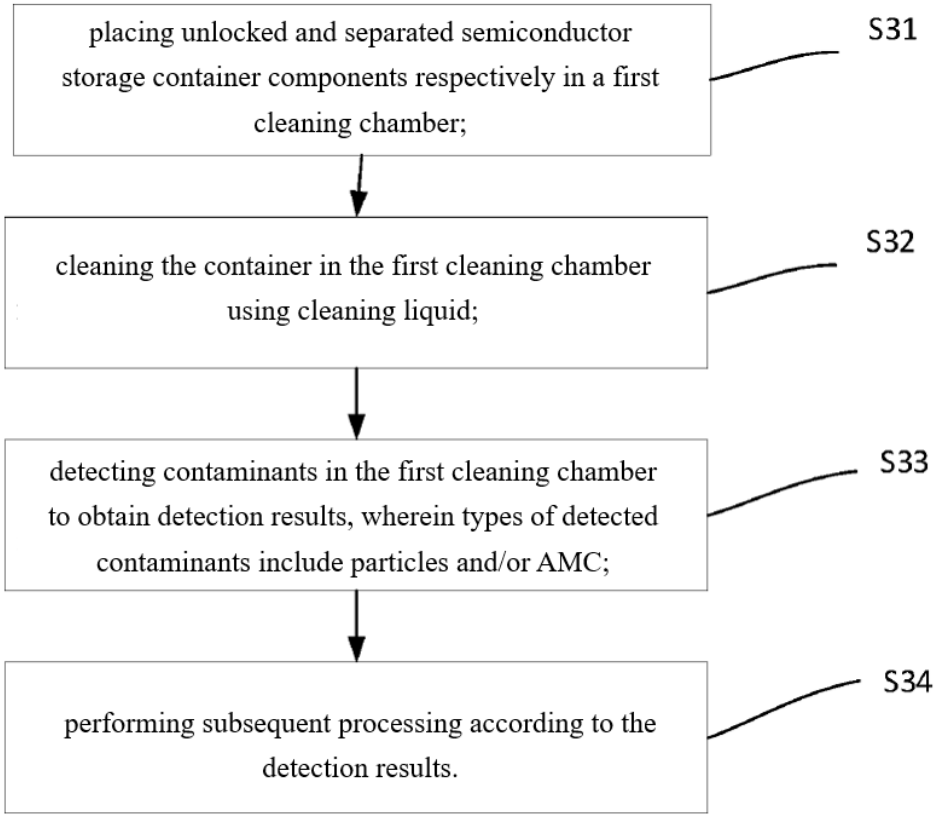

FIG. 13

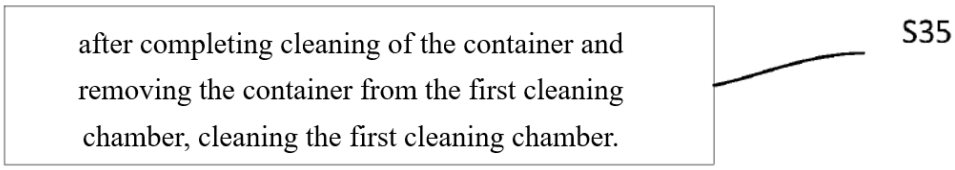

FIG. 14

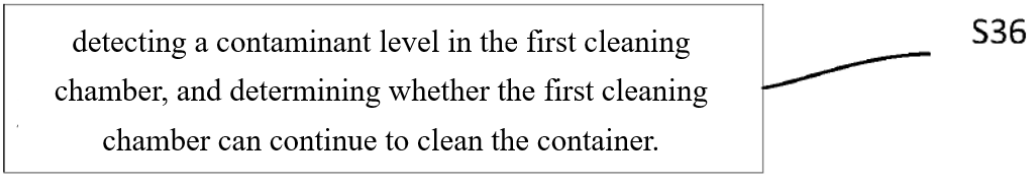

FIG. 15

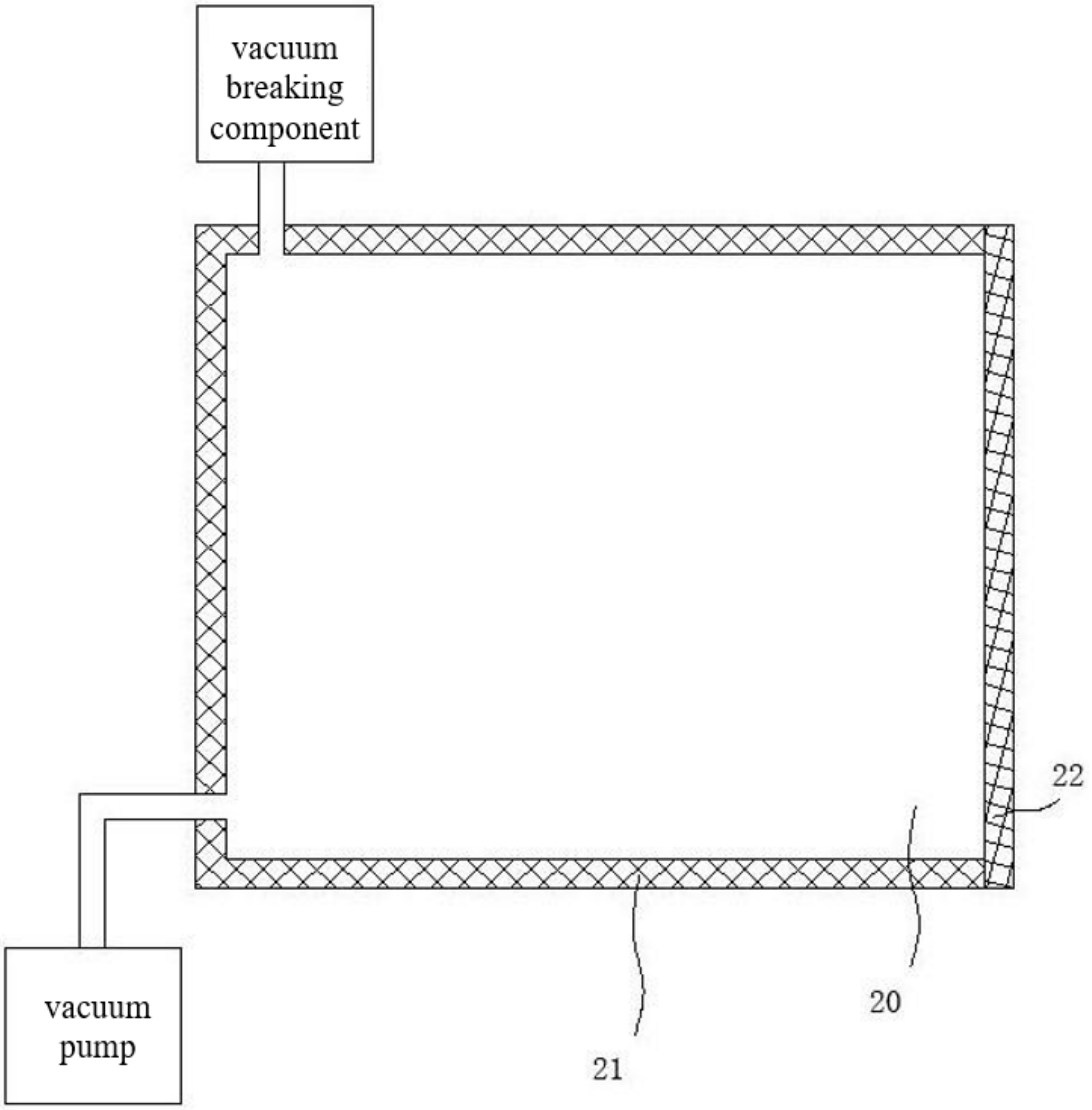

FIG. 16

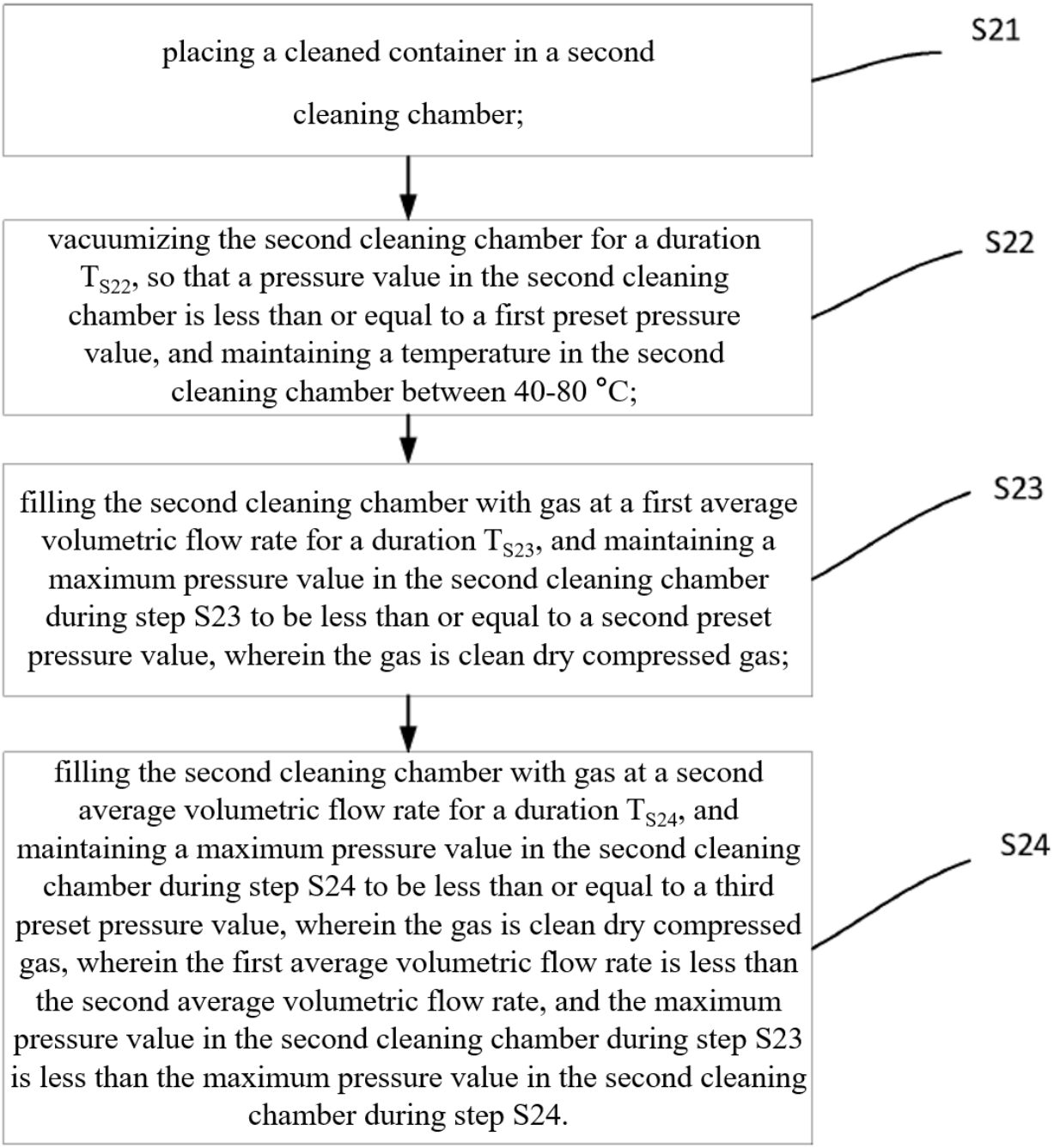
placing a cleaned container in a second cleaning chamber;
S21
vacuumizing the second cleaning chamber for a duration T_{S22}, so that a pressure value in the second cleaning chamber is less than or equal to a first preset pressure value, and maintaining a temperature in the second cleaning chamber between 40-80 °C;
S22
filling the second cleaning chamber with gas at a first average volumetric flow rate for a duration T_{S23}, and maintaining a maximum pressure value in the second cleaning chamber during step S23 to be less than or equal to a second preset pressure value, wherein the gas is clean dry compressed gas;
S23
filling the second cleaning chamber with gas at a second average volumetric flow rate for a duration T_{S24}, and maintaining a maximum pressure value in the second cleaning chamber during step S24 to be less than or equal to a third preset pressure value, wherein the gas is clean dry compressed gas, wherein the first average volumetric flow rate is less than the second average volumetric flow rate, and the maximum pressure value in the second cleaning chamber during step S23 is less than the maximum pressure value in the second cleaning chamber during step S24.
S24

FIG. 17

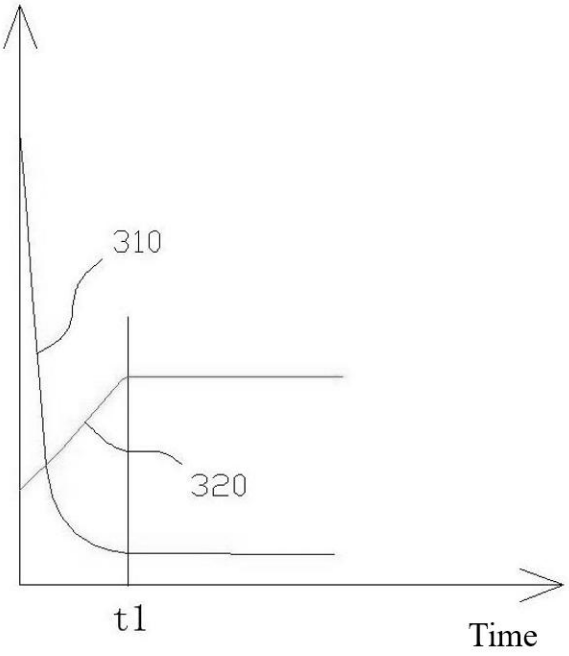
310
320
t1
Time

FIG. 18

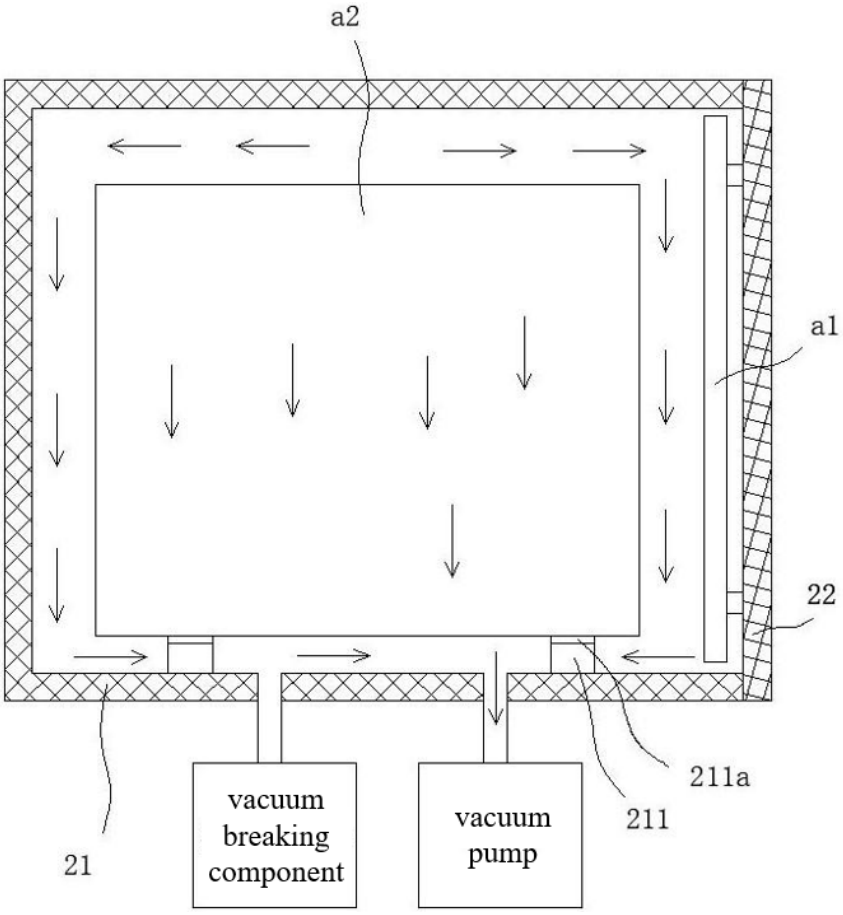
a2
a1
22
211a
211
21
vacuum breaking component
vacuum pump

FIG. 19

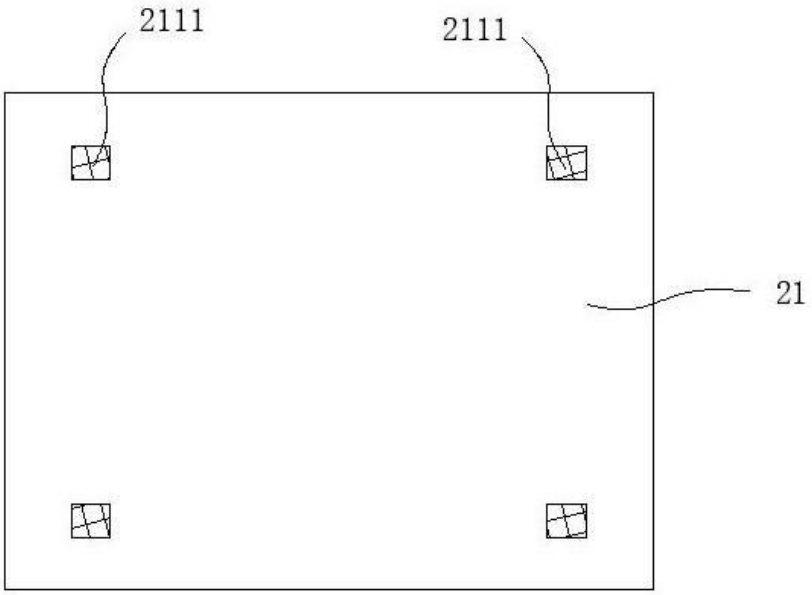
2111
2111
21

FIG. 20

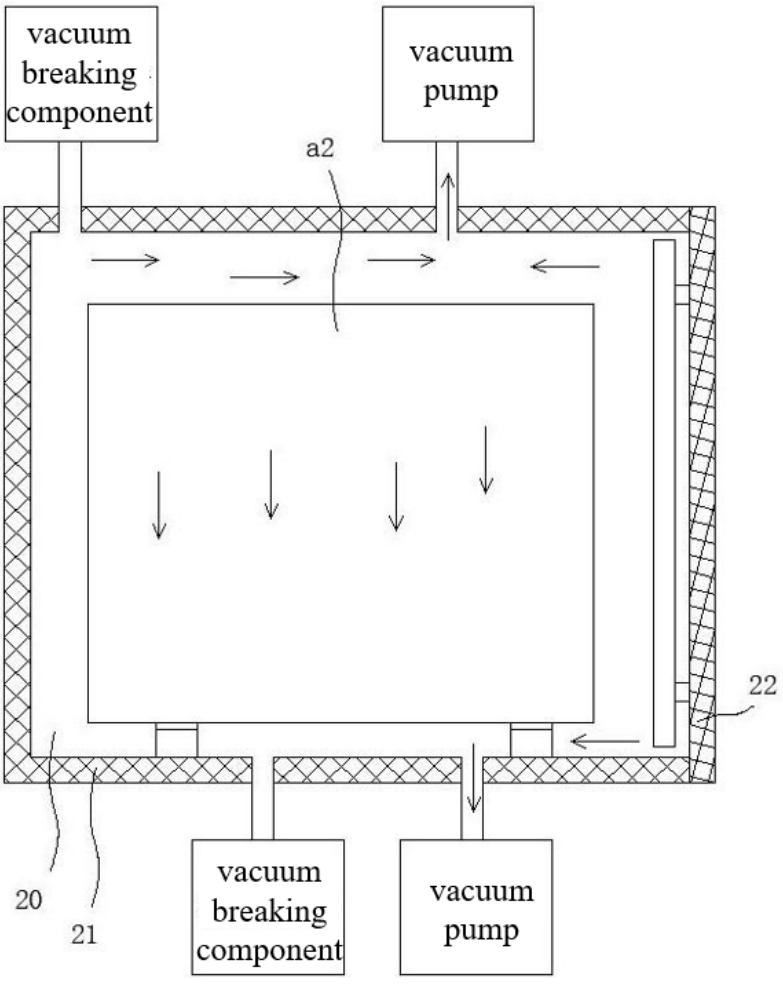
vacuum breaking component
vacuum pump
a2
22
20
21
vacuum breaking component
vacuum pump

FIG. 21

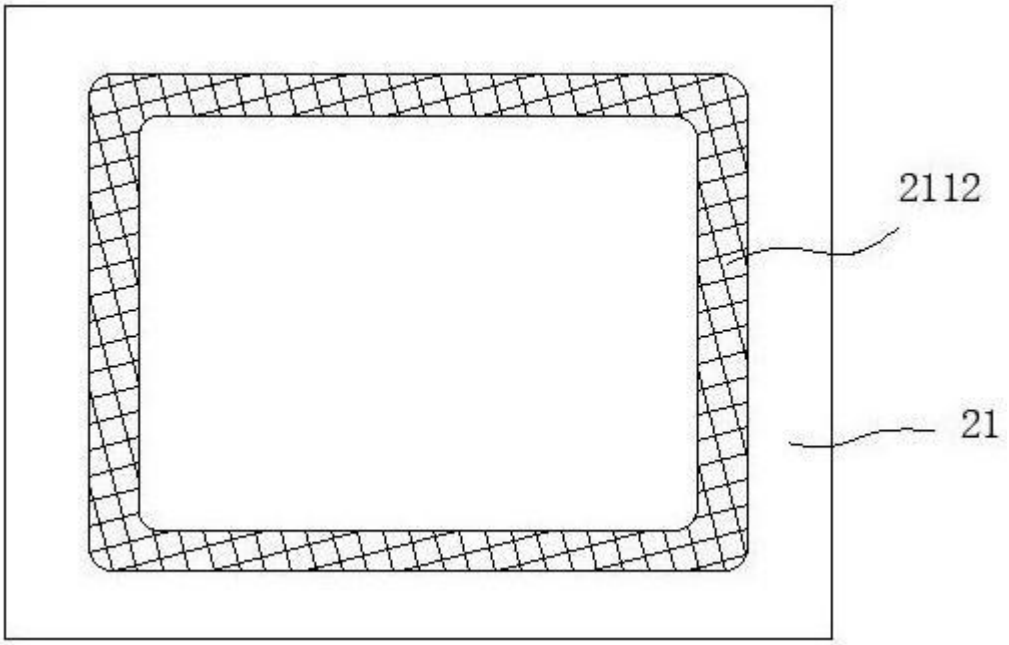
2112
21

FIG. 22

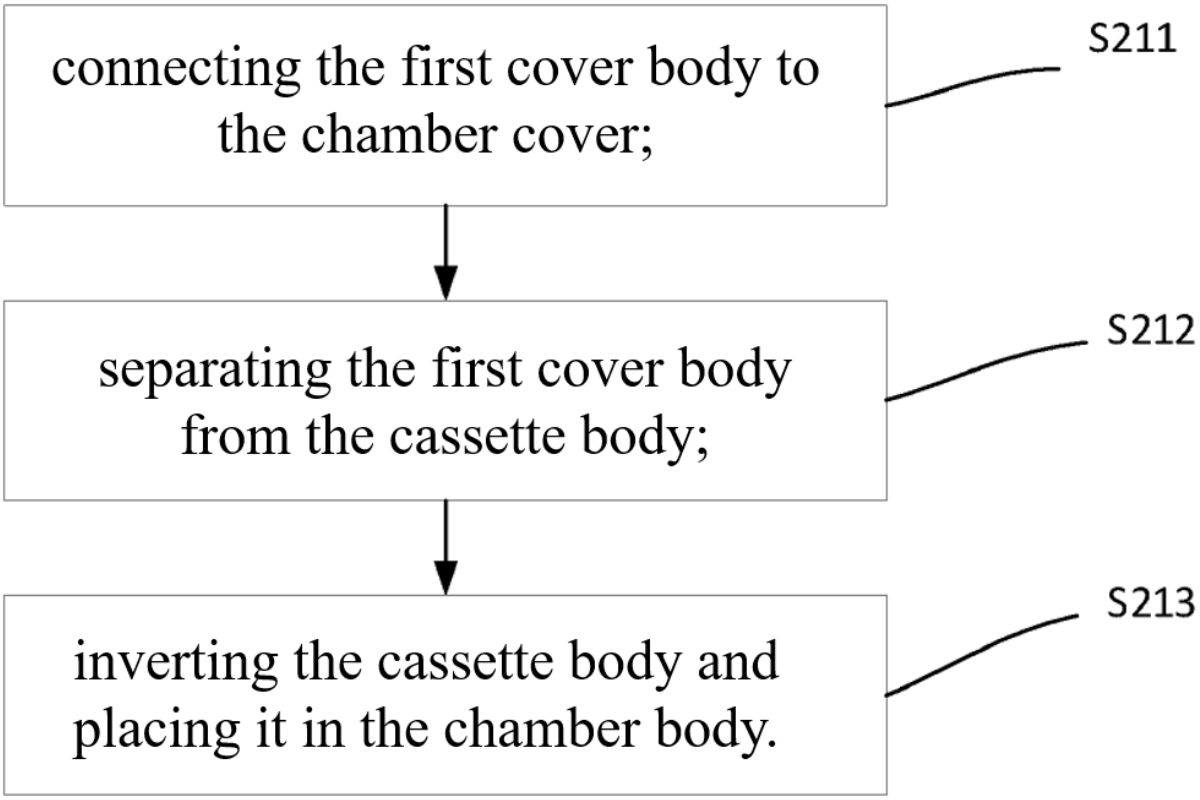
connecting the first cover body to the chamber cover;
S211
separating the first cover body from the cassette body;
S212
inverting the cassette body and placing it in the chamber body.
S213

FIG. 23

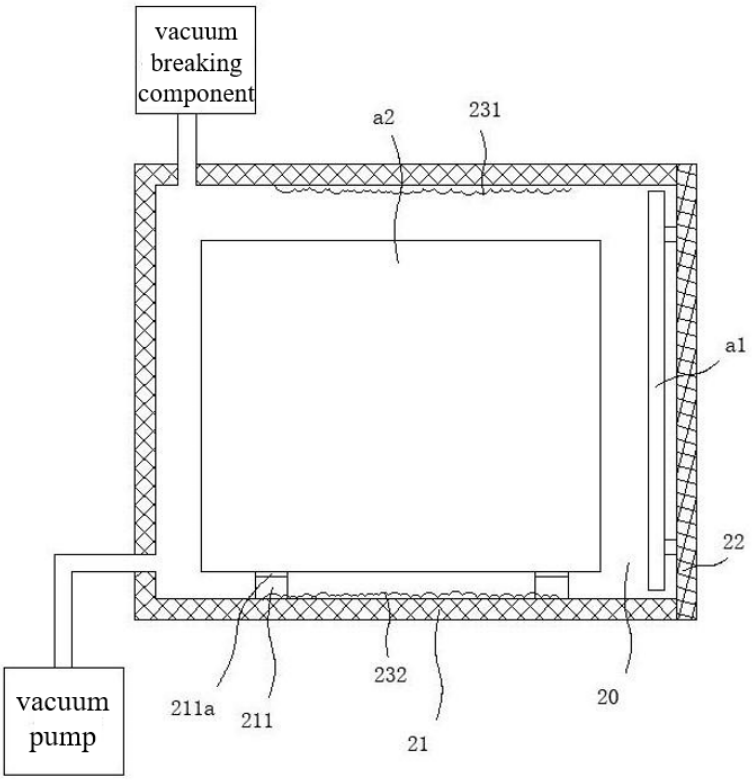
vacuum breaking component
a2
231
a1
22
vacuum pump
211a
211
232
21
20

FIG. 24

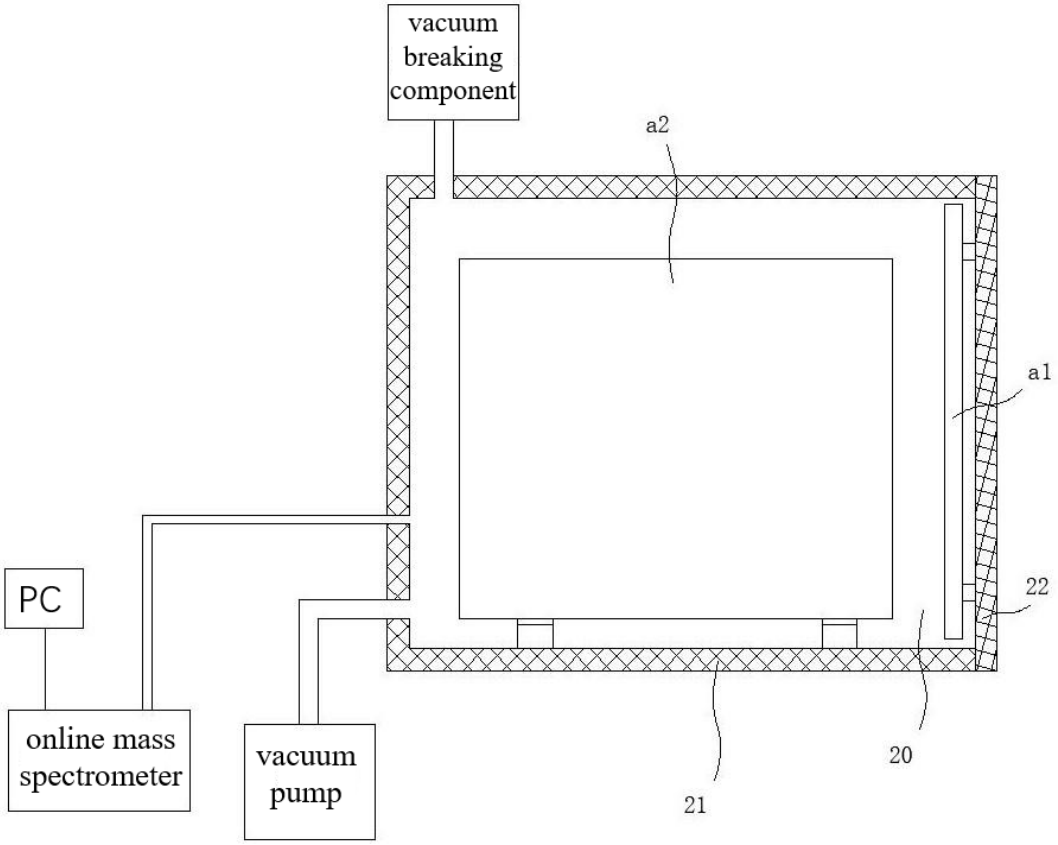
vacuum breaking component
a2
a1
22
PC
online mass spectrometer
vacuum pump
21
20

FIG. 25

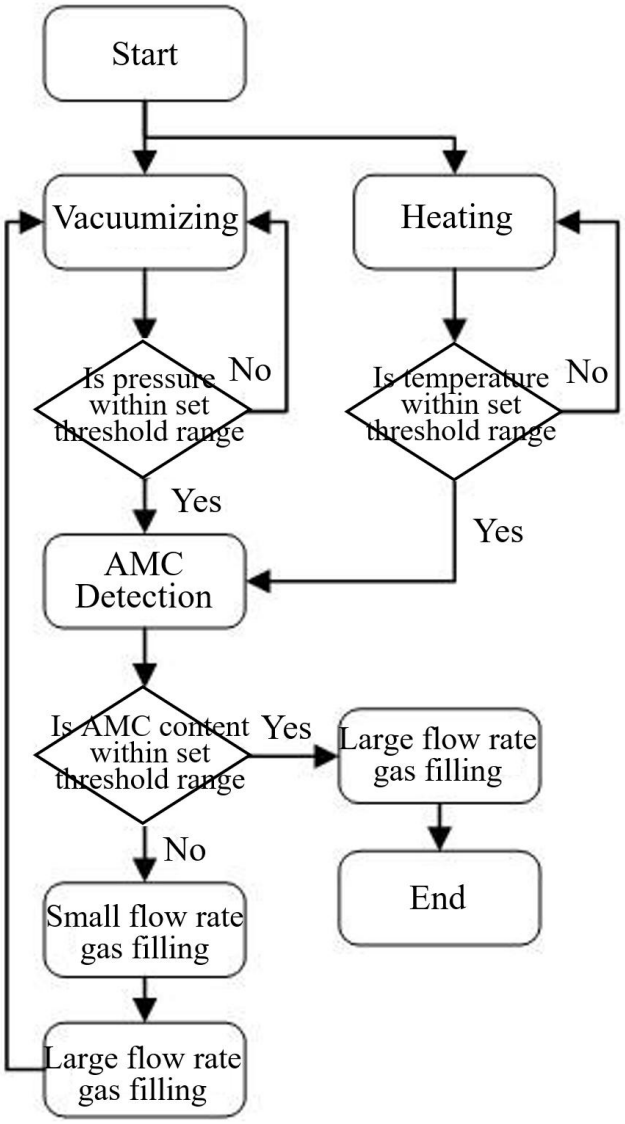
Start
Vacuumizing
Heating
Is pressure within set threshold range
No
Is temperature within set threshold range
No
Yes
Yes
AMC Detection
Is AMC content within set threshold range
Yes
Large flow rate gas filling
No
End
Small flow rate gas filling
Large flow rate gas filling

FIG. 26

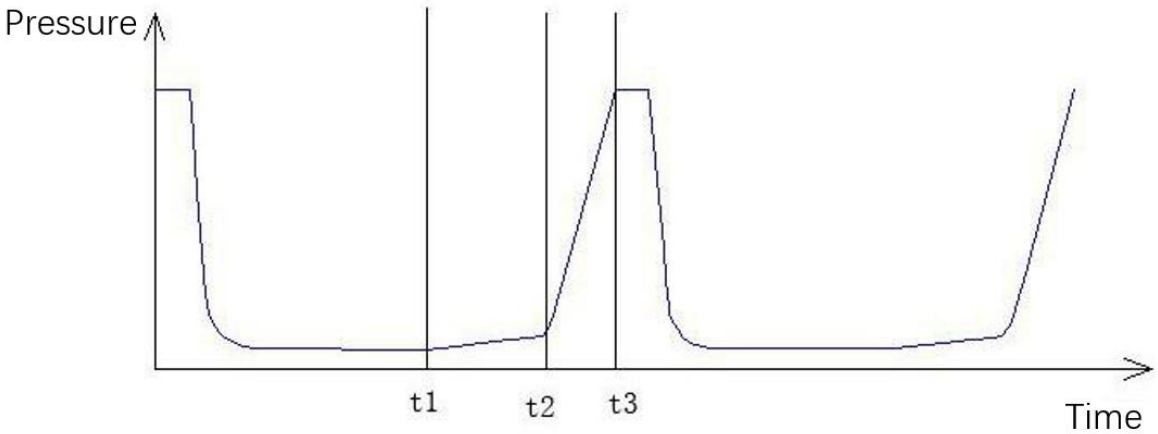
Pressure
t1
t2
t3
Time

FIG. 27

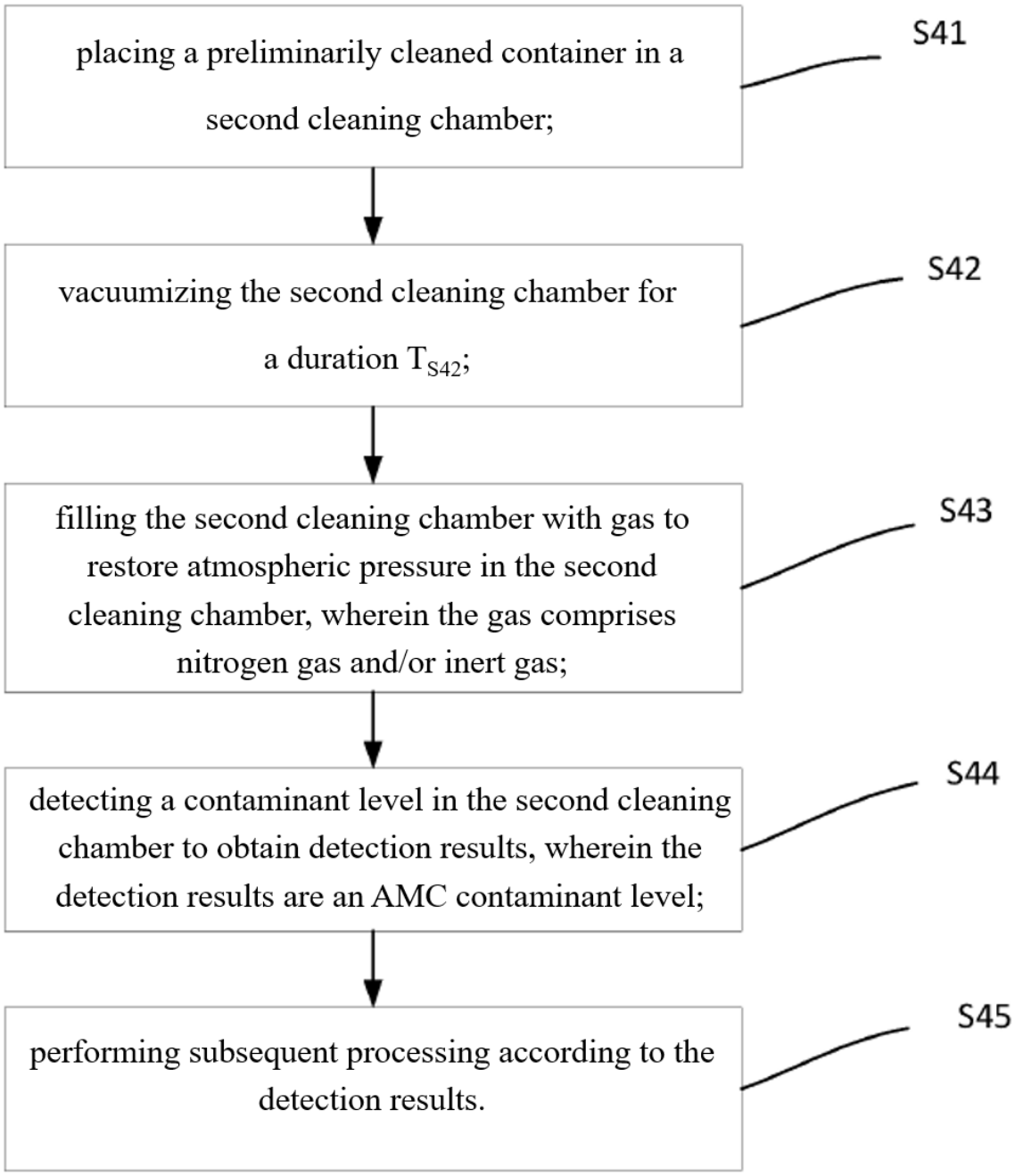
placing a preliminarily cleaned container in a second cleaning chamber;
S41
vacuumizing the second cleaning chamber for a duration T_{S42};
S42
filling the second cleaning chamber with gas to restore atmospheric pressure in the second cleaning chamber, wherein the gas comprises nitrogen gas and/or inert gas;
S43
detecting a contaminant level in the second cleaning chamber to obtain detection results, wherein the detection results are an AMC contaminant level;
S44
performing subsequent processing according to the detection results.
S45

FIG. 28