Fig. 1

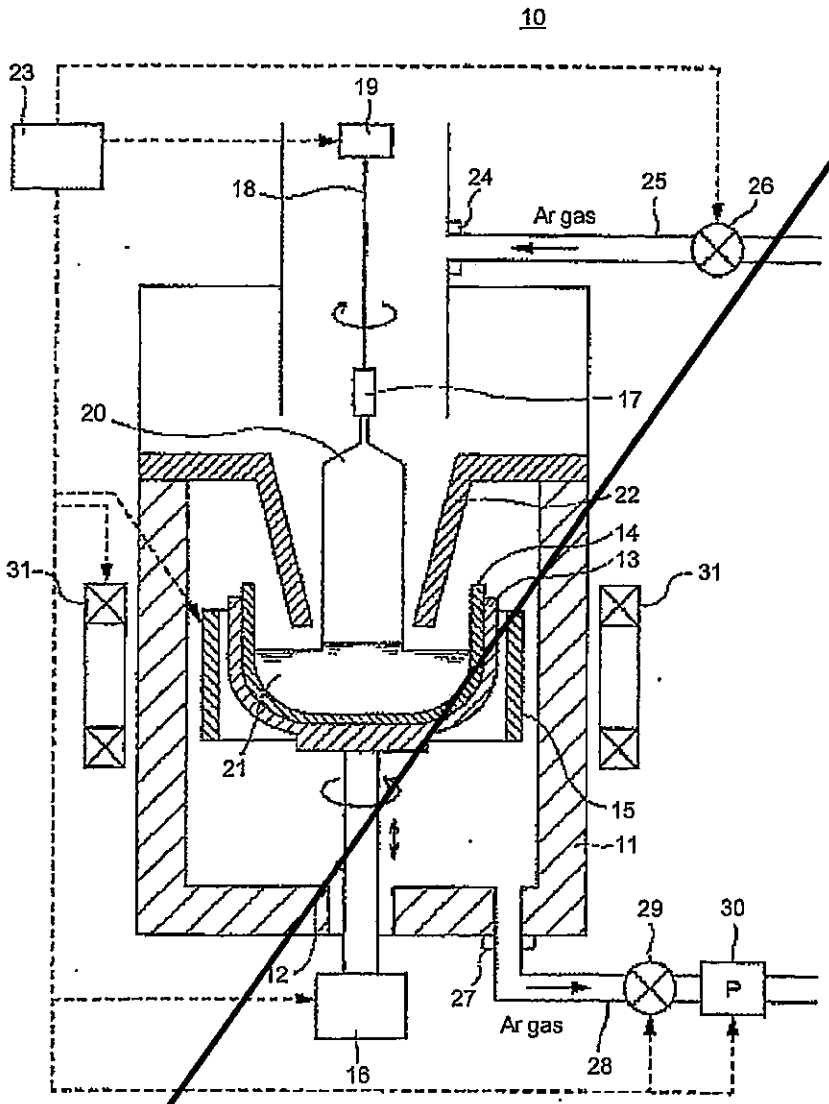
10
23
19
18
24
Ar gas
25
26
17
20
22
14
13
31
31
21
15
11
29
30
12
27
Ar gas
P
28
16

Fig. 2

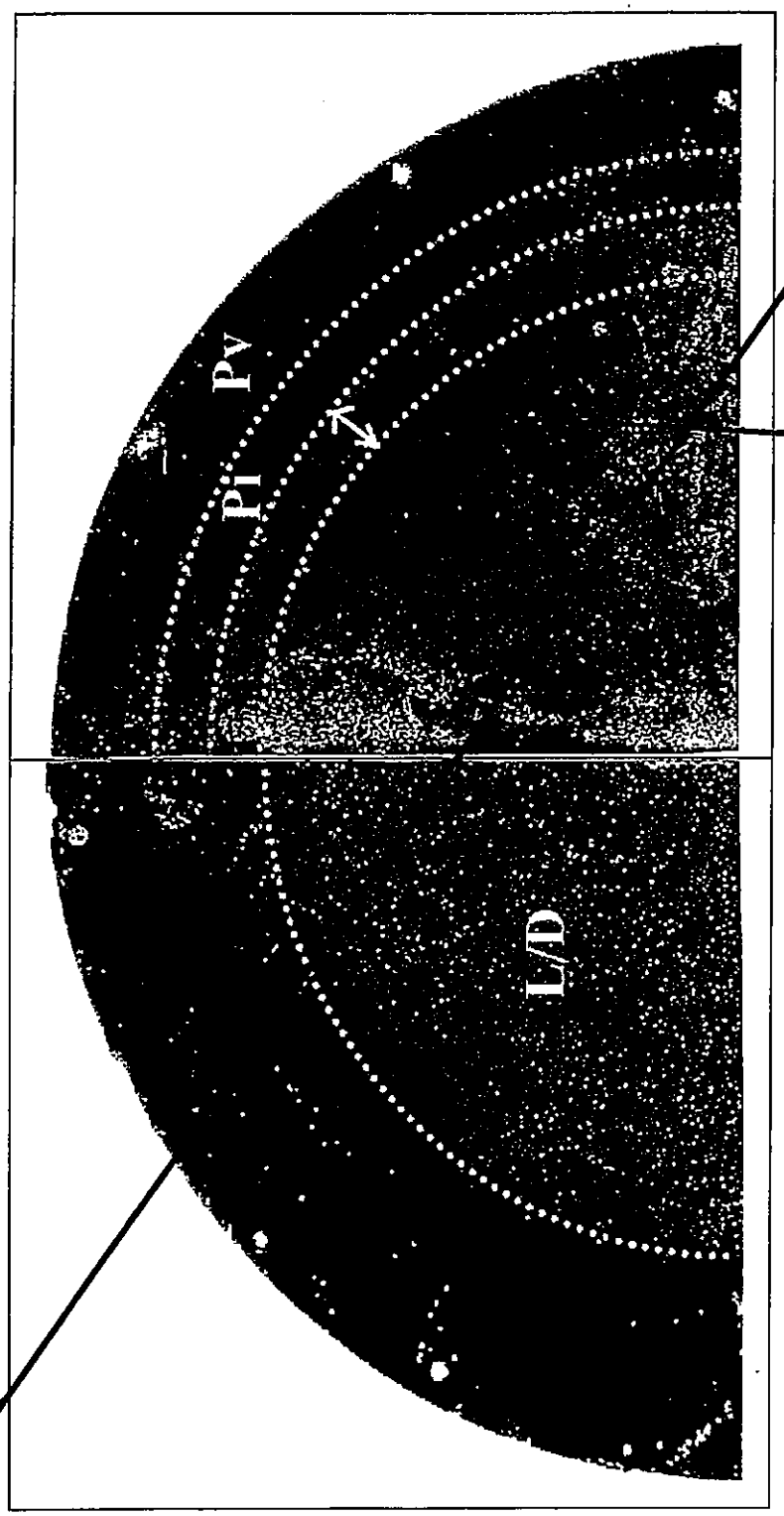

Fig. 3

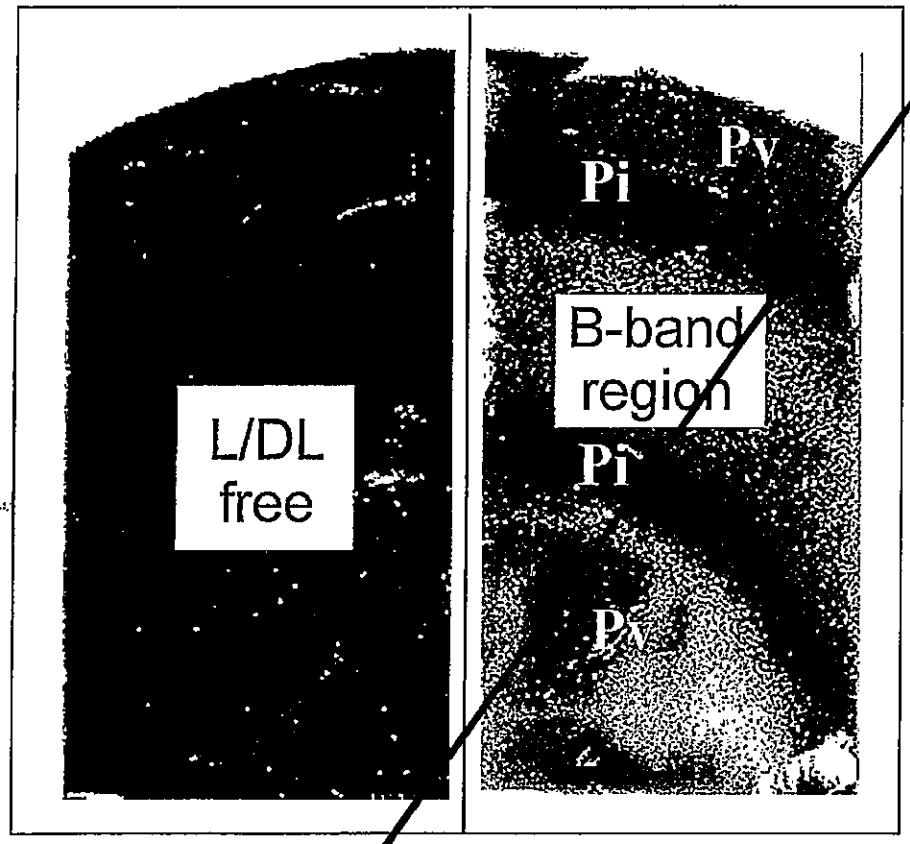

Fig. 4

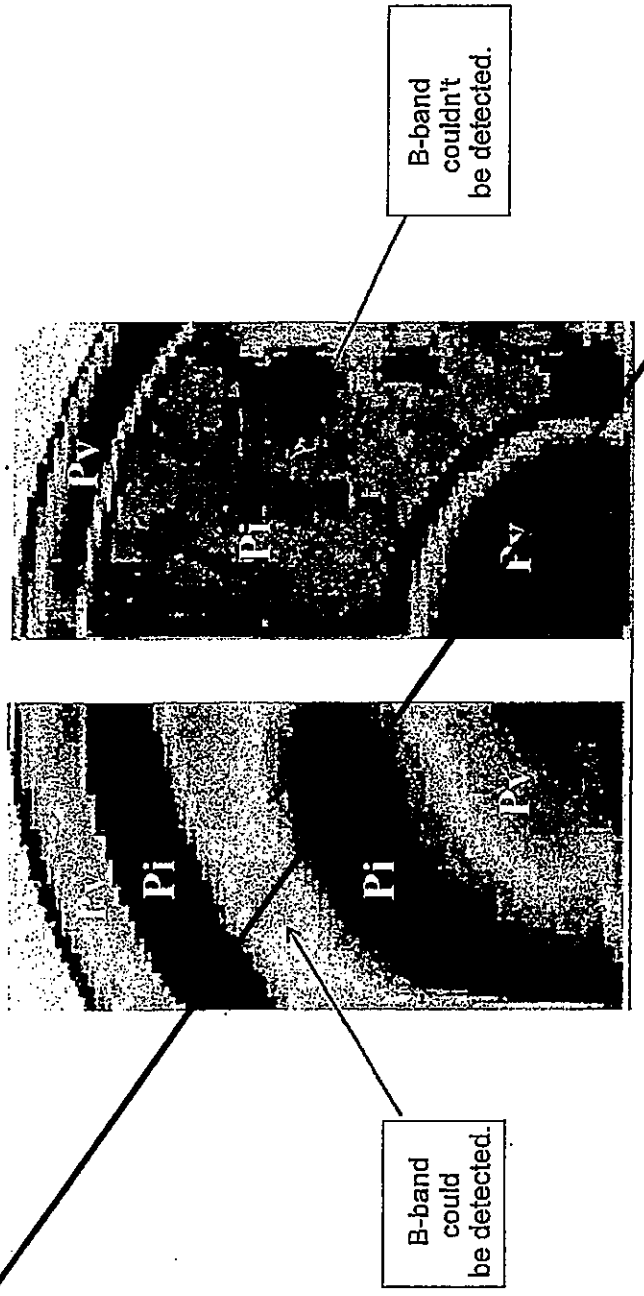
B-band couldn't be detected.
Pv
Pi
Pv
1000°C/10hrs
780°C/3hrs+1000°C/16hrs
Pi
Pi
Pv
B-band could be detected.

Fig. 5

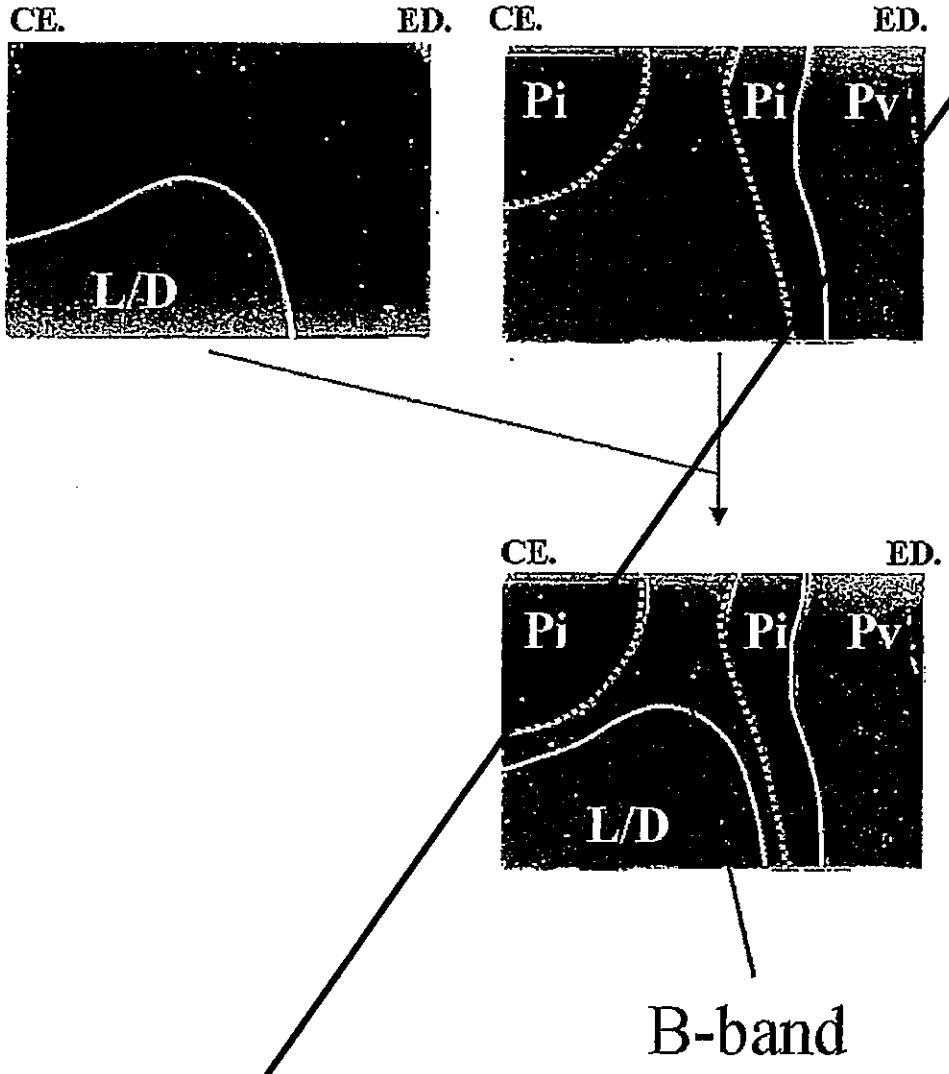

Fig. 6

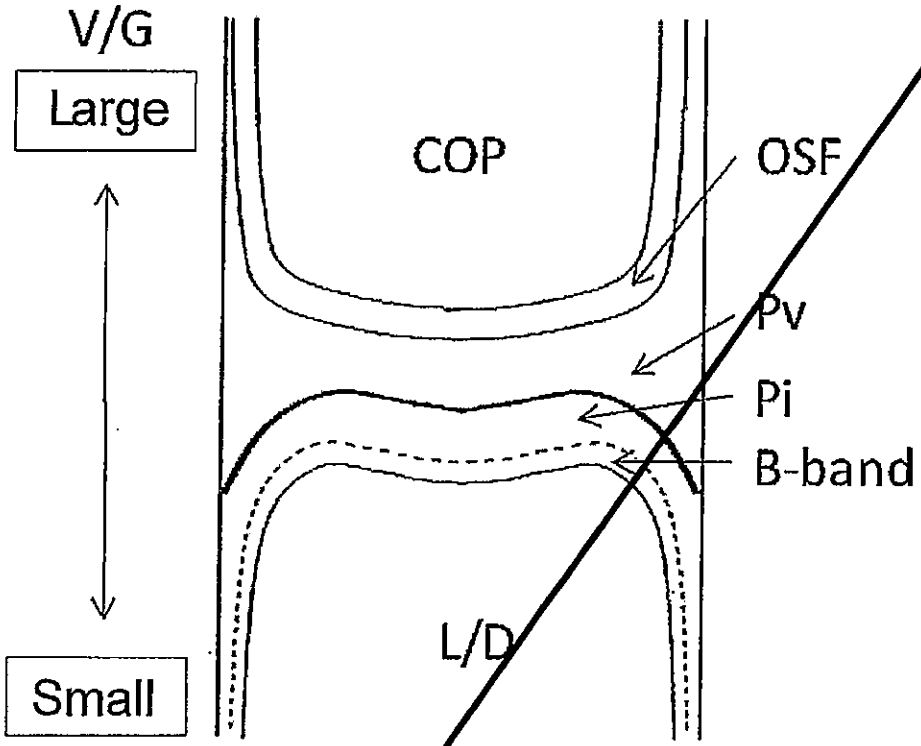

**Fig. 1**

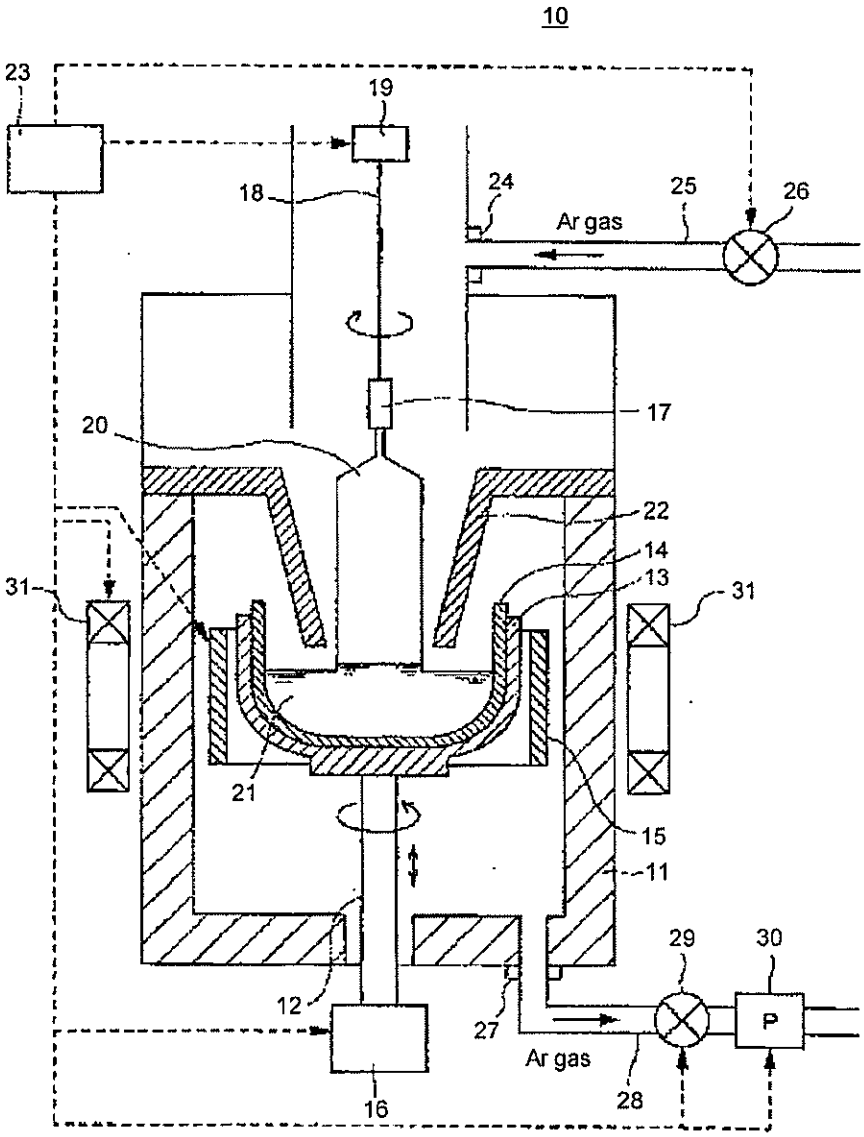
10
23
19
18
24
25
26
Ar gas
17
20
22
14
13
31
31
21
15
11
29
30
12
27
P
Ar gas
28
16

Fig. 2

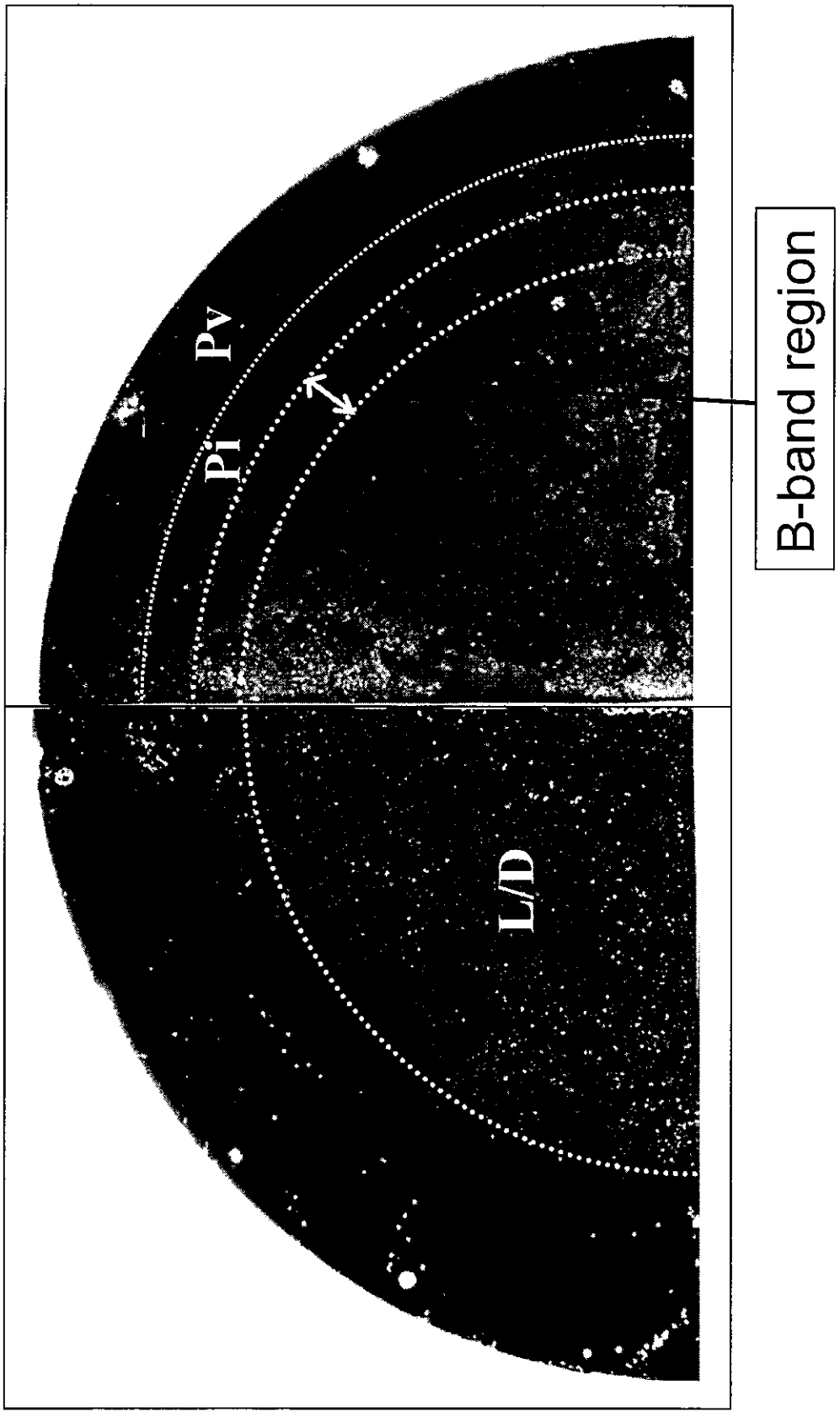

Fig. 3

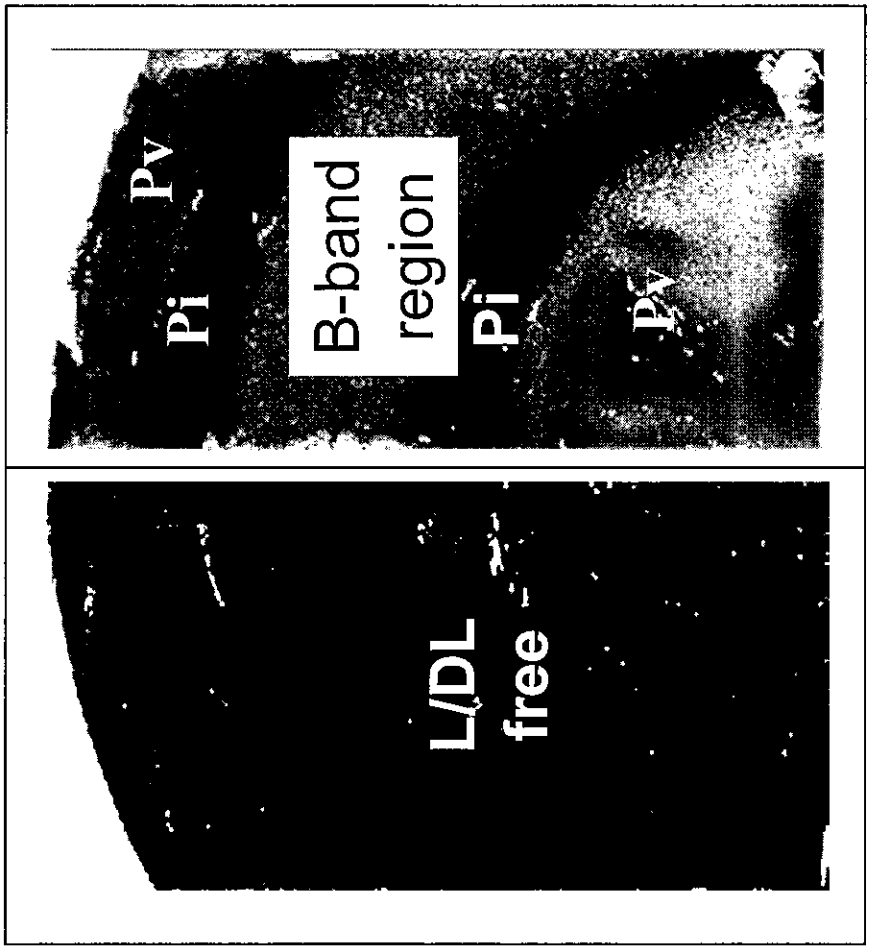

Fig. 4

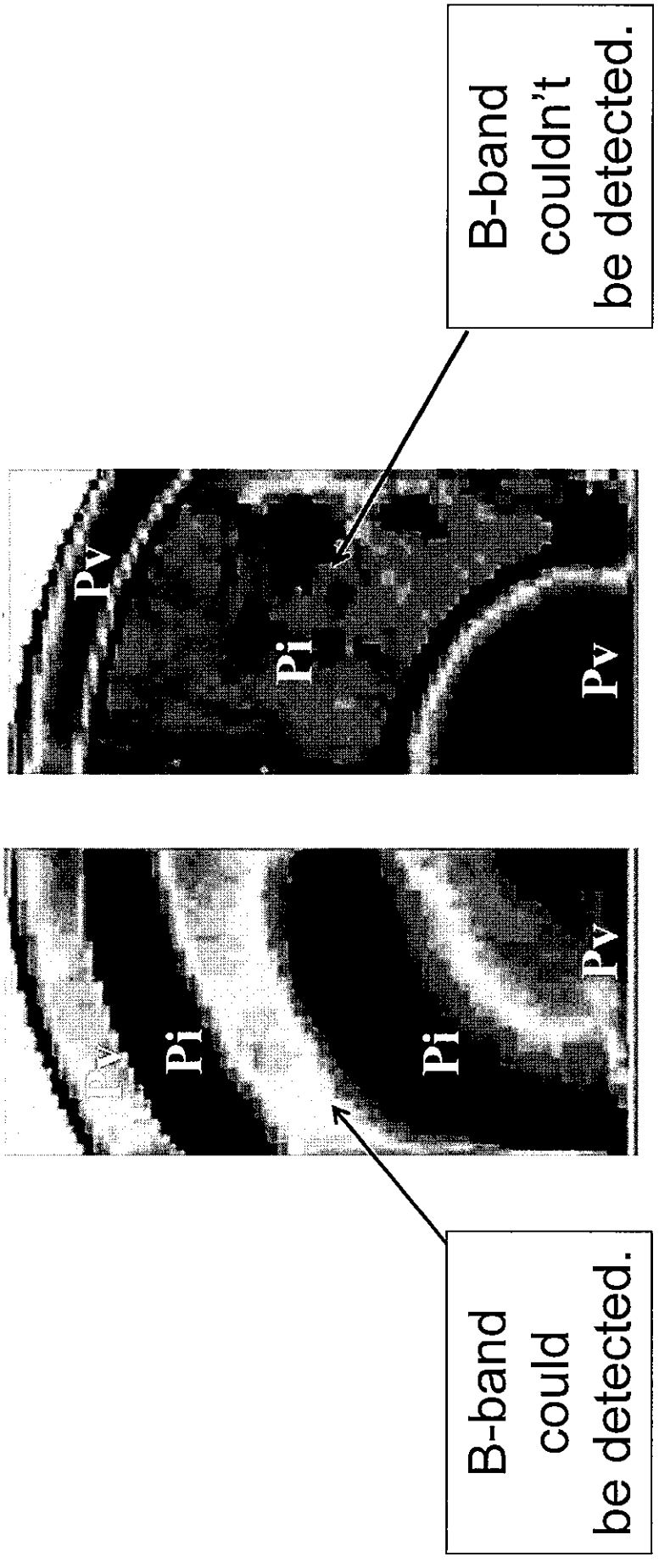
Pv
Pi
Pv
1000℃/10hrs
B-band couldn't be detected.
Pi
Pi
Pv
780℃/3hrs+1000℃/16hrs
B-band could be detected.

Fig. 5

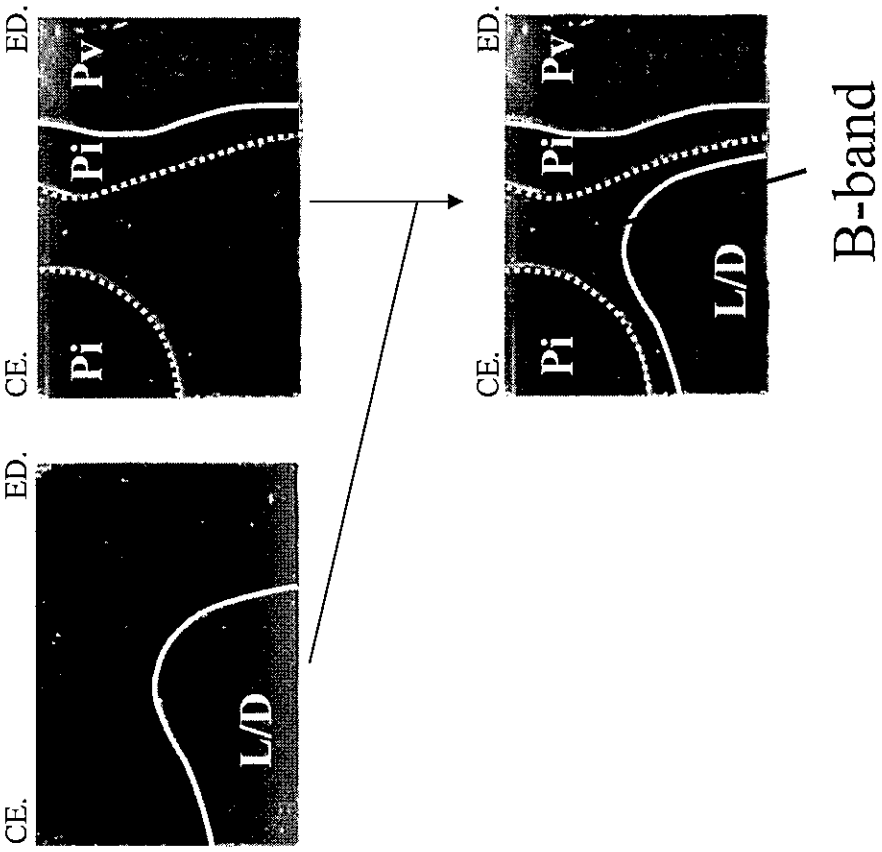

**Fig. 6**

