
TIME-DOMAIN AUDIO SIGNAL 110
ELECTRONIC DEVICE 100
ENCODED AUDIO SIGNAL 120

FIG. 1

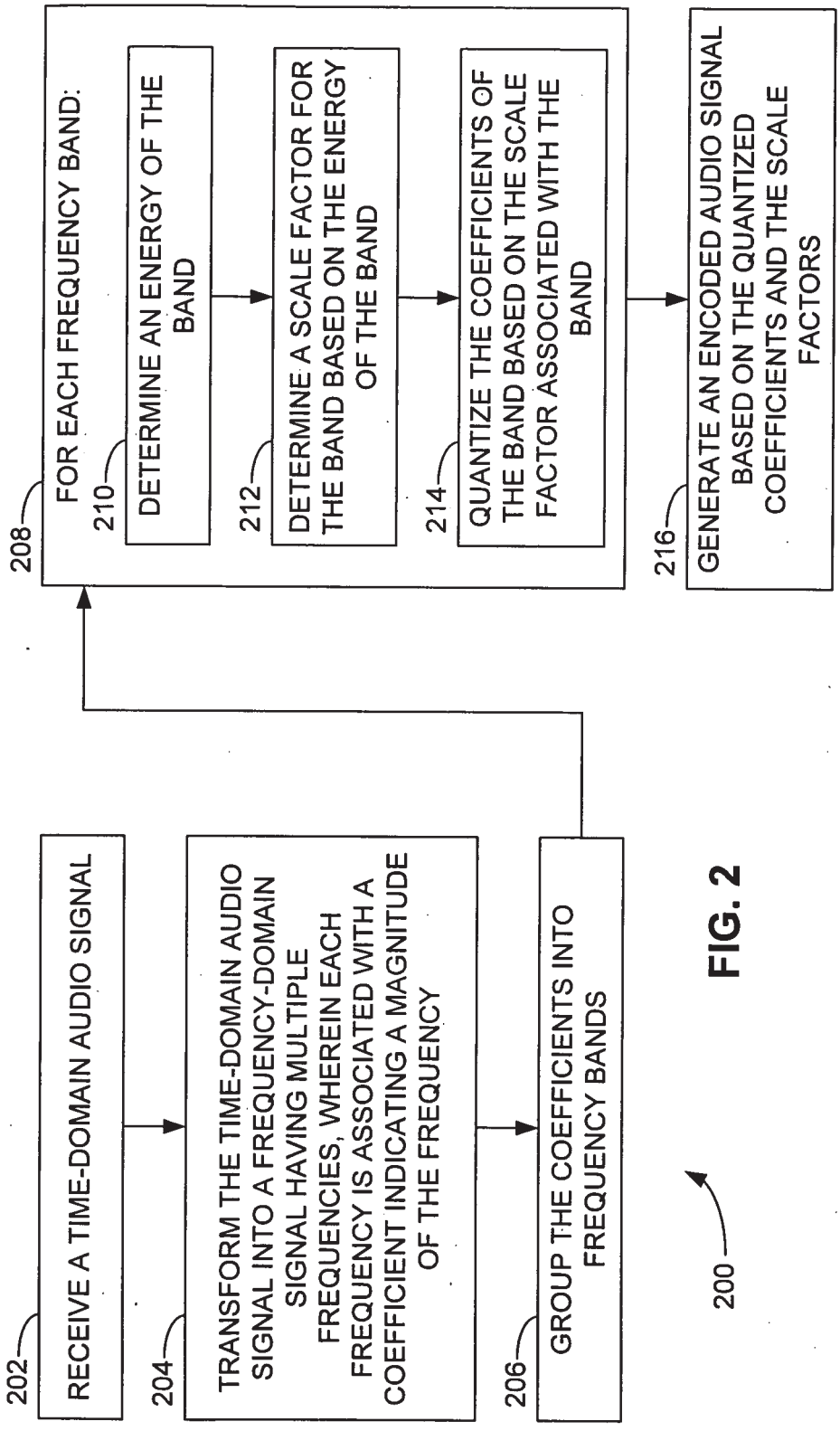
202
RECEIVE A TIME-DOMAIN AUDIO SIGNAL
204
TRANSFORM THE TIME-DOMAIN AUDIO SIGNAL INTO A FREQUENCY-DOMAIN SIGNAL HAVING MULTIPLE FREQUENCIES, WHEREIN EACH FREQUENCY IS ASSOCIATED WITH A COEFFICIENT INDICATING A MAGNITUDE OF THE FREQUENCY
206
GROUP THE COEFFICIENTS INTO FREQUENCY BANDS
208
FOR EACH FREQUENCY BAND:
210
DETERMINE AN ENERGY OF THE BAND
212
DETERMINE A SCALE FACTOR FOR THE BAND BASED ON THE ENERGY OF THE BAND
214
QUANTIZE THE COEFFICIENTS OF THE BAND BASED ON THE SCALE FACTOR ASSOCIATED WITH THE BAND
216
GENERATE AN ENCODED AUDIO SIGNAL BASED ON THE QUANTIZED COEFFICIENTS AND THE SCALE FACTORS
200

FIG. 2

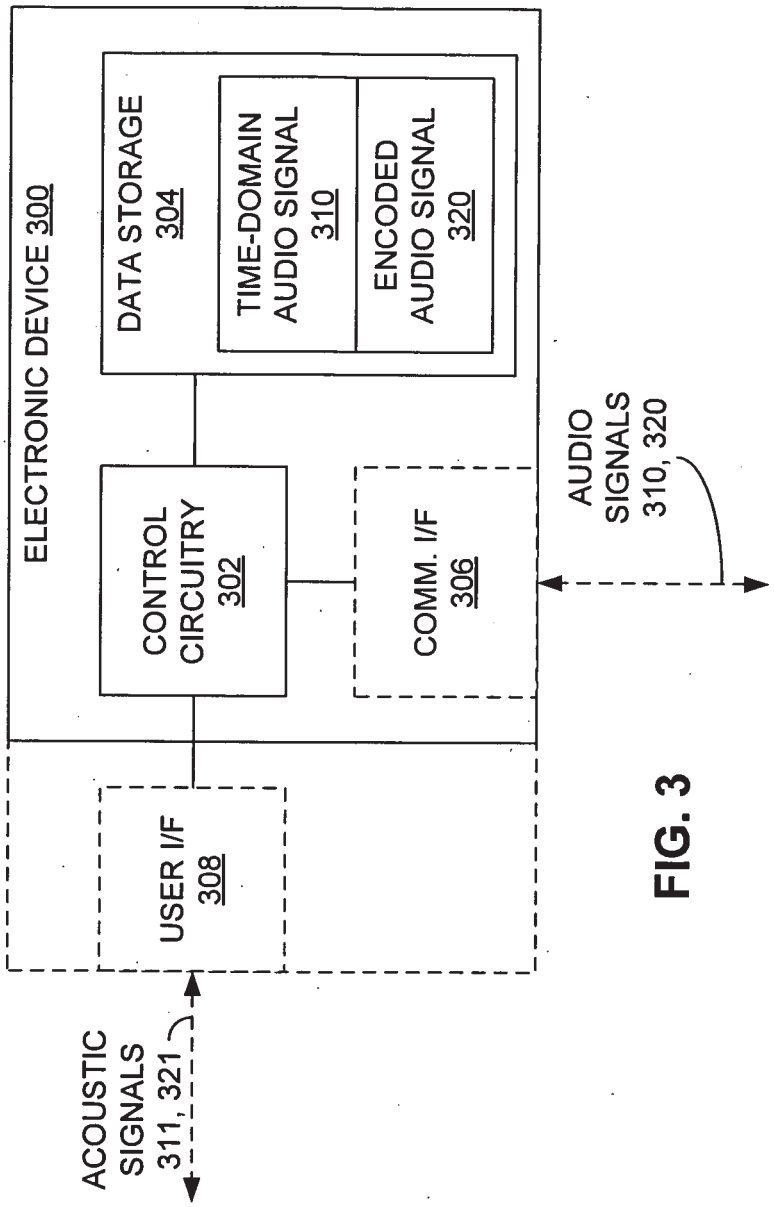
ELECTRONIC DEVICE 300
DATA STORAGE 304
TIME-DOMAIN AUDIO SIGNAL 310
ENCODED AUDIO SIGNAL 320
CONTROL CIRCUITRY 302
COMM. I/F 306
AUDIO SIGNALS 310, 320
USER I/F 308
ACOUSTIC SIGNALS 311, 321

FIG. 3

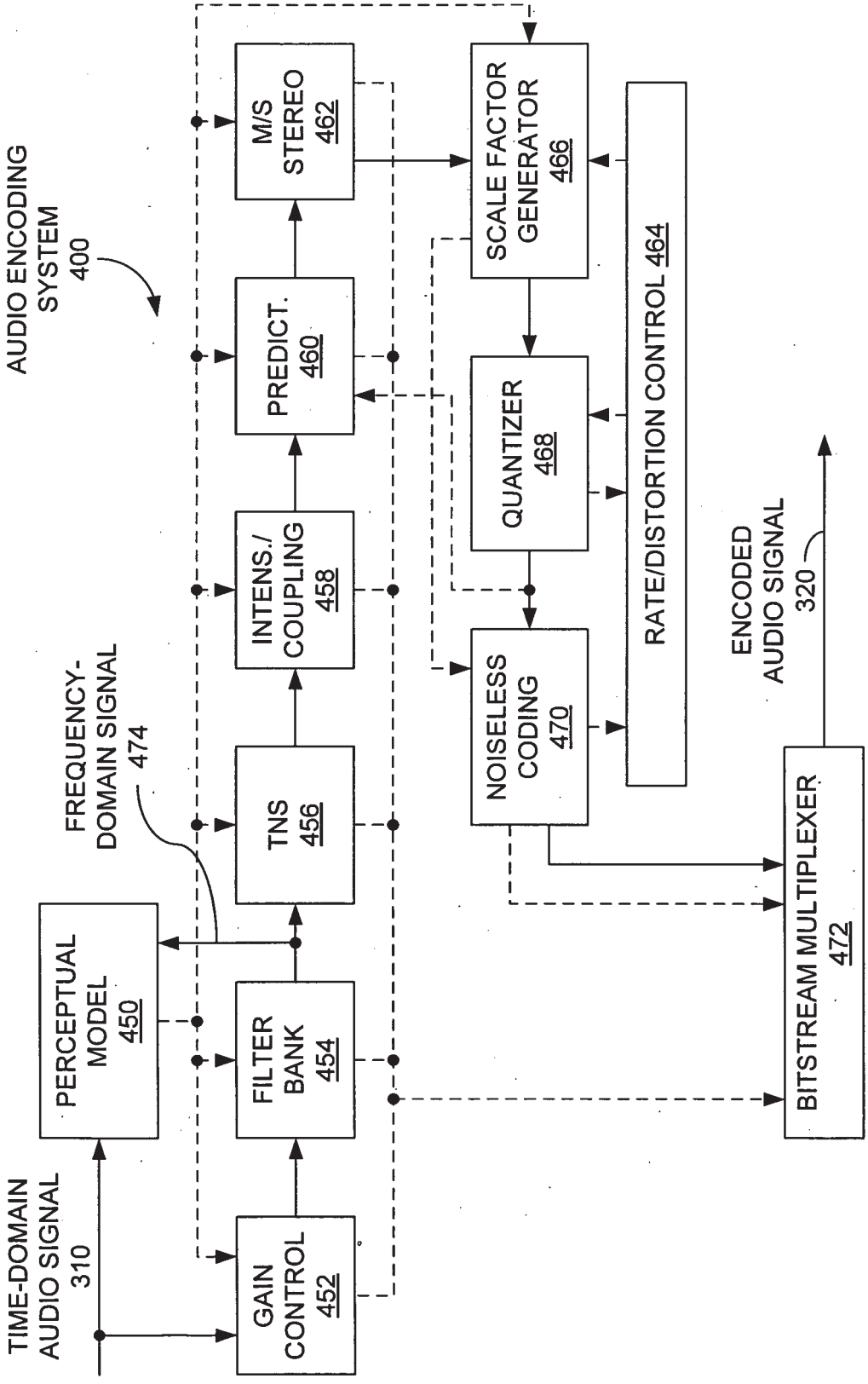
AUDIO ENCODING SYSTEM 400
TIME-DOMAIN AUDIO SIGNAL 310
GAIN CONTROL 452
PERCEPTUAL MODEL 450
FILTER BANK 454
TNS 456
INTENS./ COUPLING 458
PREDICT. 460
M/S STEREO 462
FREQUENCY-DOMAIN SIGNAL 474
SCALE FACTOR GENERATOR 466
QUANTIZER 468
NOISELESS CODING 470
RATE/DISTORTION CONTROL 464
BITSTREAM MULTIPLEXER 472
ENCODED AUDIO SIGNAL 320

FIG. 4

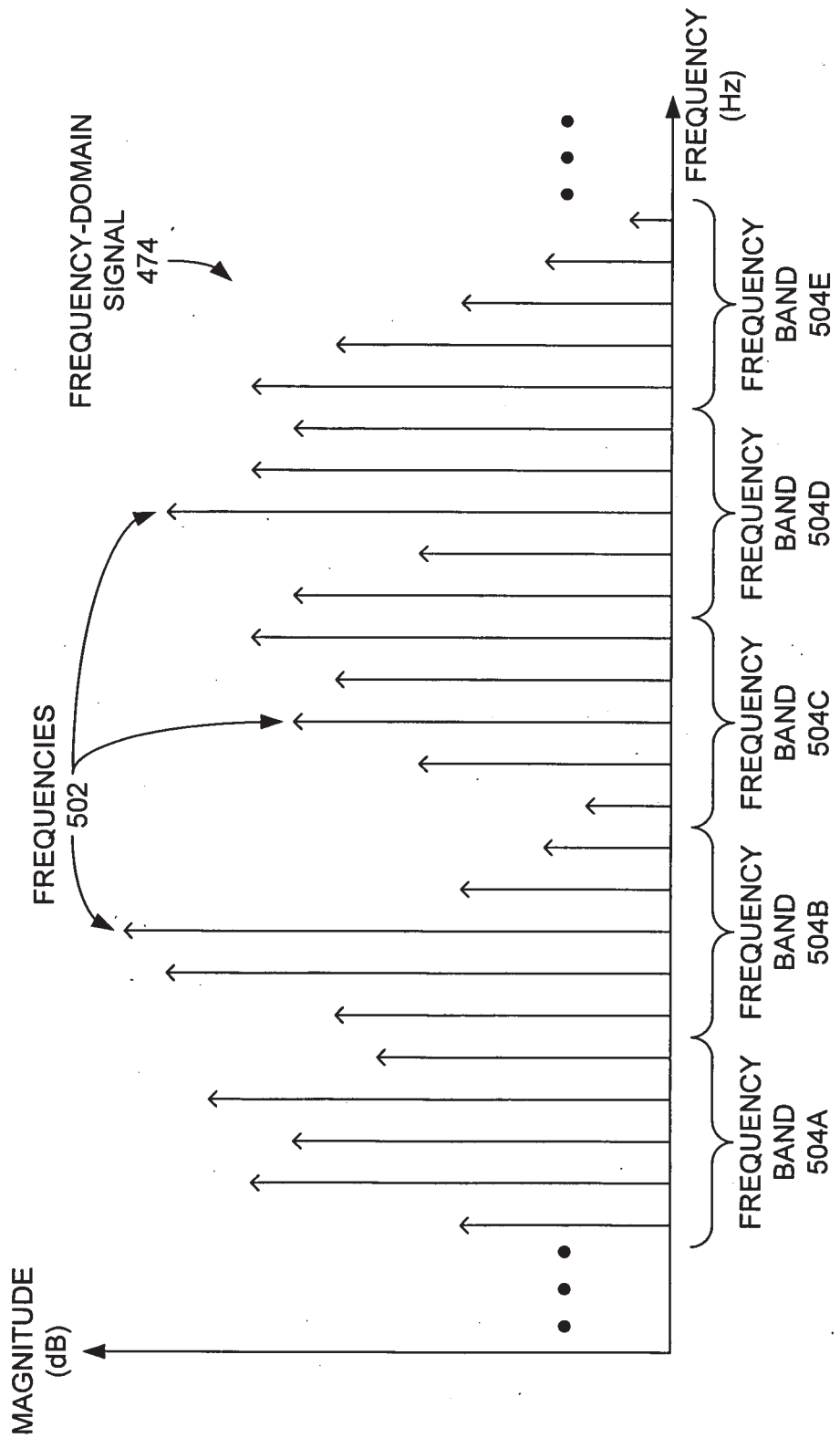
MAGNITUDE (dB)
FREQUENCY (Hz)
FREQUENCY-DOMAIN SIGNAL 474
FREQUENCIES 502
FREQUENCY BAND 504A
FREQUENCY BAND 504B
FREQUENCY BAND 504C
FREQUENCY BAND 504D
FREQUENCY BAND 504E

FIG. 5