9705137-9

PCT WORLD INTELLECTUAL PROPERTY ORGANIZATION
International Bureau

INTERNATIONAL APPLICATION PUBLISHED UNDER THE PATENT COOPERATION TREATY (PCT)

(51) International Patent Classification 6 : A24F 47/00 | A2

(11) International Publication Number: **WO 96/32854**

(43) International Publication Date: 24 October 1996 (24.10.96)

(21) International Application Number: PCT/US96/05417

(22) International Filing Date: 19 April 1996 (19.04.96)

(30) Priority Data:

08/425,166	20 April 1995 (20.04.95)	US
08/425,837	20 April 1995 (20.04.95)	US
08/426,165	20 April 1995 (20.04.95)	US

(71) Applicant *(for all designated States except US)*: PHILIP MORRIS PRODUCTS INC. [US/US]; 3601 Commerce Road, Richmond, VA 23234 (US).

(72) Inventors; and

(75) Inventors/Applicants *(for US only)*: BAGGETT, James, D., Jr. [US/US]; 1825 Parkway Lane, Richmond, VA 23225 (US). CLARK, David, A. [US/US]; 2910 Newquay Lane, Richmond, VA 23236 (US). COUNTS, Mary, Ellen [US/US]; 4506 Cutshaw Avenue, Richmond, VA 23230 (US). COWLING, Patrick, C. [US/US]; 4607 Black Oak Road, Richmond, VA 23237 (US). HOUCK, Willie, G., Jr. [US/US]; 7753 Lake Forest Drive, Richmond, VA 23235 (US). MOORE, Michael, A. [US/US]; 2241 Banstead Road, Midlothian, VA 23113 (US). SANDERSON, Wesley, G. [US/US]; 10412 Redbridge Road, Richmond, VA 23226 (US). UHL, Richard, G. [US/US]; 13912 Beechwood Point Rd., Midlothian, VA 23112 (US). WATKINS, Michael, L. [US/US]; 3318 Grove Avenue, Chester, VA 23831 (US). WRENN, Susan, E. [US/US]; 12130 Ivy Mill Road, Chesterfield, VA 23832 (US). FLEISCHHAUER, Grier, S. [US/US]; 1004 Lady Jean Court, Midlothian, VA 23113 (US). HAYES, Patrick, H. [US/US]; 4540 Forrestal Road, Chester, VA 23831 (US). MORGAN, Constance, H. [US/US]; 9608 Summercliff Court, Chesterfield, VA 23832 (US). HAJALIGOL, Mohammad, R. [US/US]; Apartment H, 3322 Old Courthouse Road, Richmond, VA 23236 (US). NICHOLS, Walter, A. [US/US]; 10316 Edgebrook Court, Richmond, VA 23235 (US). SHARPE, David, E. [US/US]; 6500 Glebe Point Road, Chesterfield, VA 23835 (US).

(74) Agents: MAGNONE, Joseph, R. et al.; Burns, Doane, Swecker & Mathis, P.O. Box 1404, Alexandria, VA 22313-1404 (US).

(81) Designated States: AL, AM, AT, AU, AZ, BB, BG, BR, BY, CA, CH, CN, CZ, DE, DK, EE, ES, FI, GB, GE, HU, IS, JP, KE, KG, KP, KR, KZ, LK, LR, LS, LT, LU, LV, MD, MG, MK, MN, MW, MX, NO, NZ, PL, PT, RO, RU, SD, SE, SG, SI, SK, TJ, TM, TR, TT, UA, UG, US, UZ, VN, ARIPO patent (KE, LS, MW, SD, SZ, UG), Eurasian patent (AM, AZ, BY, KG, KZ, MD, RU, TJ, TM), European patent (AT, BE, CH, DE, DK, ES, FI, FR, GB, GR, IE, IT, LU, MC, NL, PT, SE), OAPI patent (BF, BJ, CF, CG, CI, CM, GA, GN, ML, MR, NE, SN, TD, TG).

Published
Without international search report and to be republished upon receipt of that report.

(54) Title: CIGARETTE AND HEATER FOR USE IN AN ELECTRICAL SMOKING SYSTEM

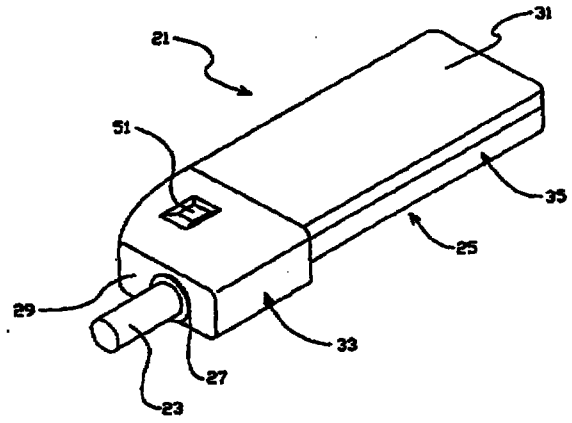

(57) Abstract

A cigarette (23) comprises a tobacco rod having filled and unfilled portions arranged so that electrical heater elements (31) may overlap both portions. The rod includes a tubular tobacco web. The web is constructed by converting tobacco feedstock into a continuous sheet of tobacco web and converting the continuous sheet of tobacco web into one or ore bobbins of tobacco web suitable for automated manufacture of cigarettes. A heater (25) comprises a supporting hub and electrically resistive heater blades (37) defining a receptacle (27) for an inserted cigarette (23). Each blade comprises first and second heater blade legs each having a first end and a second end, and a connecting section connecting the second end of the first leg and the first end of the second leg. The blades (37) are heated by a resistive heating circuit and heat the inserted cigarette (23). The legs are separated by a gap to permit entrainment of flavour substances upon drawing.