FIG. 1

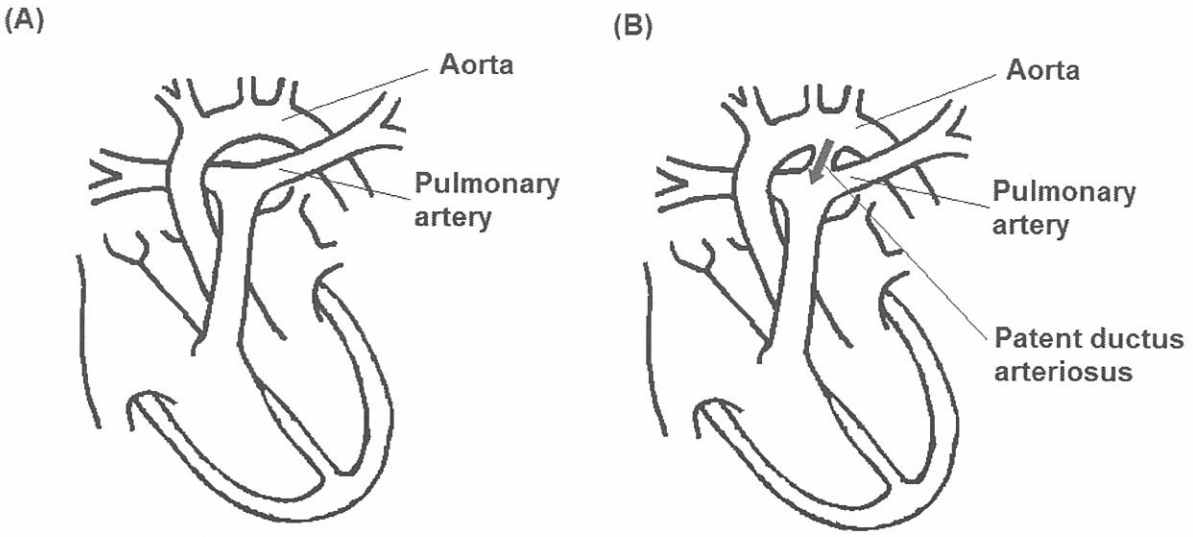
(A)
Aorta
Pulmonary artery
(B)
Aorta
Pulmonary artery
Patent ductus arteriosus

FIG. 2

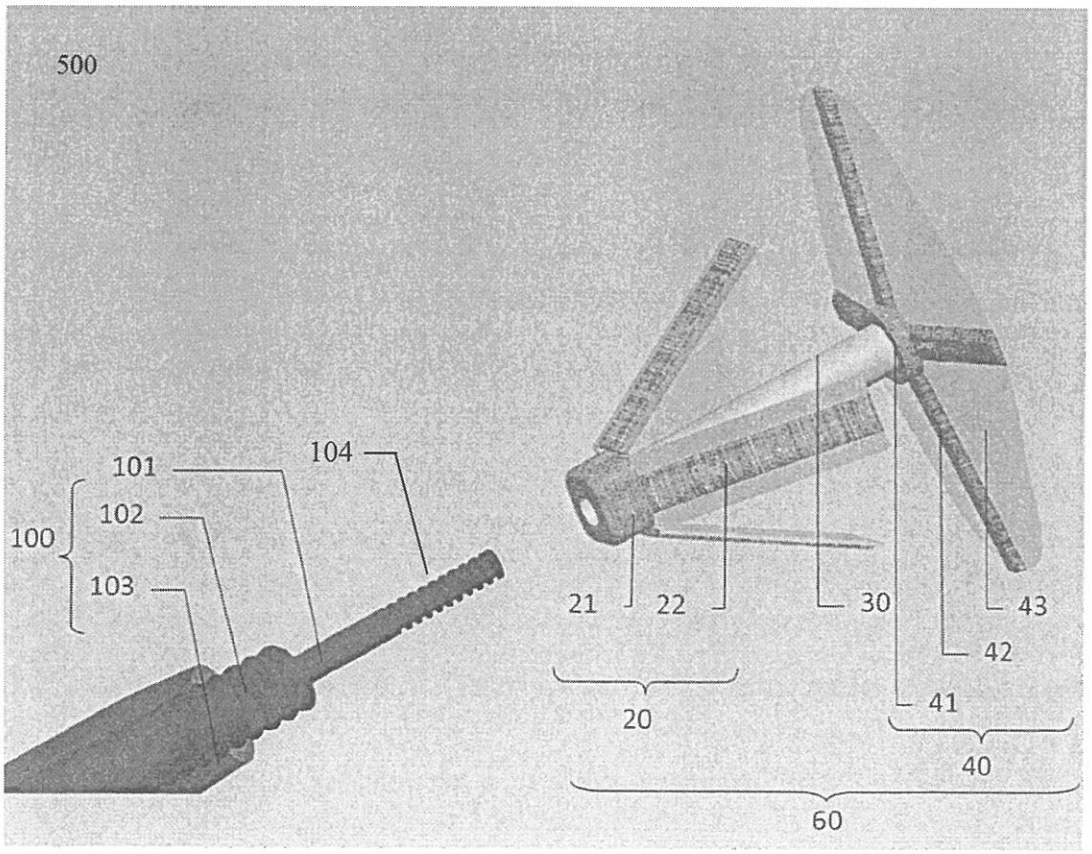
500
101
102
103
104
100
21
22
30
43
42
41
20
40
60

FIG. 3

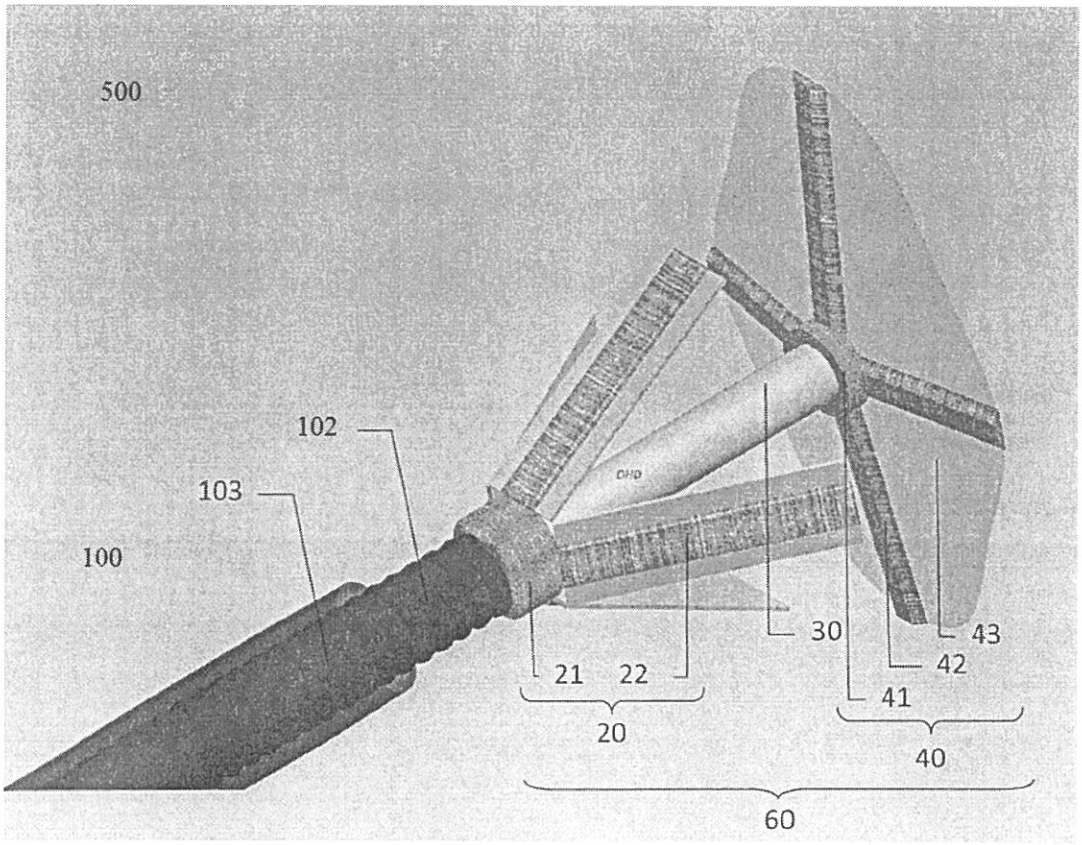

FIG. 4

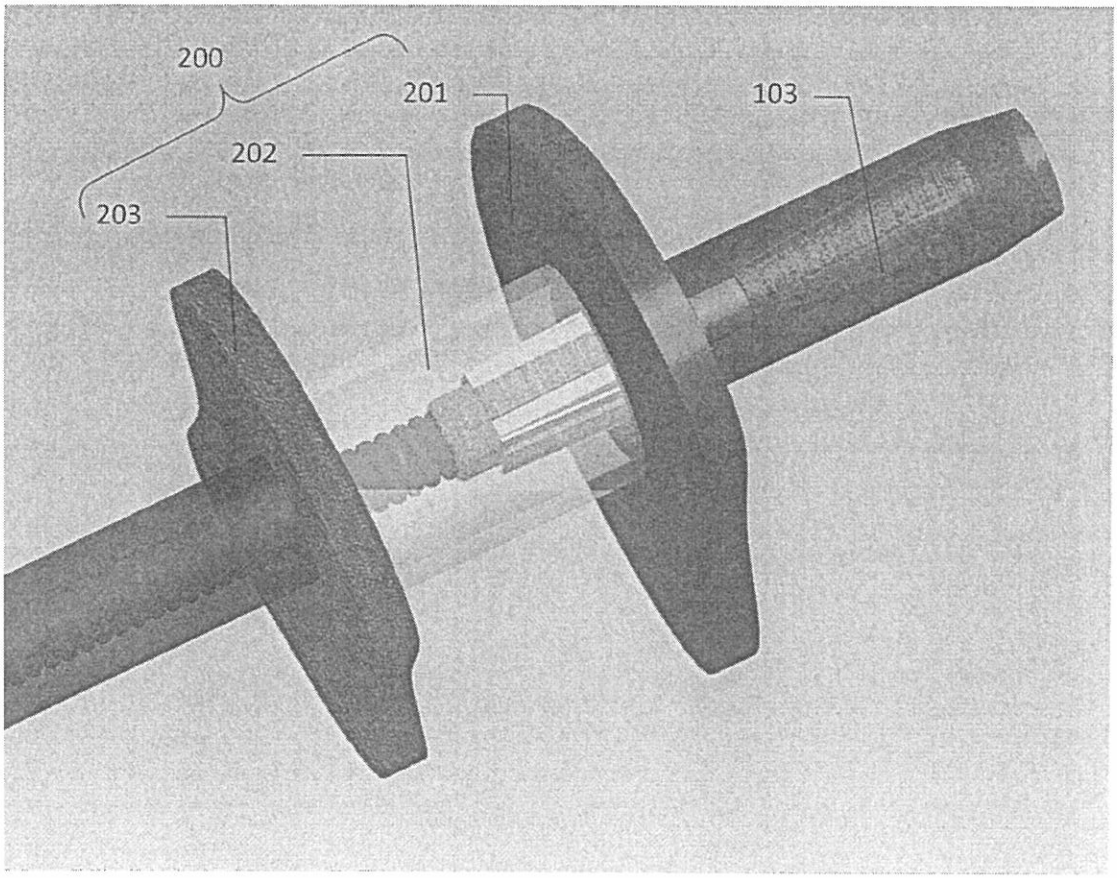

FIG. 5

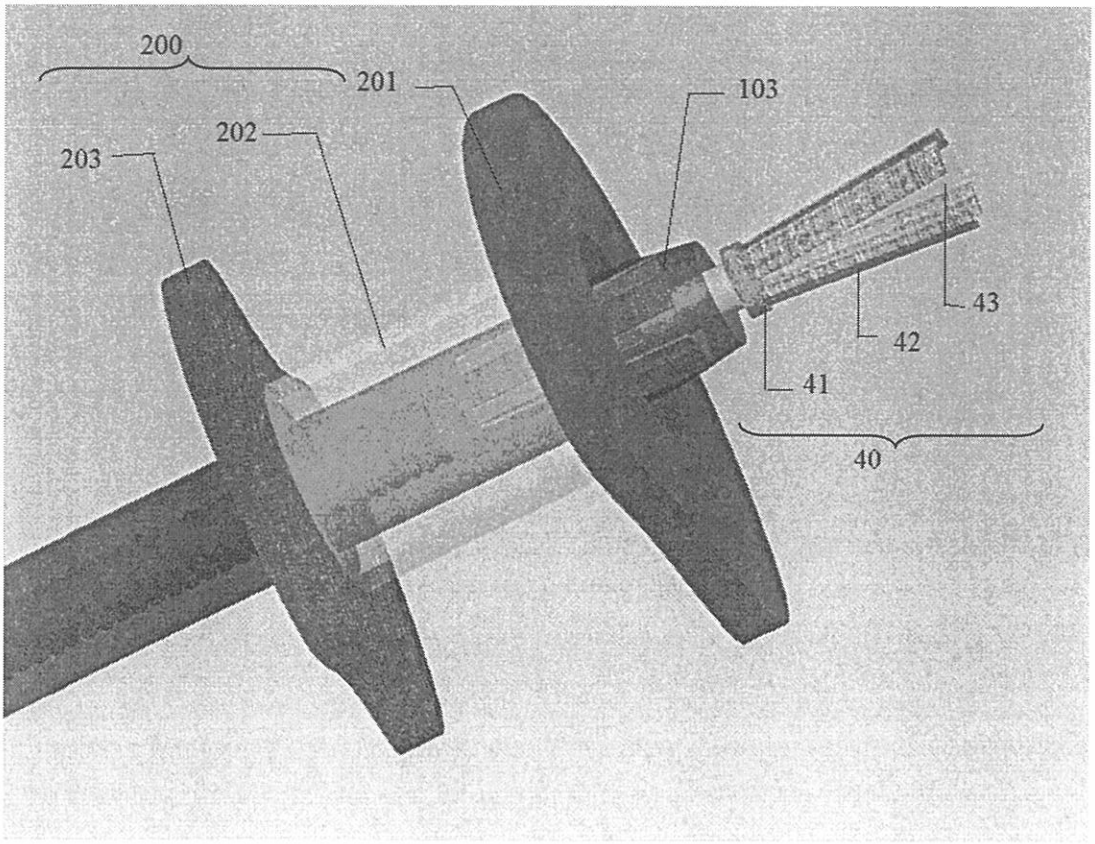

FIG. 6

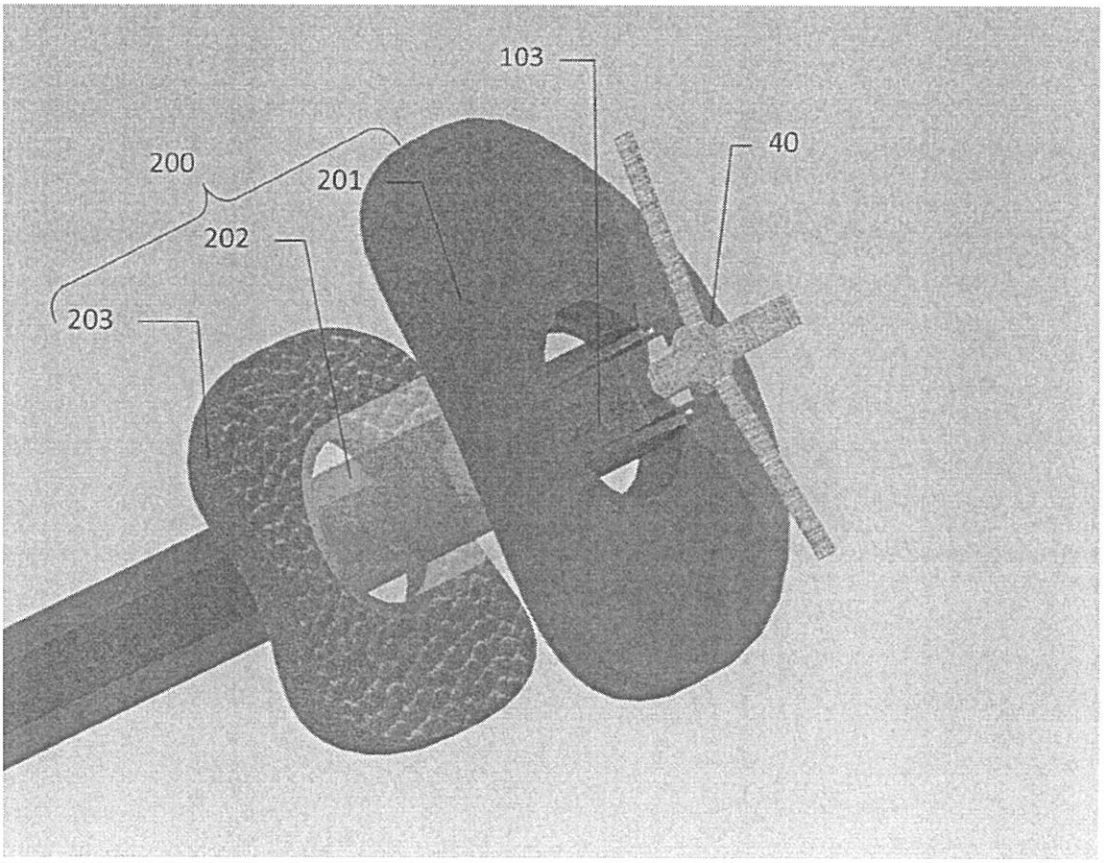

FIG. 7

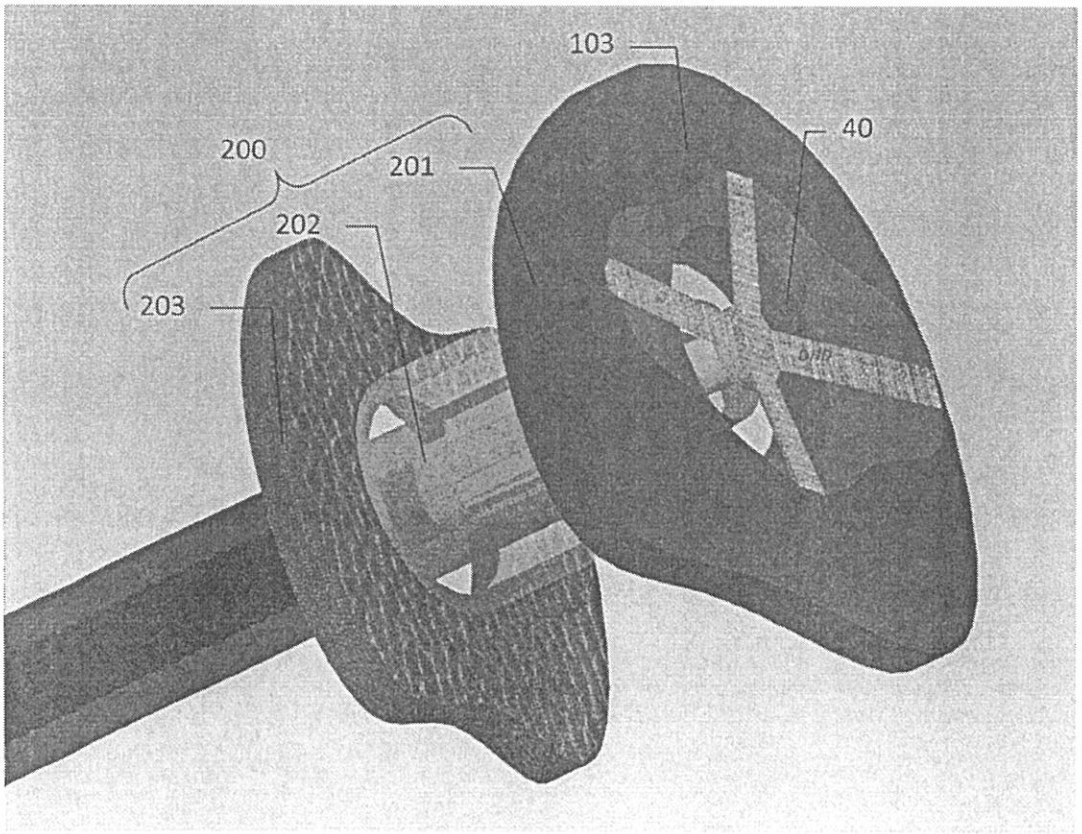

FIG. 8

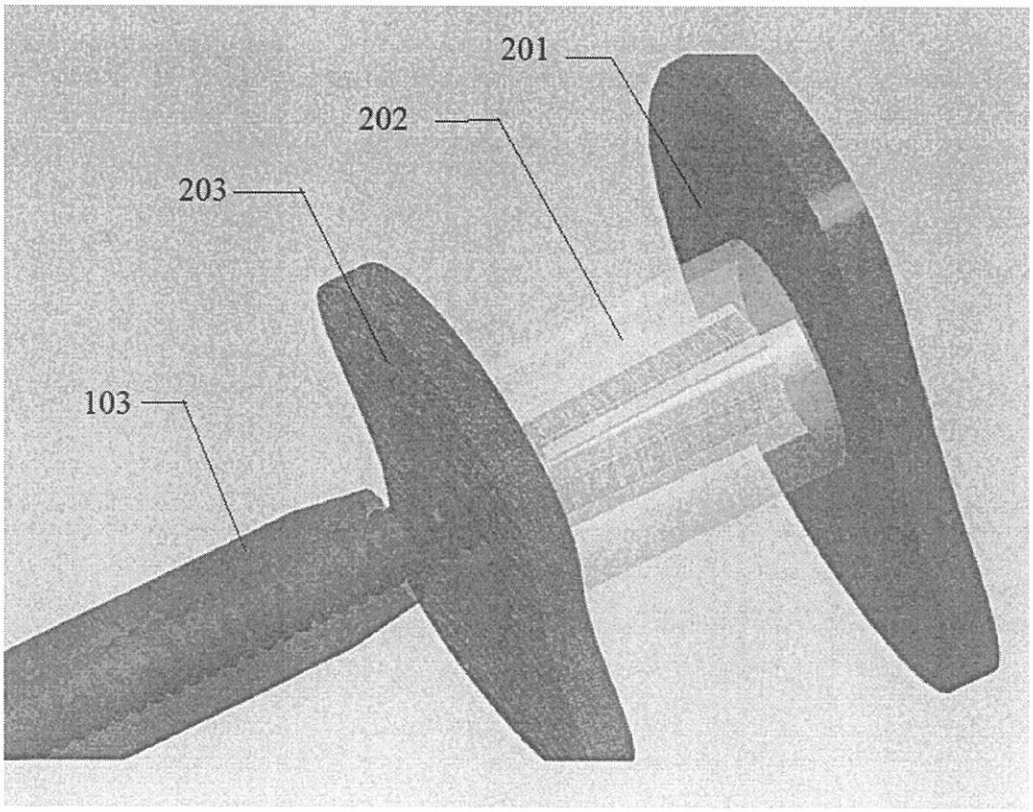

FIG. 9

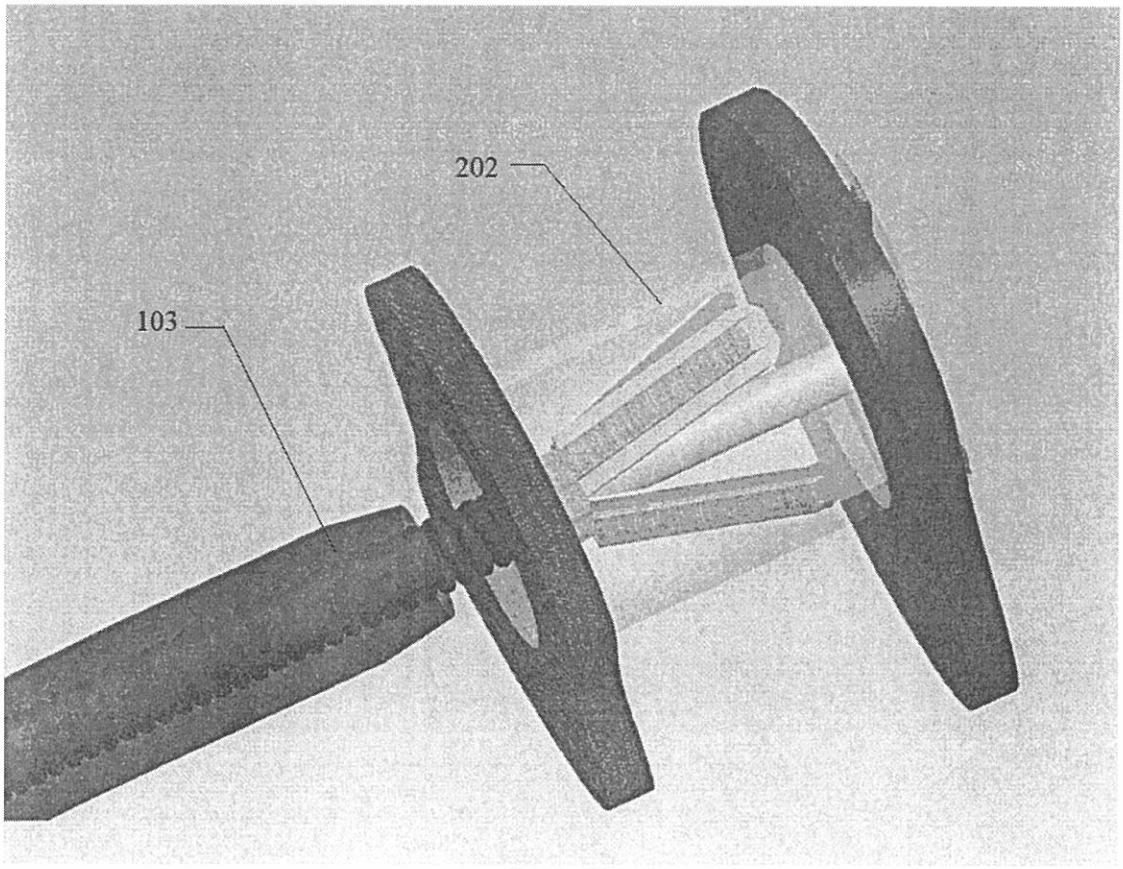

FIG. 10

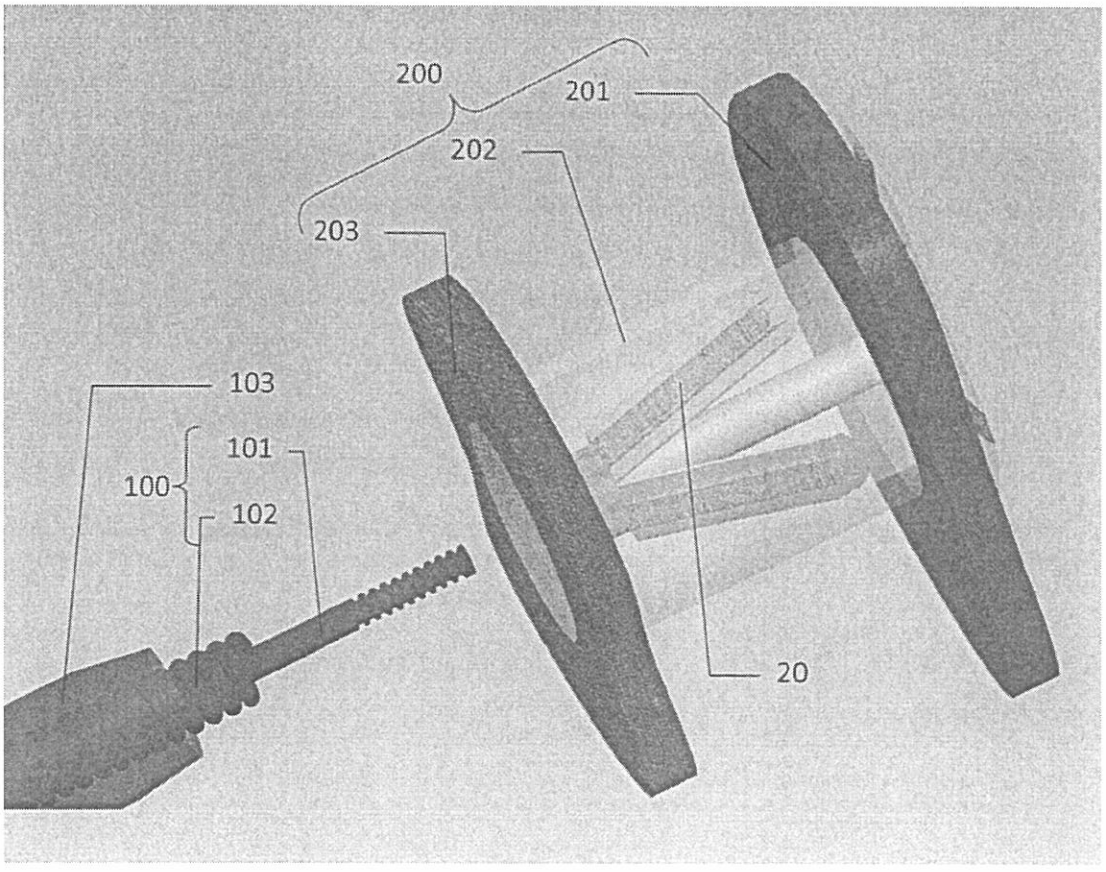

FIG. 11

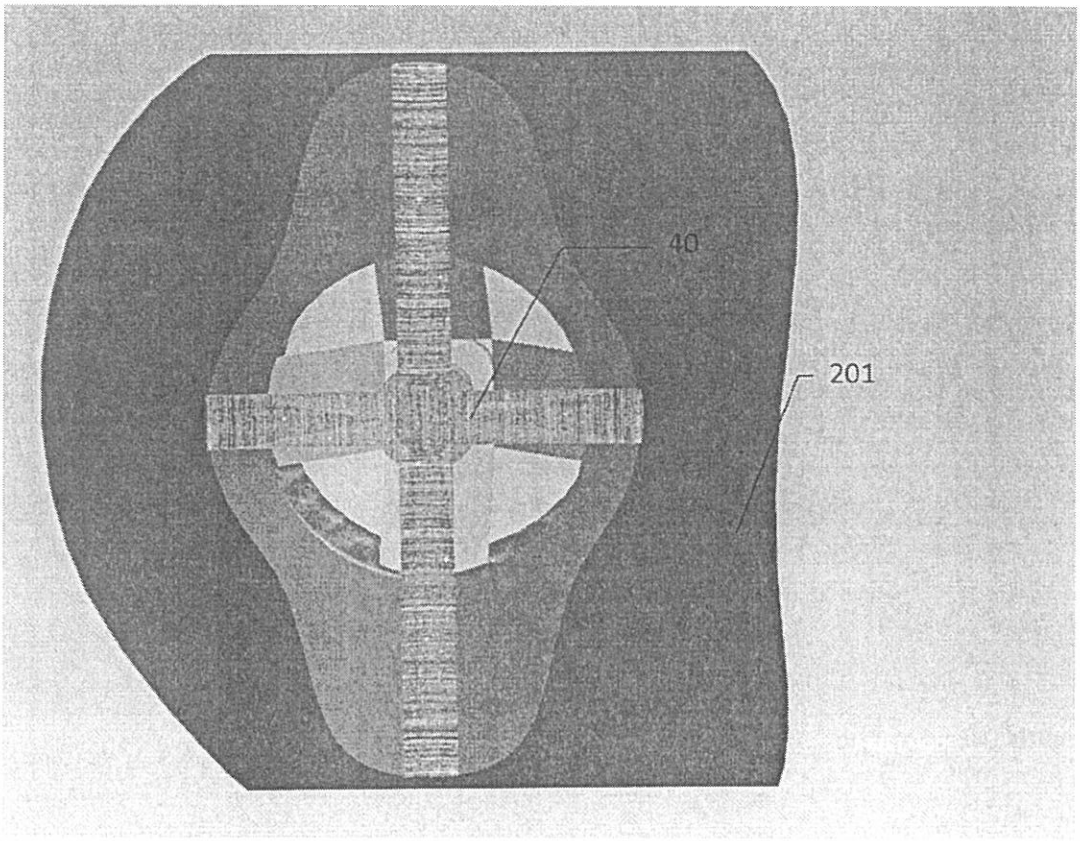

FIG. 12

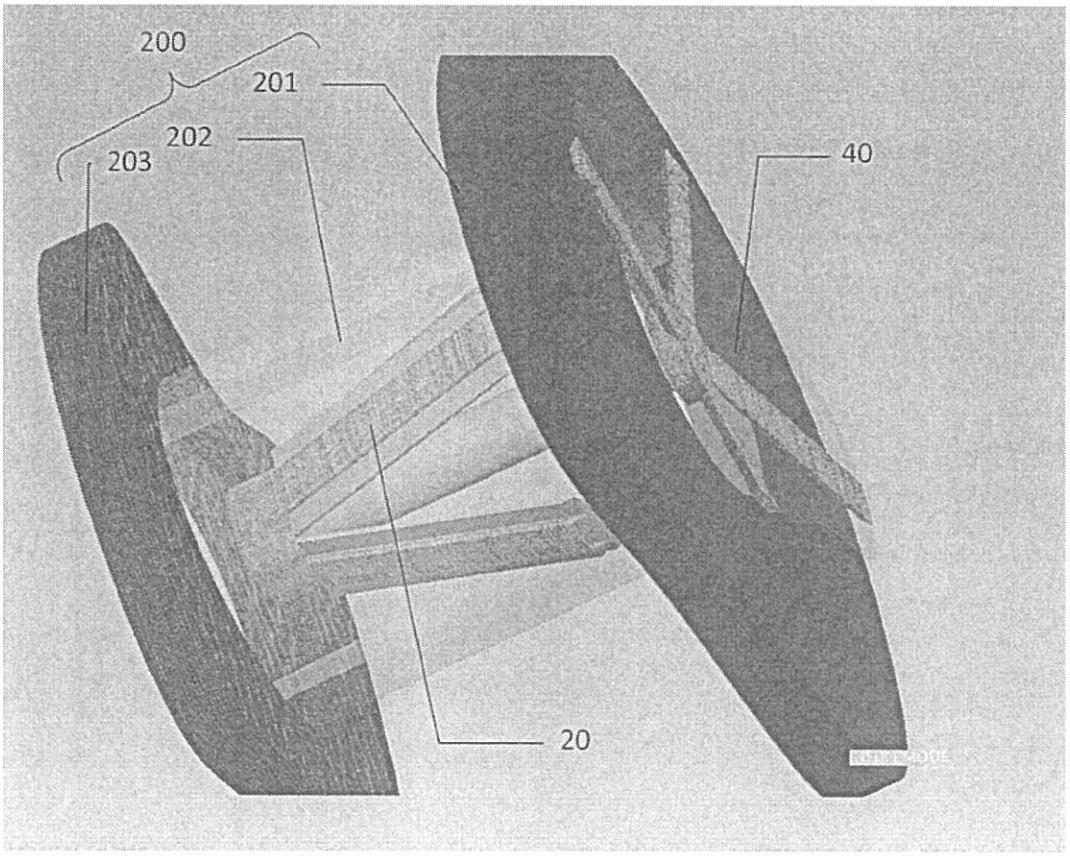

FIG. 13

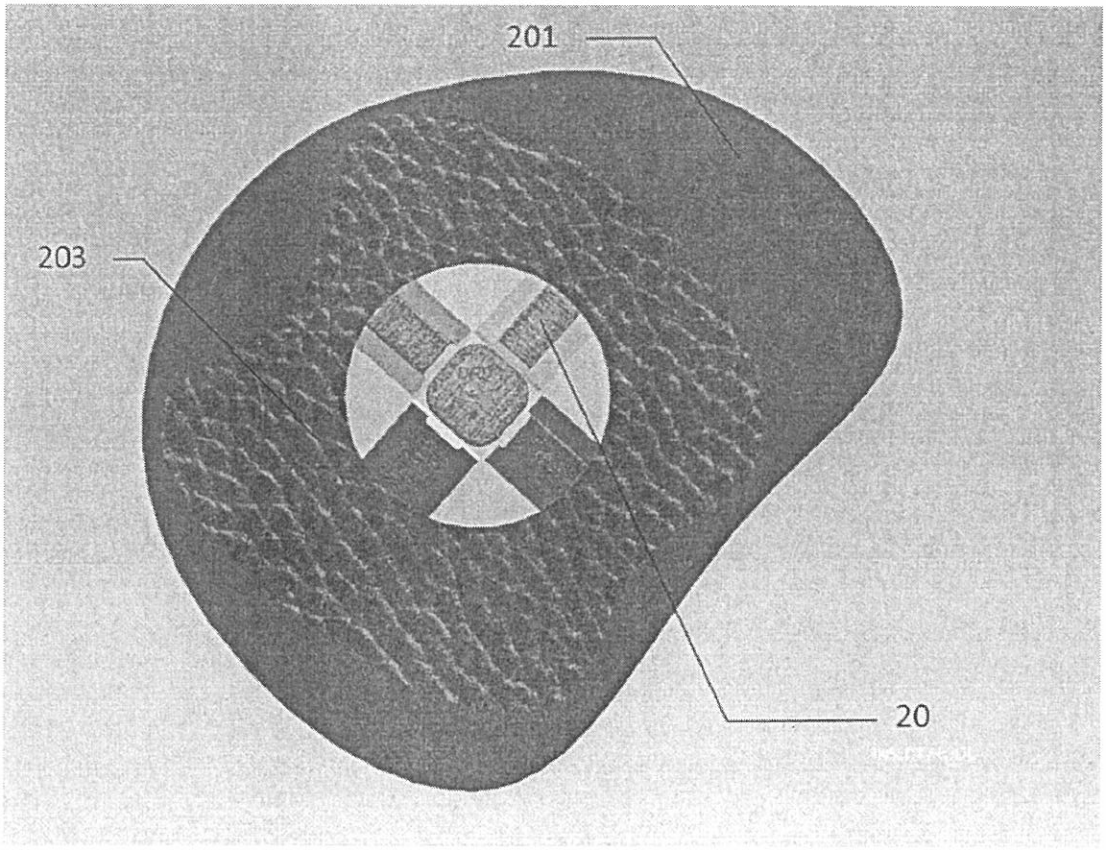

FIG. 14

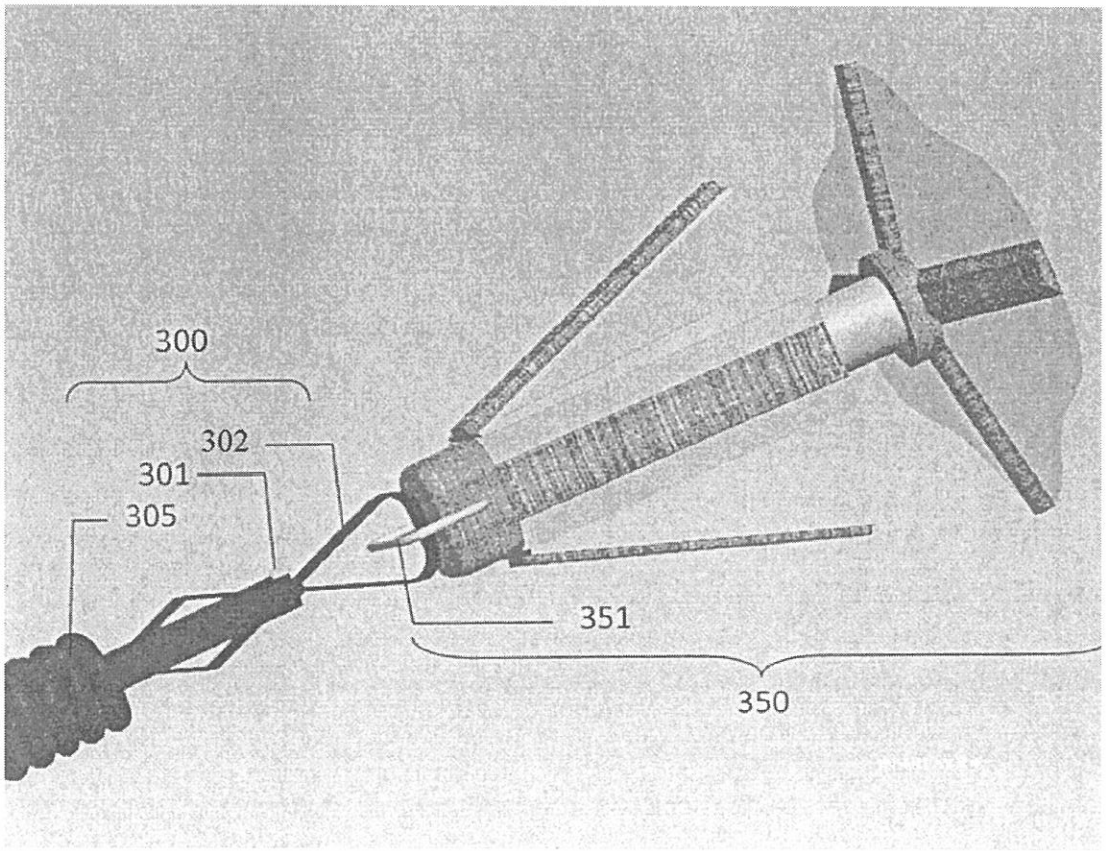

FIG. 15

