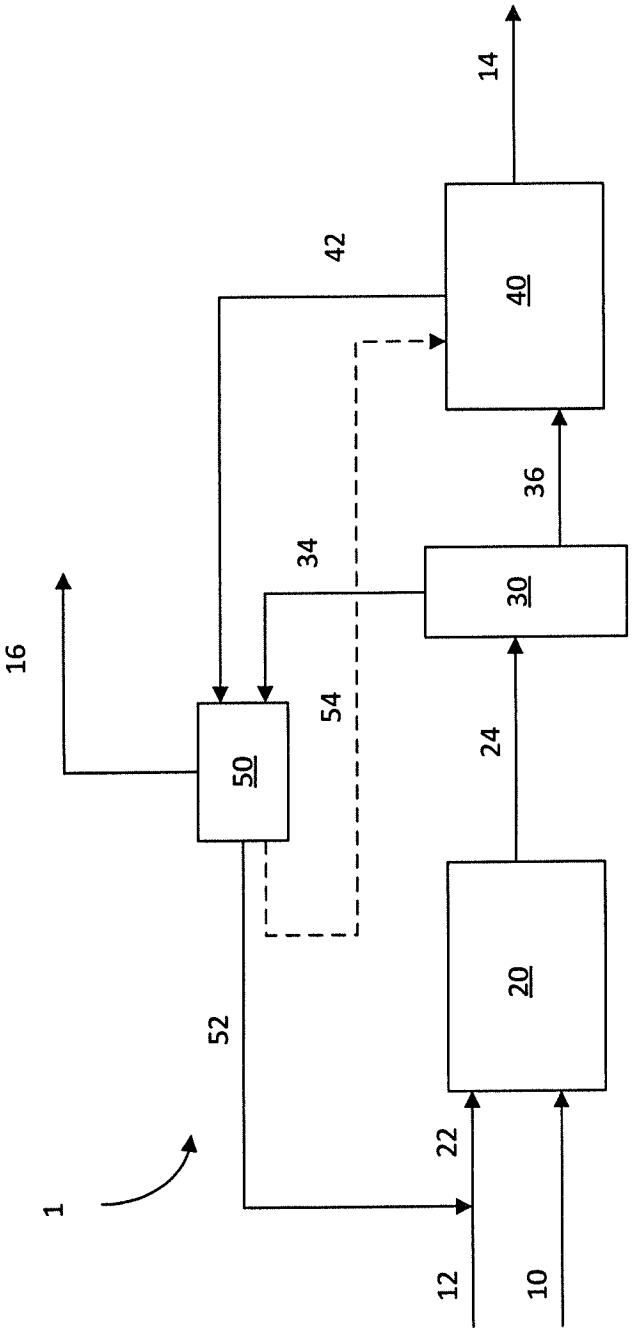

FIGURE 1