NAME :

PANDURANGA REVANKAR KRISHNA PRASAD

NUMBER OF SHEETS : 1 / 10

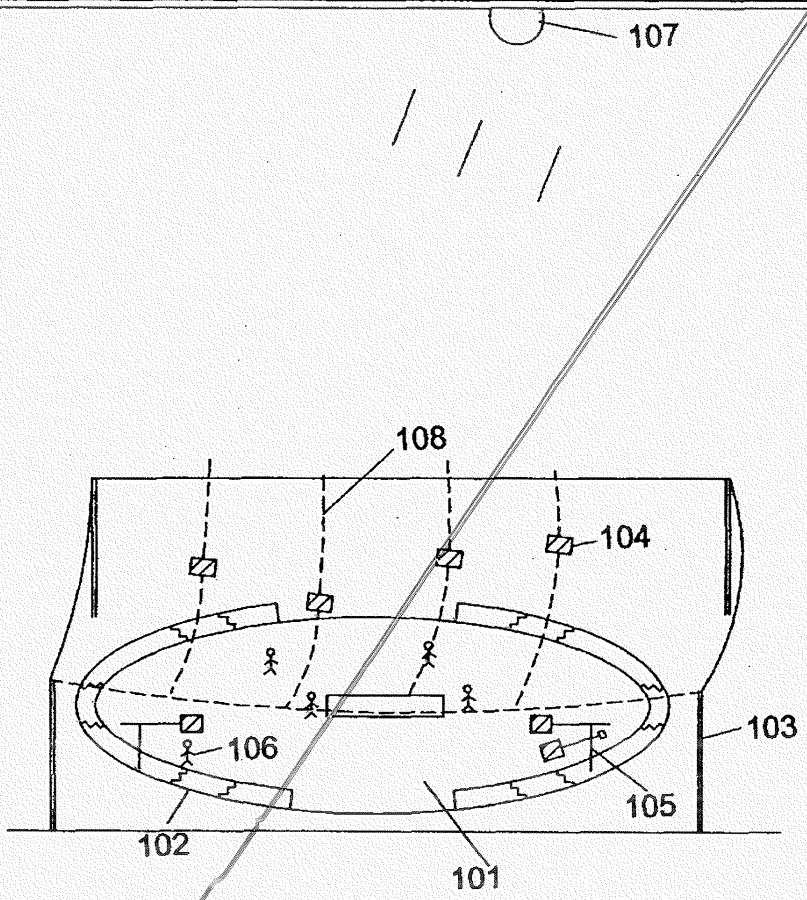

FIGURE - 1 TOP VIEW OF STADIUM
WITH DYNAMIC SHADING DEVISE

APPLICANT

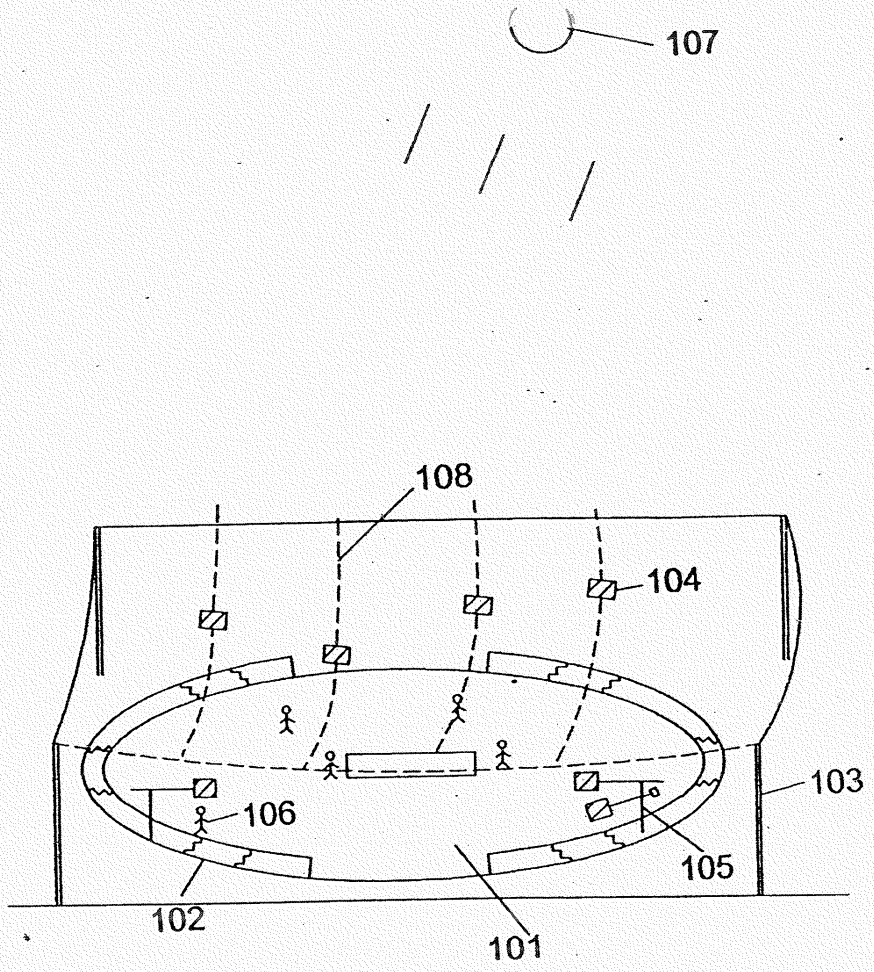

FIG 1

NAME :

PANDURANGA REVANKAR KRISHNA PRASAD

NUMBER OF SHEETS : 2 / 10

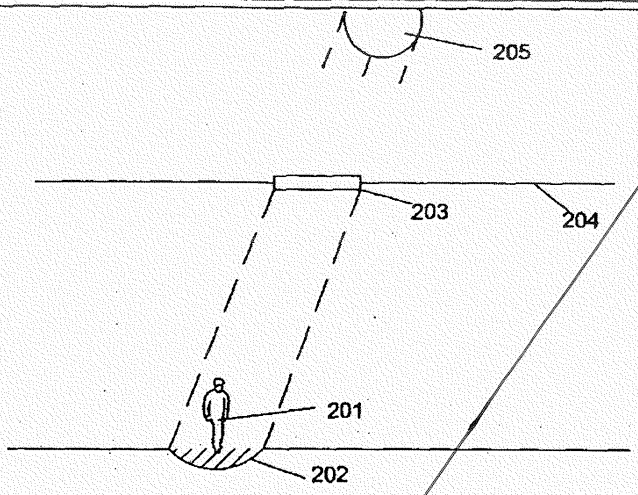

FIGURE - 2 PLAYER IN SHADED ZONE

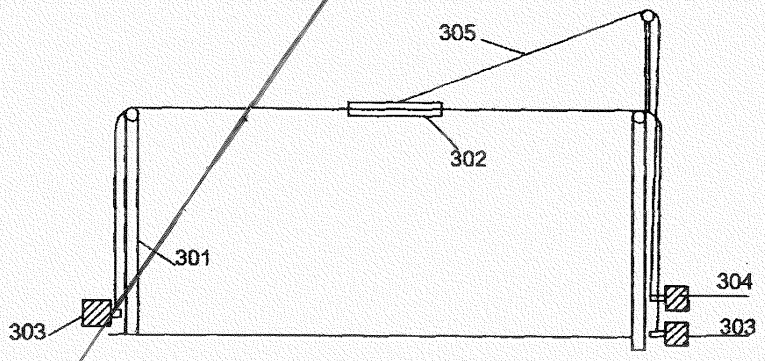

FIGURE - 3 CROSS SECTION VIEW
OF SHADING UNIT DRIVE AND POSITIONER

P. R. V.

APPLICANT

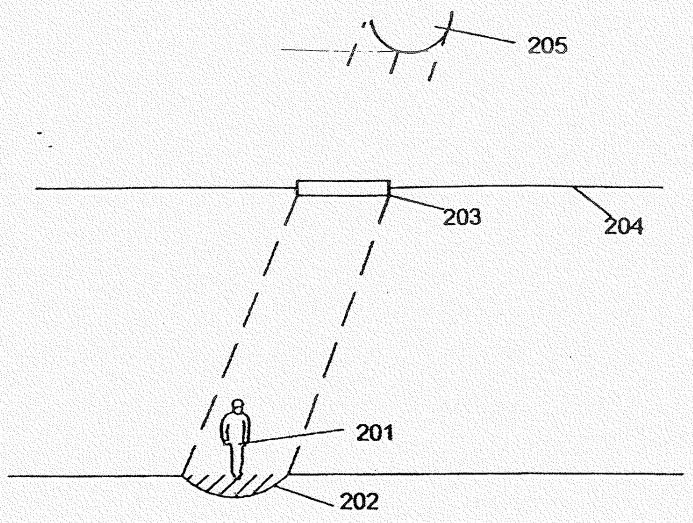

FIG 2

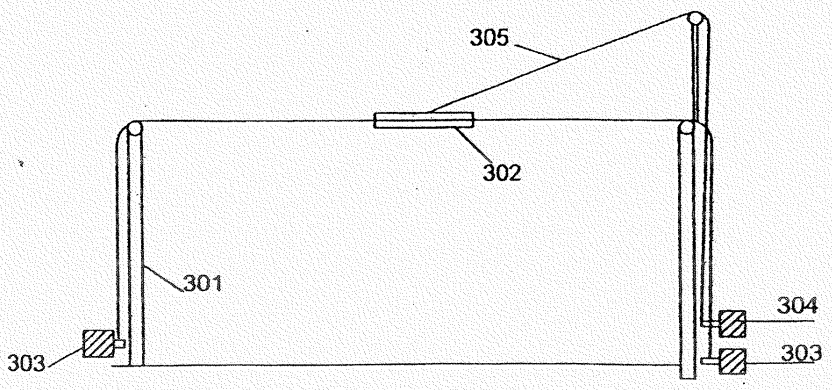

FIG 3

NAME :

PANDURANGA REVANKAR KRISHNA PRASAD

NUMBER OF SHEETS : 3 / 10

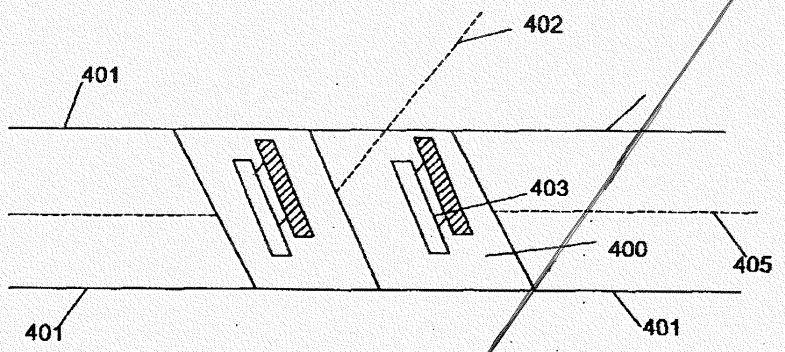

FIGURE - 4 SHADING UNIT HAVING SLOT WITH FLAP

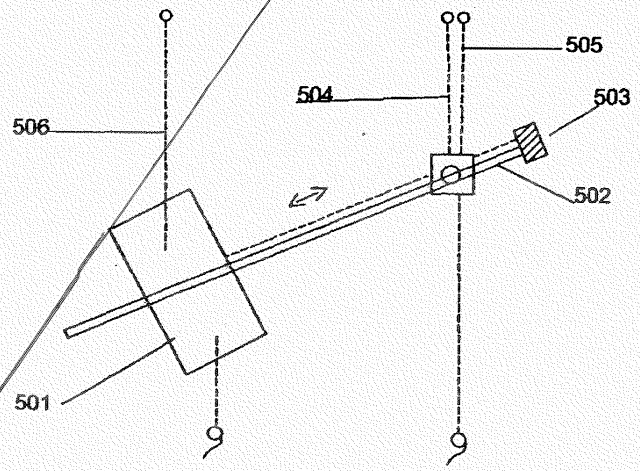

FIGURE - 5 SHADING UNIT WITH CANTILEVER ARM

P. R. Prasad

APPLICANT

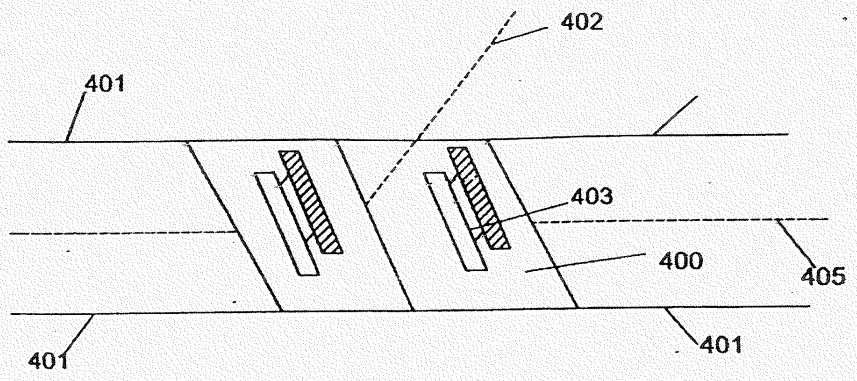

FIG 4

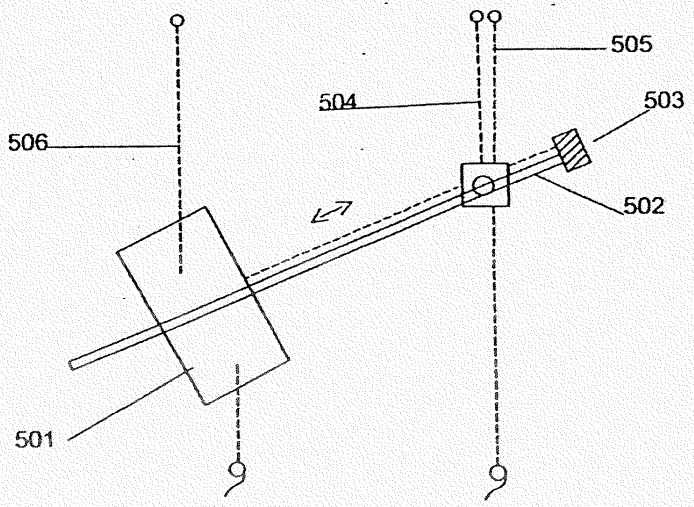

FIG 5

NAME :

PANDURANGA REVANKAR KRISHNA PRASAD

NUMBER OF SHEETS : 4 / 10

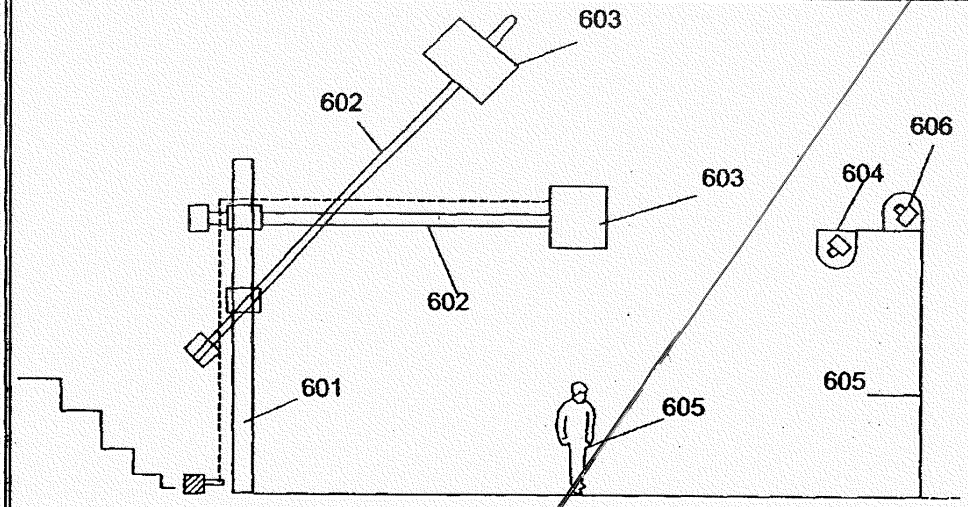

FIGURE:6- CANTILEVER ARM WITH SHADDING UNIT NEAR BOARDER AND CAMERA IN GIMBAL UNIT.

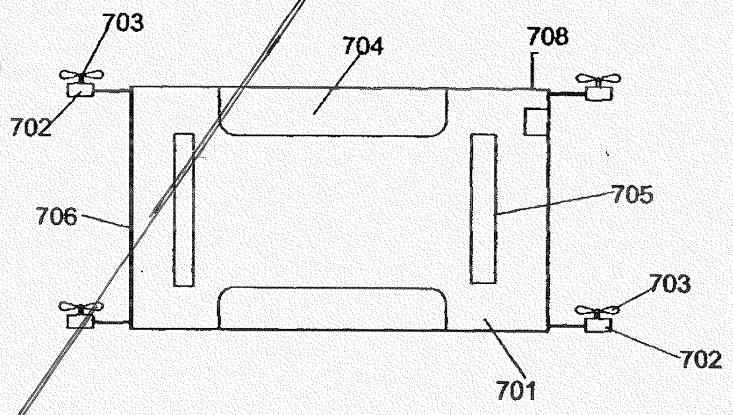

FIGURE:7 SHADDING UNIT WITH PROPELLERS AND BOUYANCY BALLON

APPLICANT

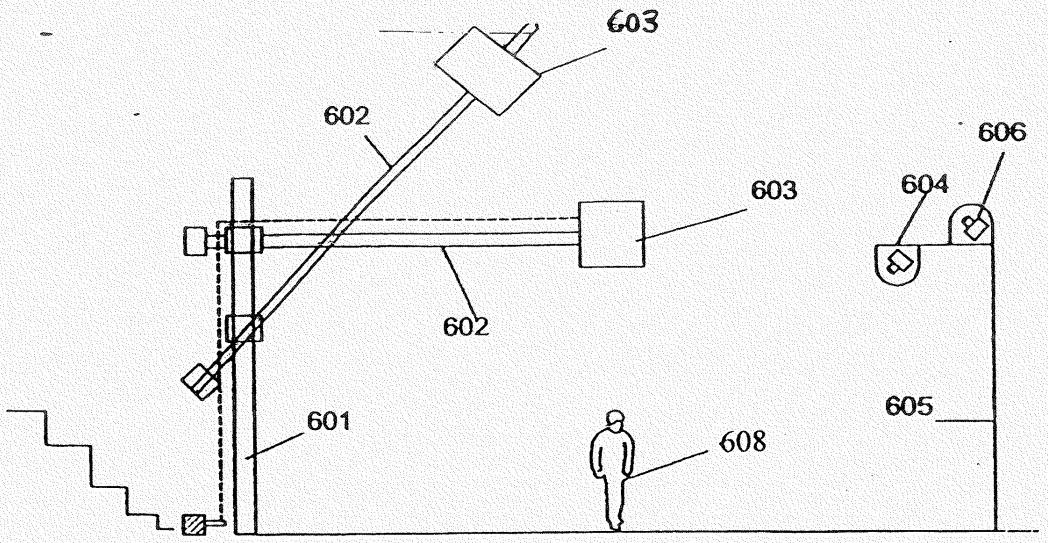
603
602
606
603
604
602
605
601
608

FIG 6

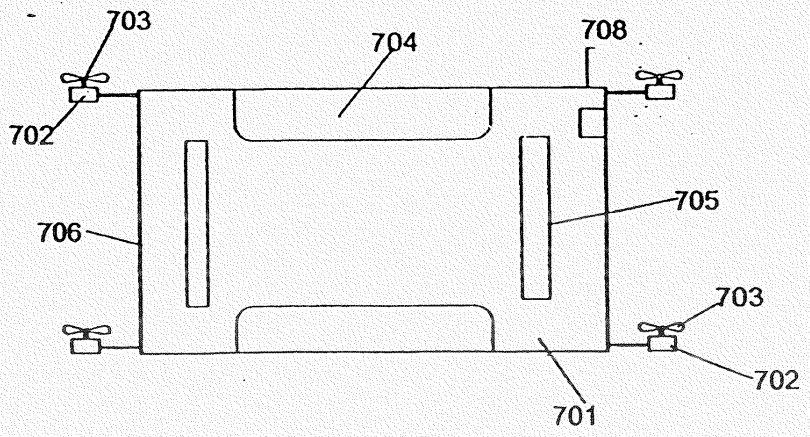
703
704
708
702
705
706
703
702
701

FIG 7

NAME :

PANDURANGA REVANKAR KRISHNA PRASAD

NUMBER OF SHEETS : 5 / 10

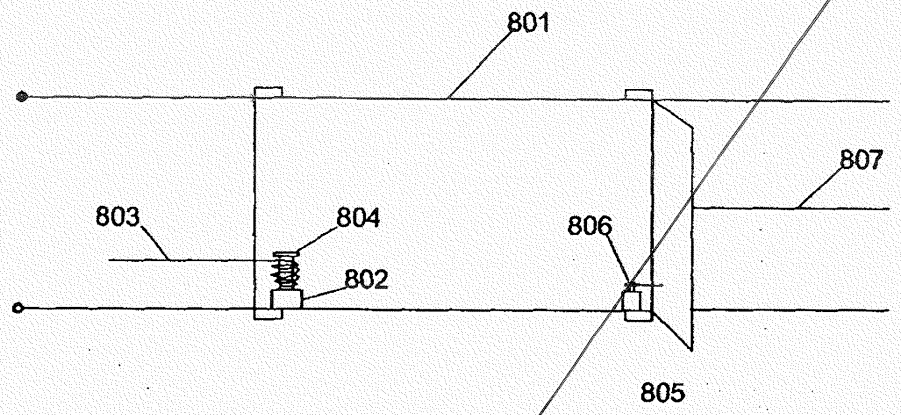

FIGURE:8 SHADDING UNIT WITH ON BOARD MOTOR DRIVE

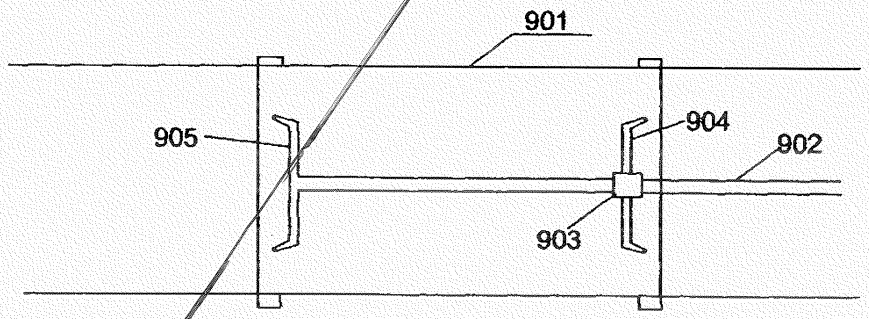

FIGURE:9 SHADING UNIT WITH PNEUMATIC DRIVE

P. R. K. Sharma

APPLICANT

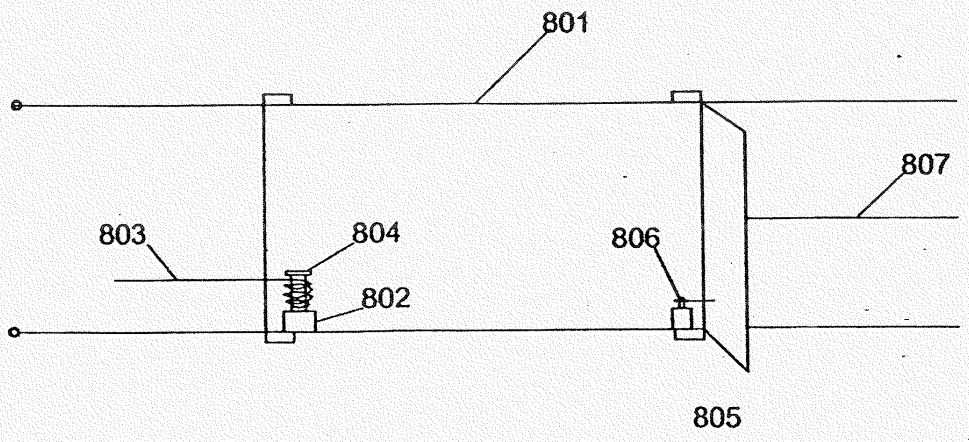

FIG 8

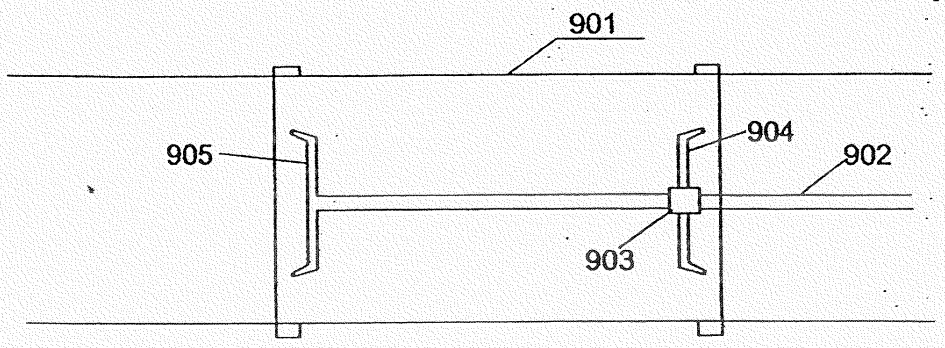

FIG 9

NAME :

PANDURANGA REVANKAR KRISHNA PRASAD

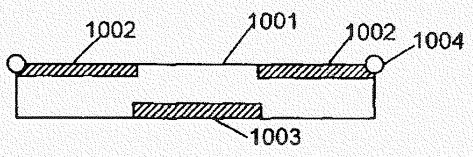

FIGURE -10 CROSS SECTION VIEW

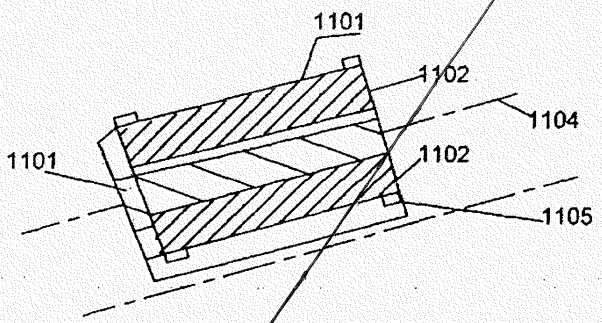

FIGURE-11 SIDE VIEW OF DOUBLE LEYAR BASED SHADING UNIT.

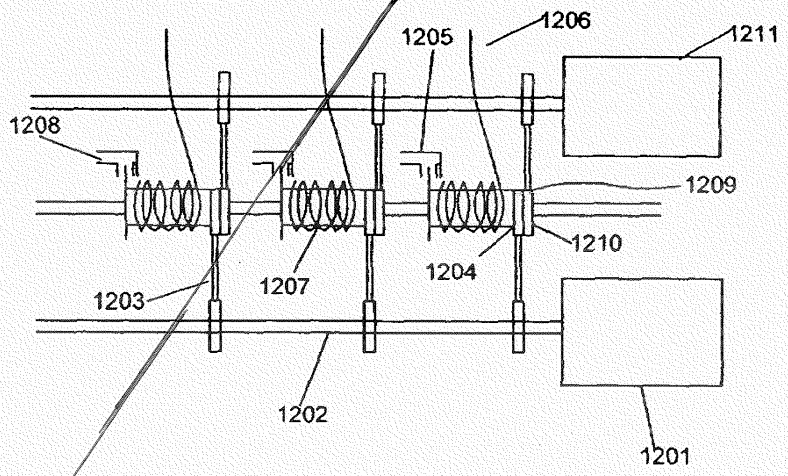

FIGURE -12 VIEW OF MULTIPLE CABLE SPOOL DRIVE

APPLICANT

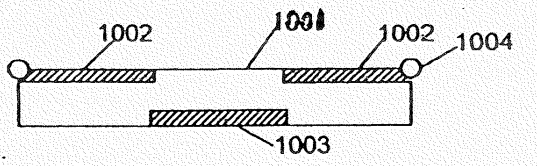

FIG 10

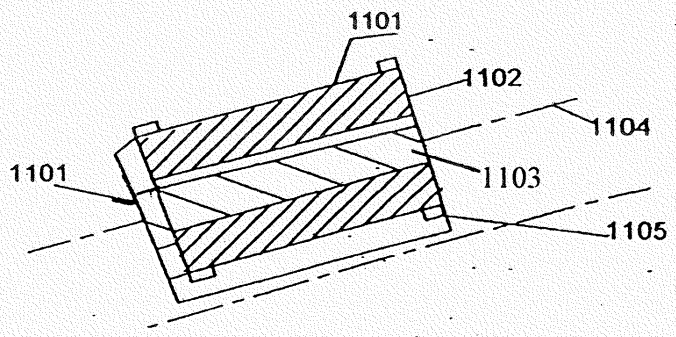

FIG 11

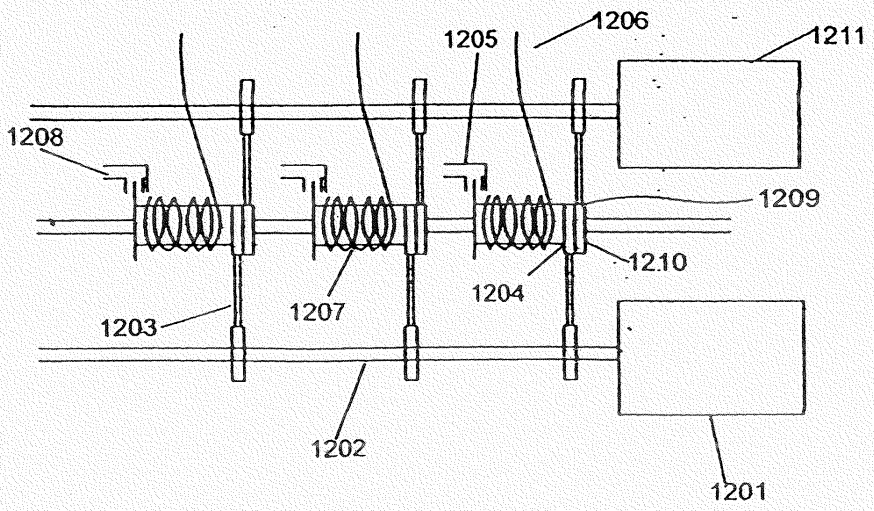

FIG 12

NAME :

PANDURANGA REVANKAR KRISHNA PRASAD

NUMBER OF SHEETS : 7 / 10

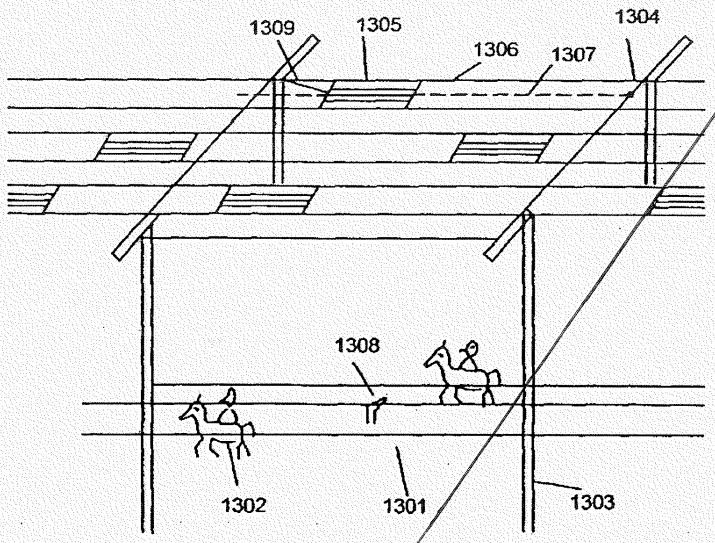

FIGURE -13 SYSTEM VIEW OF ENTIRE DEVISE FOR RACE COURSE

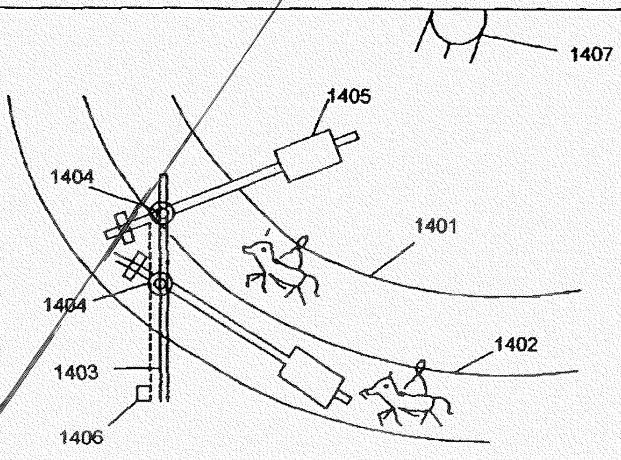

FIGURE -14 SYSTEM VIEW OF DYNAMIC SHADING WITH CANTILEVER UNIT AT CURVES

P. K Krishna

APPLICANT

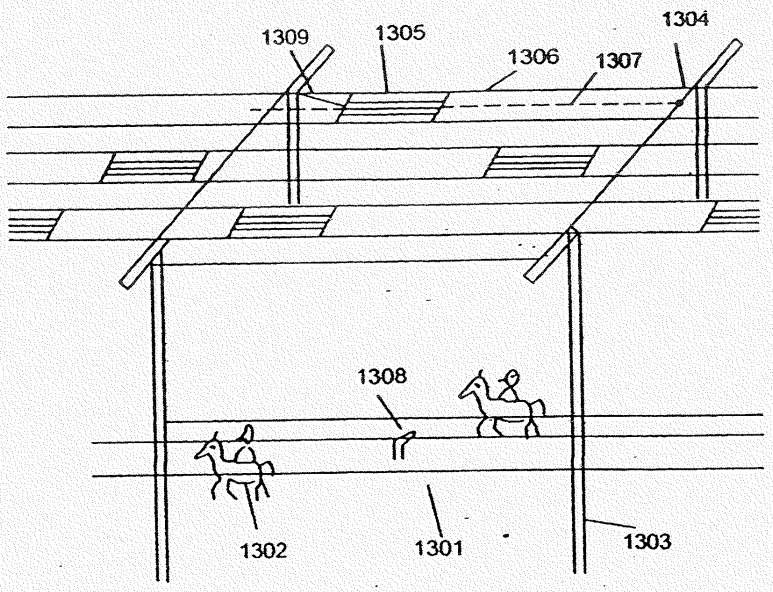
1309
1305
1306
1307
1304
1308
1302
1301
1303

FIG 13

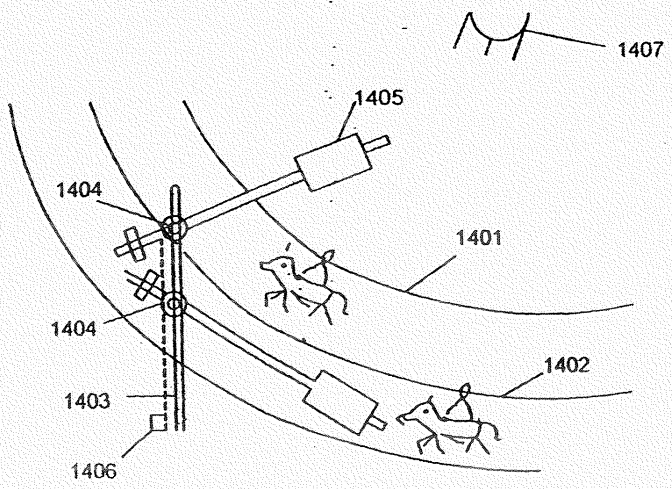
1407
1405
1404
1401
1404
1402
1403
1406

FIG 14

NAME :

PANDURANGA REVANKAR KRISHNA PRASAD

NUMBER OF SHEETS : 8 / 10

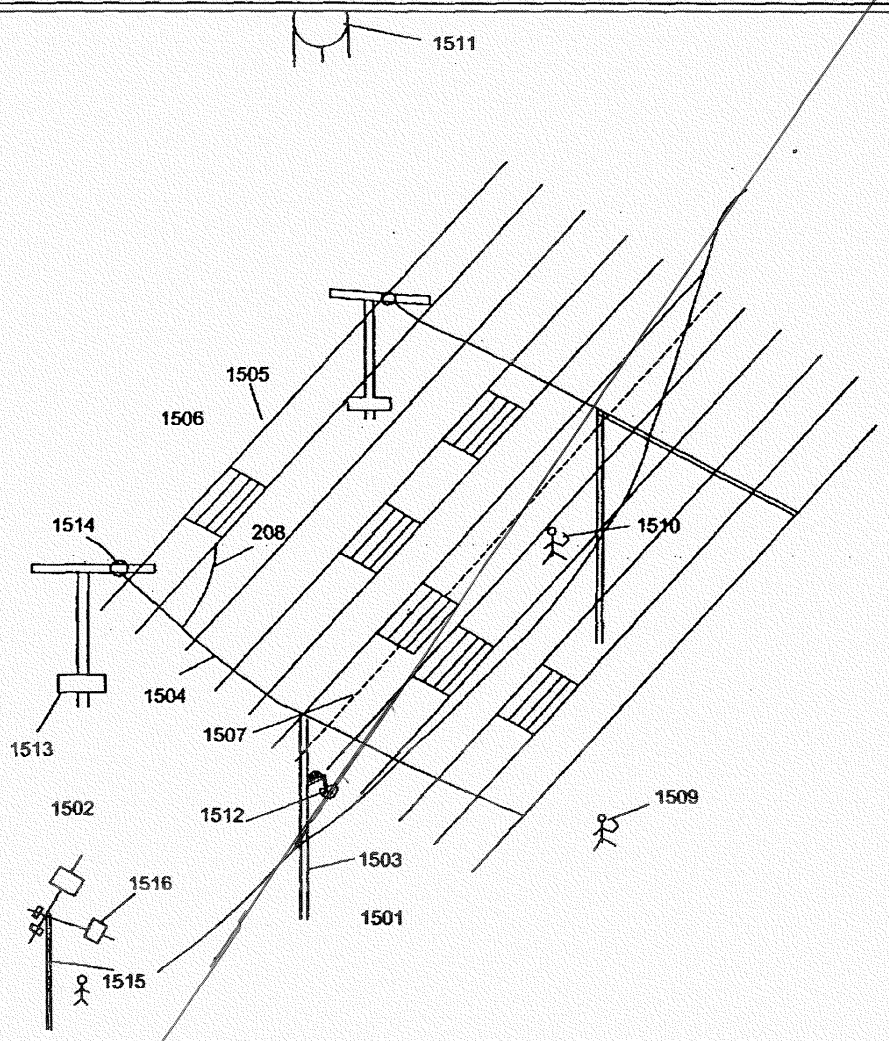

FIGURE 15 SYSTEM VIEW OF ENTIRE DEVISE AT BEACH WITH FLOATING TOWER CABLE HOLD

P R K

APPLICANT

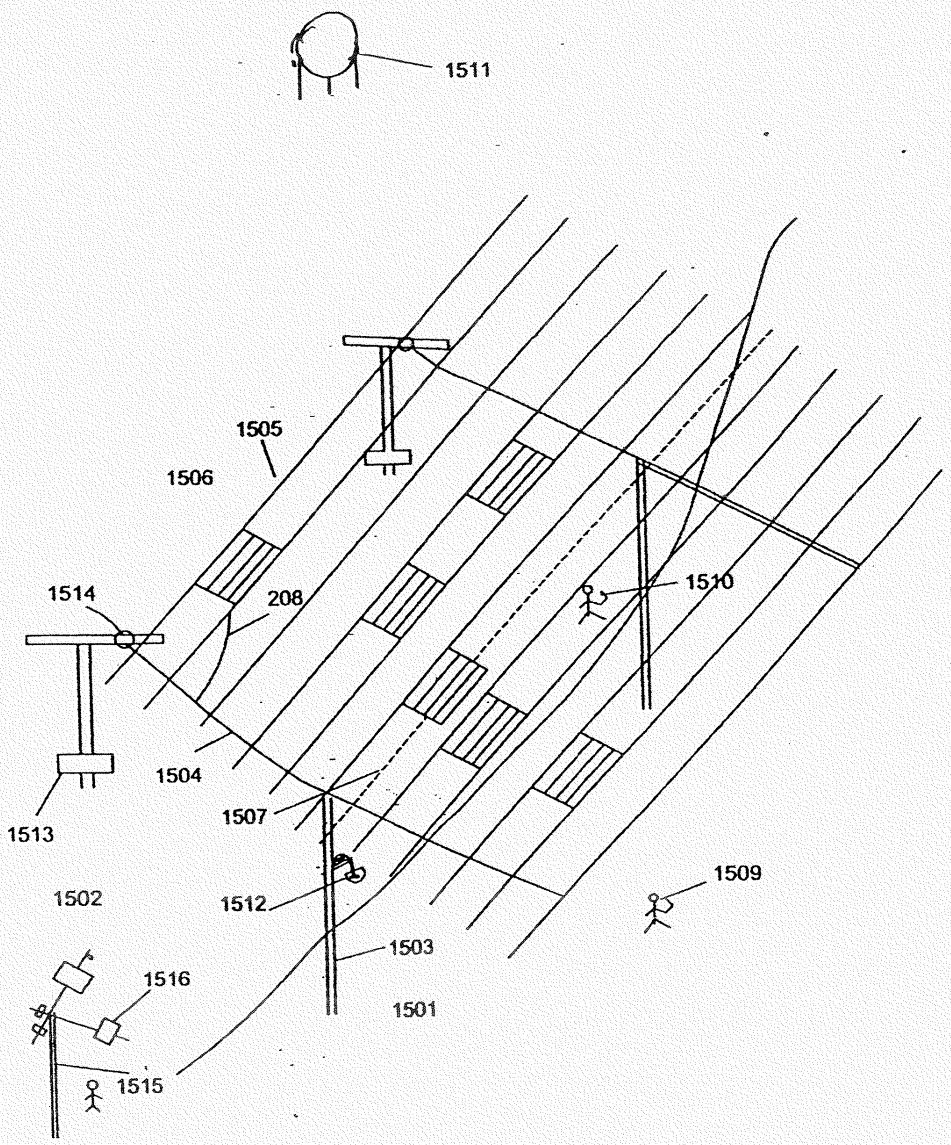
1511
1505
1506
1514
208
1510
1504
1507
1513
1509
1502
1512
1503
1516
1501
1515

FIG 15

NAME :

PANDURANGA REVANKAR KRISHNA PRASAD

NUMBER OF SHEETS : 9 / 10

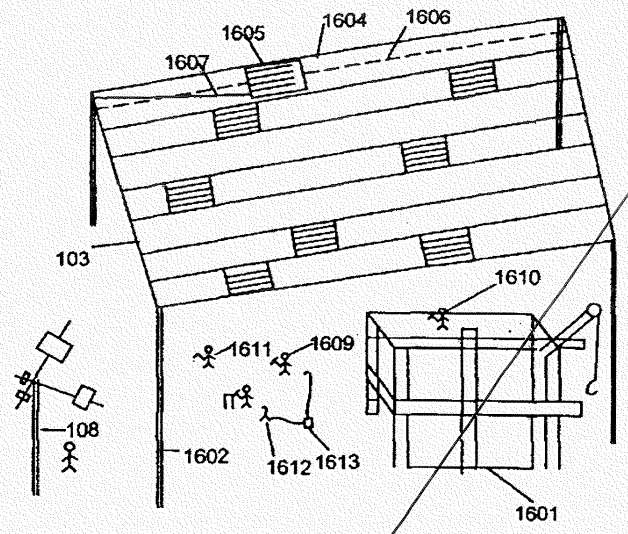

FIGURE16 SYSTEM VIEW OF ENTIRE DEVICE FOR CONSTRUCTION WORKS

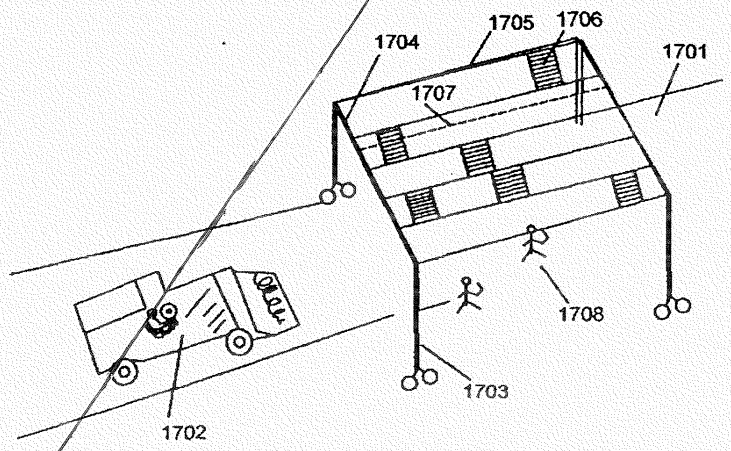

FIGURE 17 SYSTEM VIEW OF DYNAMIC SHADING AT ROAD UNDER CONSTRUCTION

APPLICANT

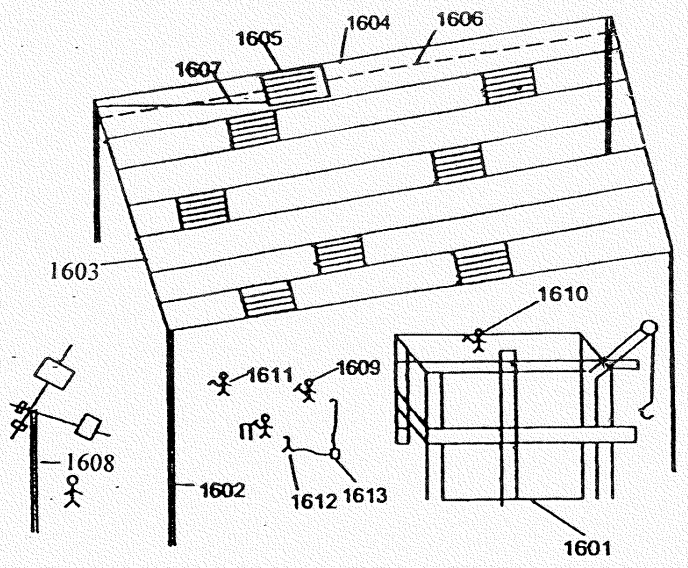
1605
1604
1606
1607
1603
1610
1611
1609
1608
1602
1612
1613
1601

FIG 16

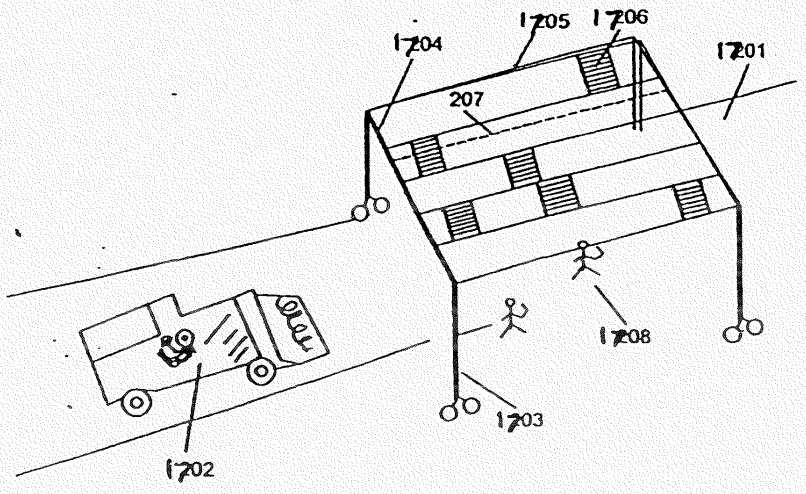
1705
1706
1704
1701
207
1708
1703
1702

FIG 17

NAME :

PANDURANGA REVANKAR KRISHNA PRASAD

NUMBER OF SHEETS : 10 / 10

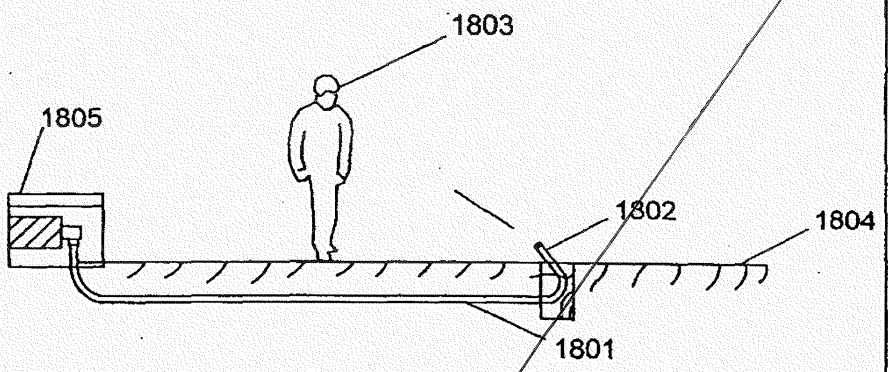

FIGURE-18 PULSED COLD AIRPIPELINE WITH ROTATING NOZZLE

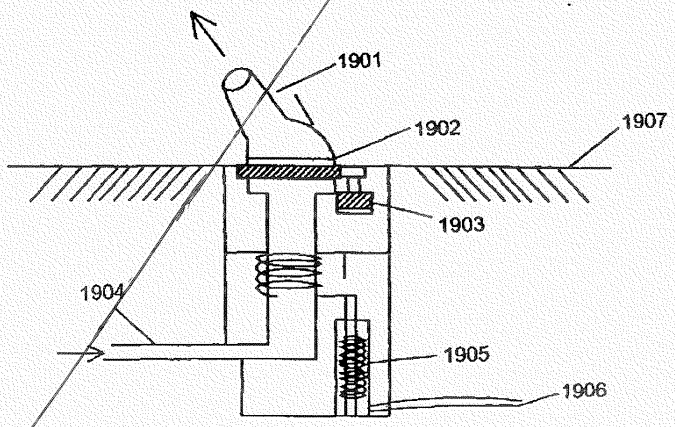

FIGURE 19 COLD AIR NOZZLE WITH ROTATION DRIVE MOTOR AND RETRACTION SOLENOID

P. R. Krishna

APPLICANT

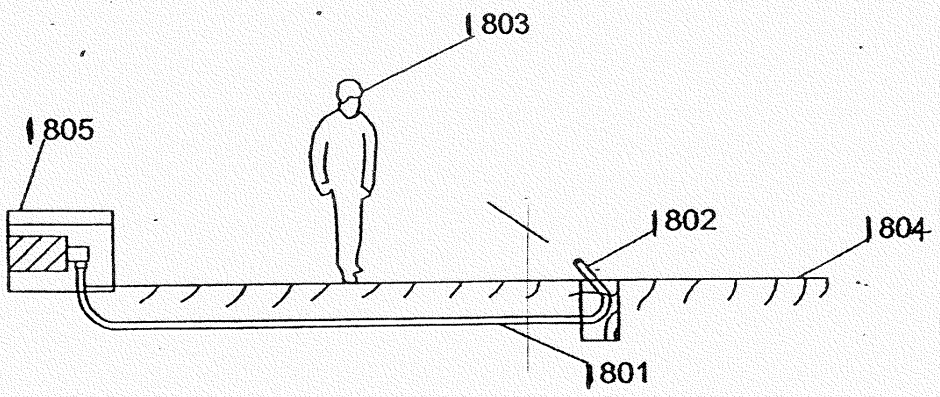

FIG 18

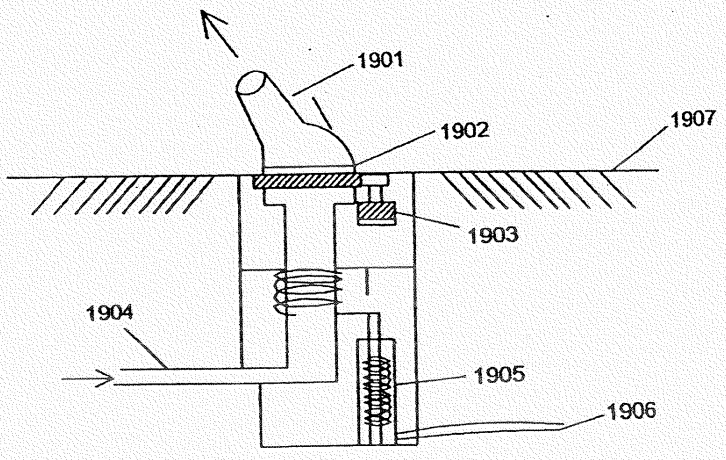

FIG 19