Fig. 1A
prior art

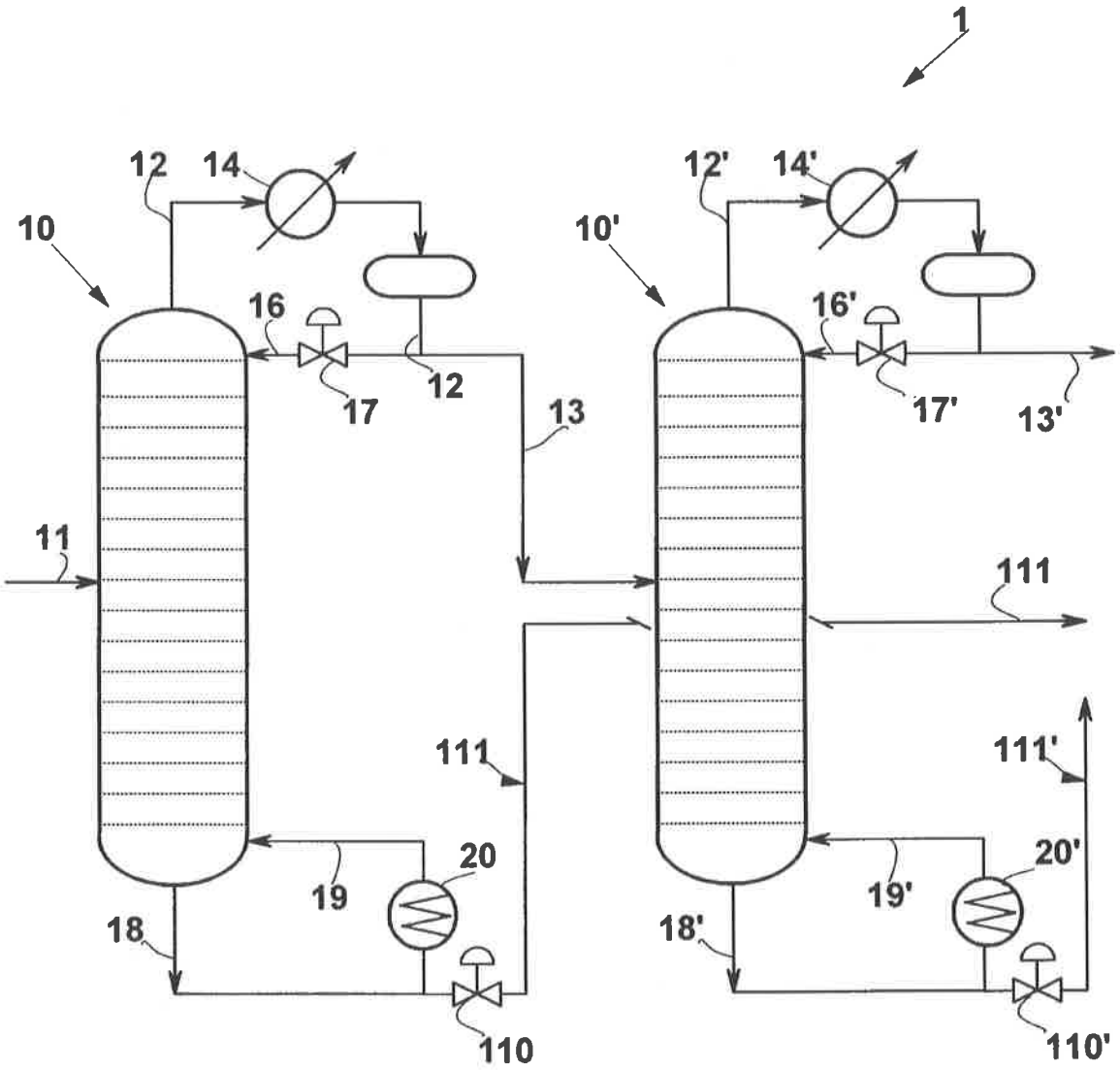

Fig. 1B

prior art

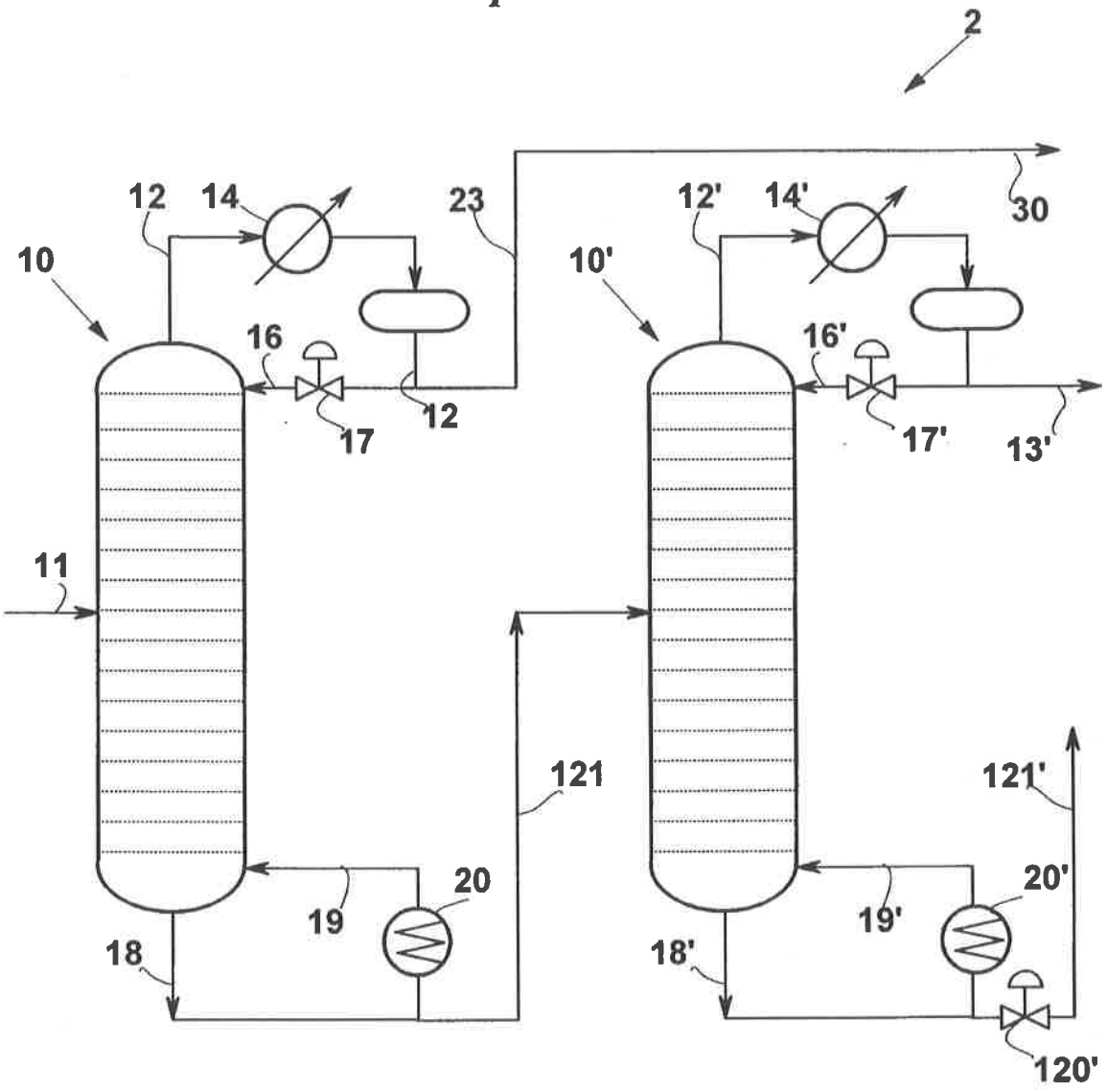

Fig. 2A

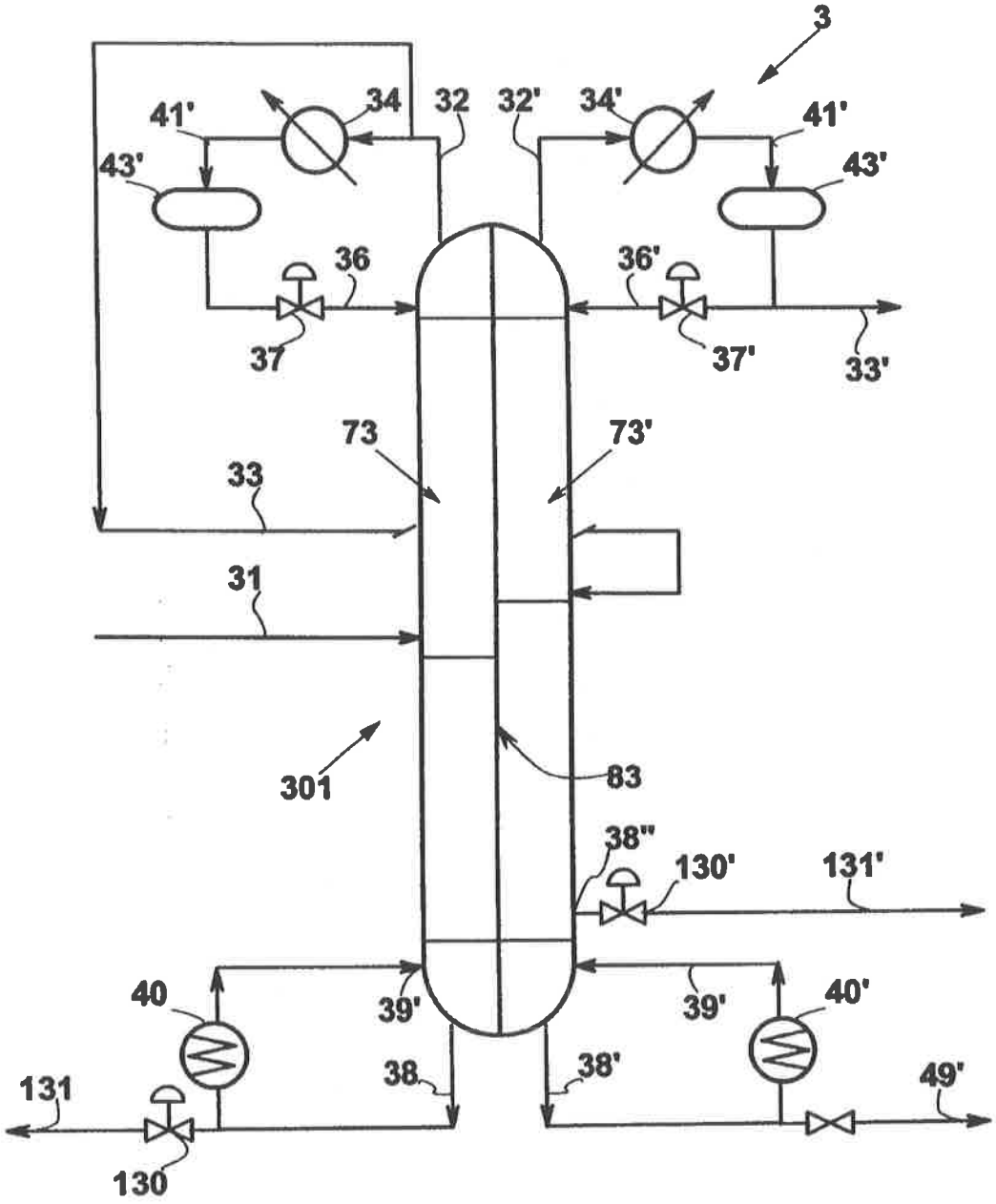
3
41'
34
32
32'
34'
41'
43'
43'
36
36'
37
37'
33'
73
73'
33
31
301
83
38"
130'
131'
40
39'
39'
40'
131
38
38'
49'
130

Fig. 2B

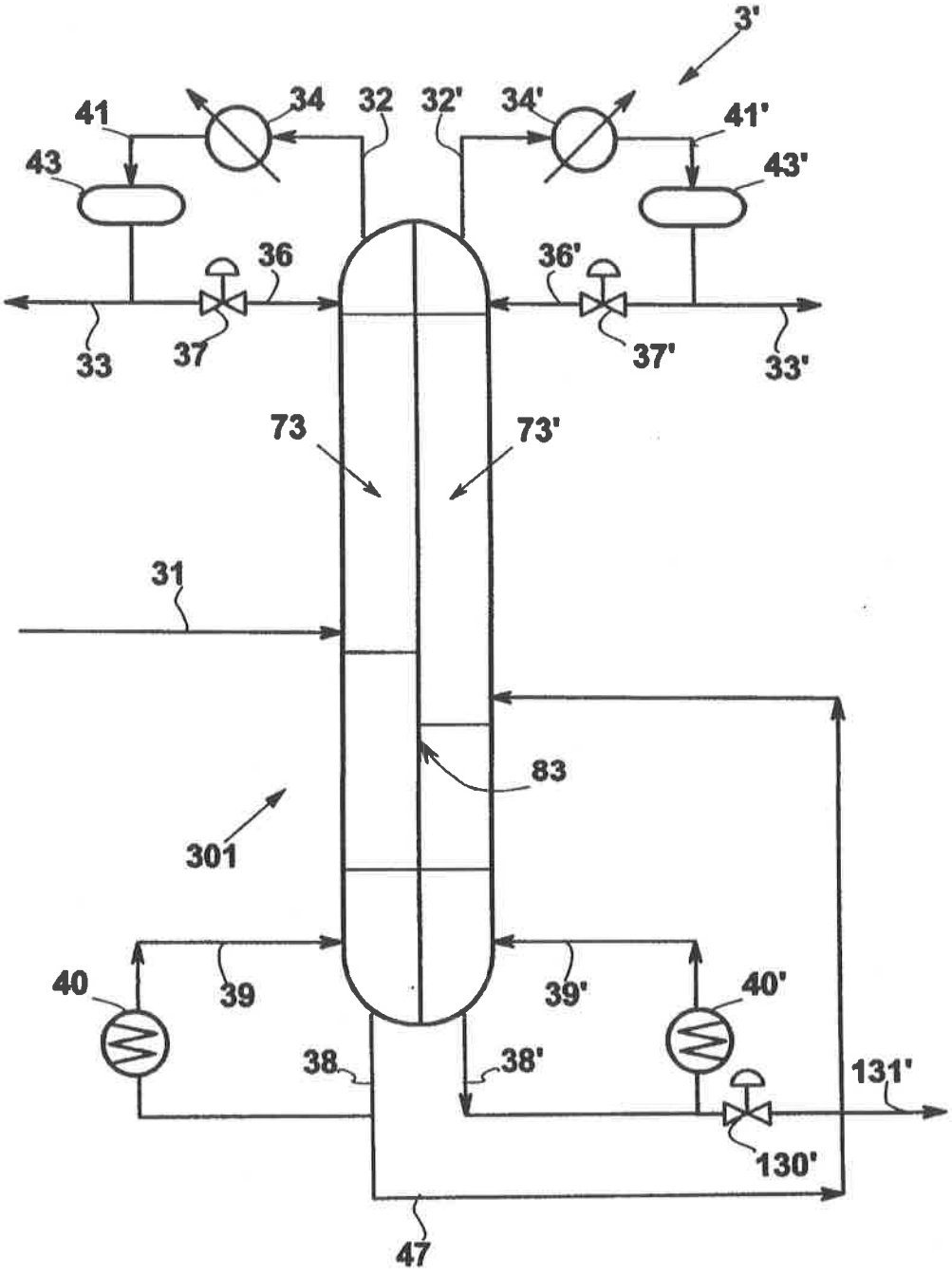
3'
41
34
32
32'
34'
41'
43
43'
36
36'
33
37
37'
33'
73
73'
31
83
301
40
39
39'
40'
38
38'
131'
130'
47

Fig. 3A



Fig. 3C

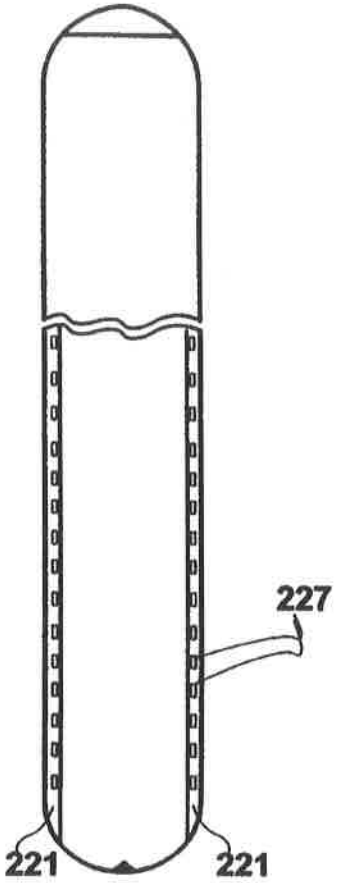

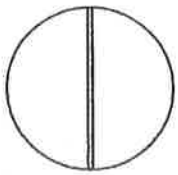

Fig. 3B

Fig. 3D

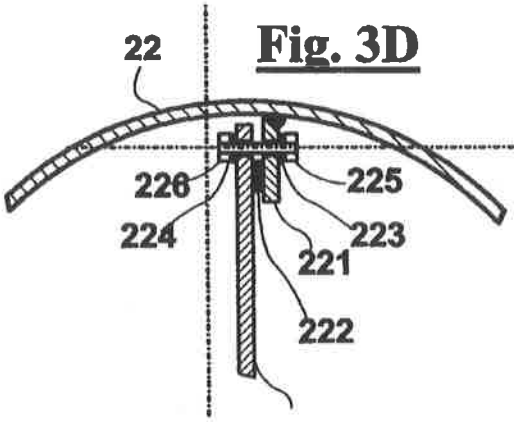

Fig. 3E

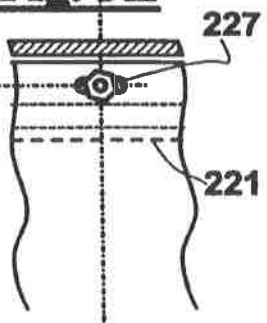

Fig. 4

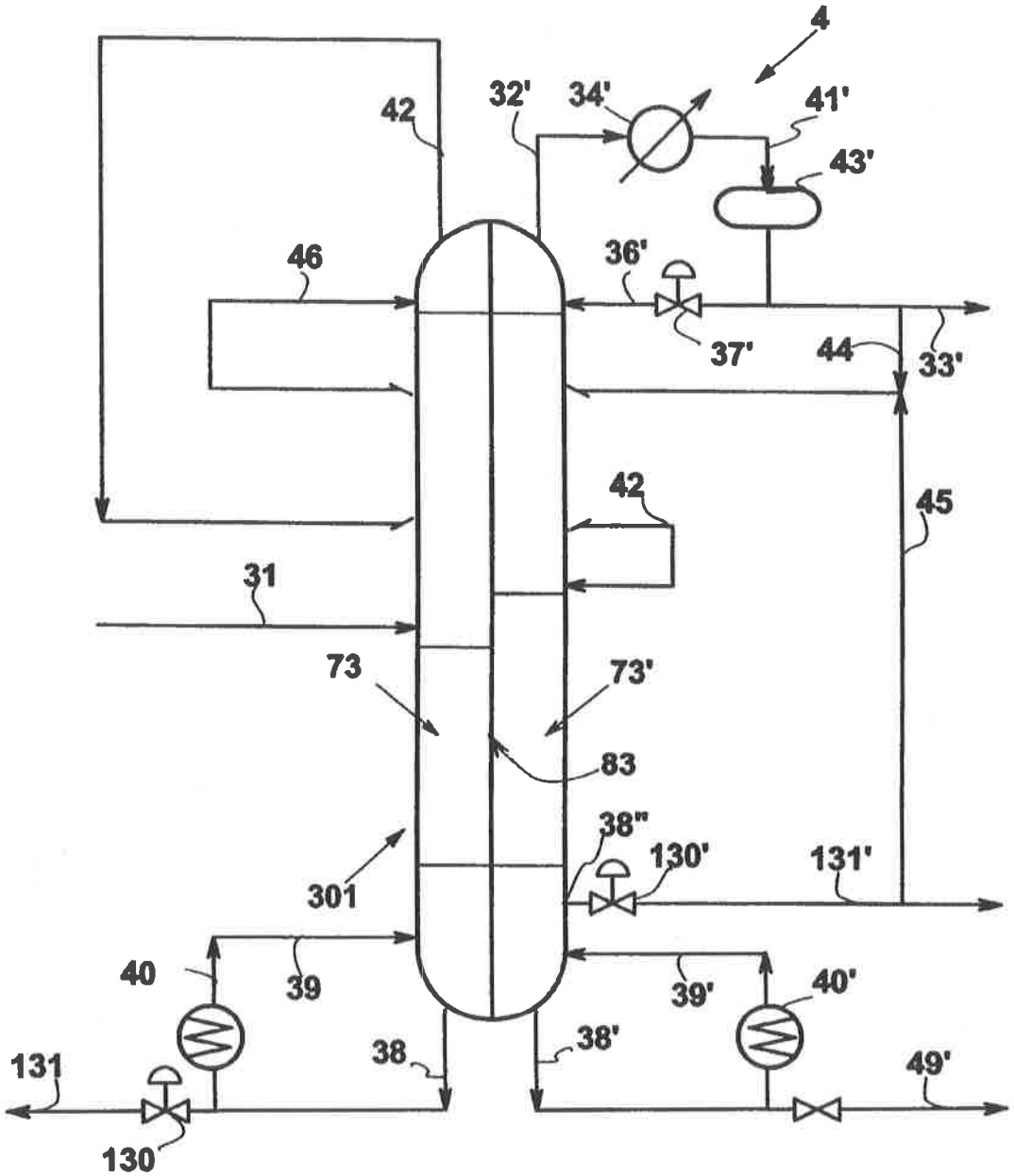
4
42
32'
34'
41'
43'
46
36'
37'
44
33'
42
45
31
73
73'
83
38"
130'
131'
301
40
39
39'
40'
131
38
38'
49'
130

Fig. 5

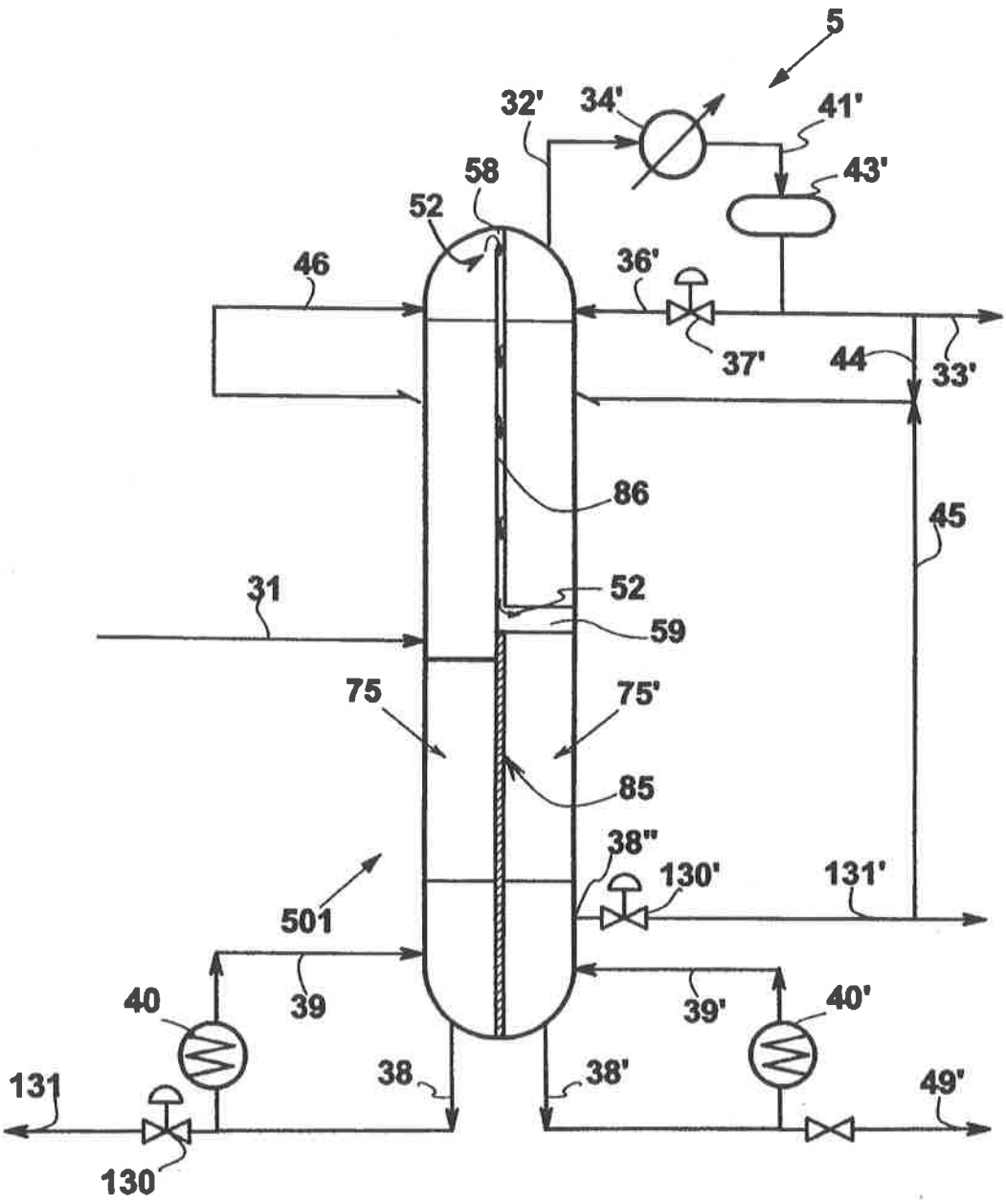
5
32'
34'
41'
43'
58
52
46
36'
37'
44
33'
86
45
31
52
59
75
75'
85
38"
130'
131'
501
40
39
39'
40'
131
38
38'
49'
130

Fig. 6

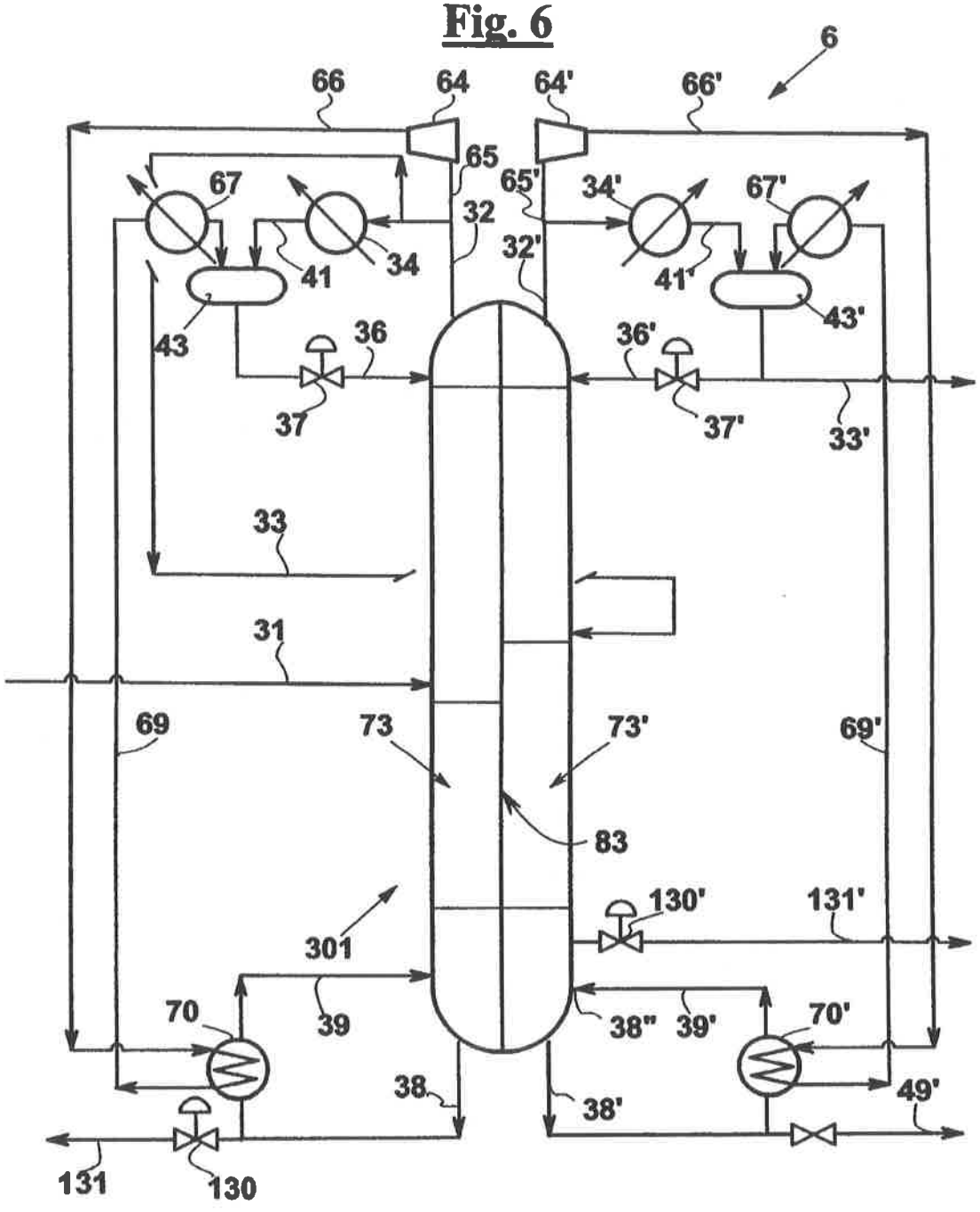
6
66
64
64'
66'
65
65'
67
34'
67'
32
32'
34
41
41'
43
43'
36
36'
37
37'
33'
33
31
69
73
73'
69'
83
130'
131'
301
70
39
38"
39'
70'
38
38'
49'
131
130

Fig. 7

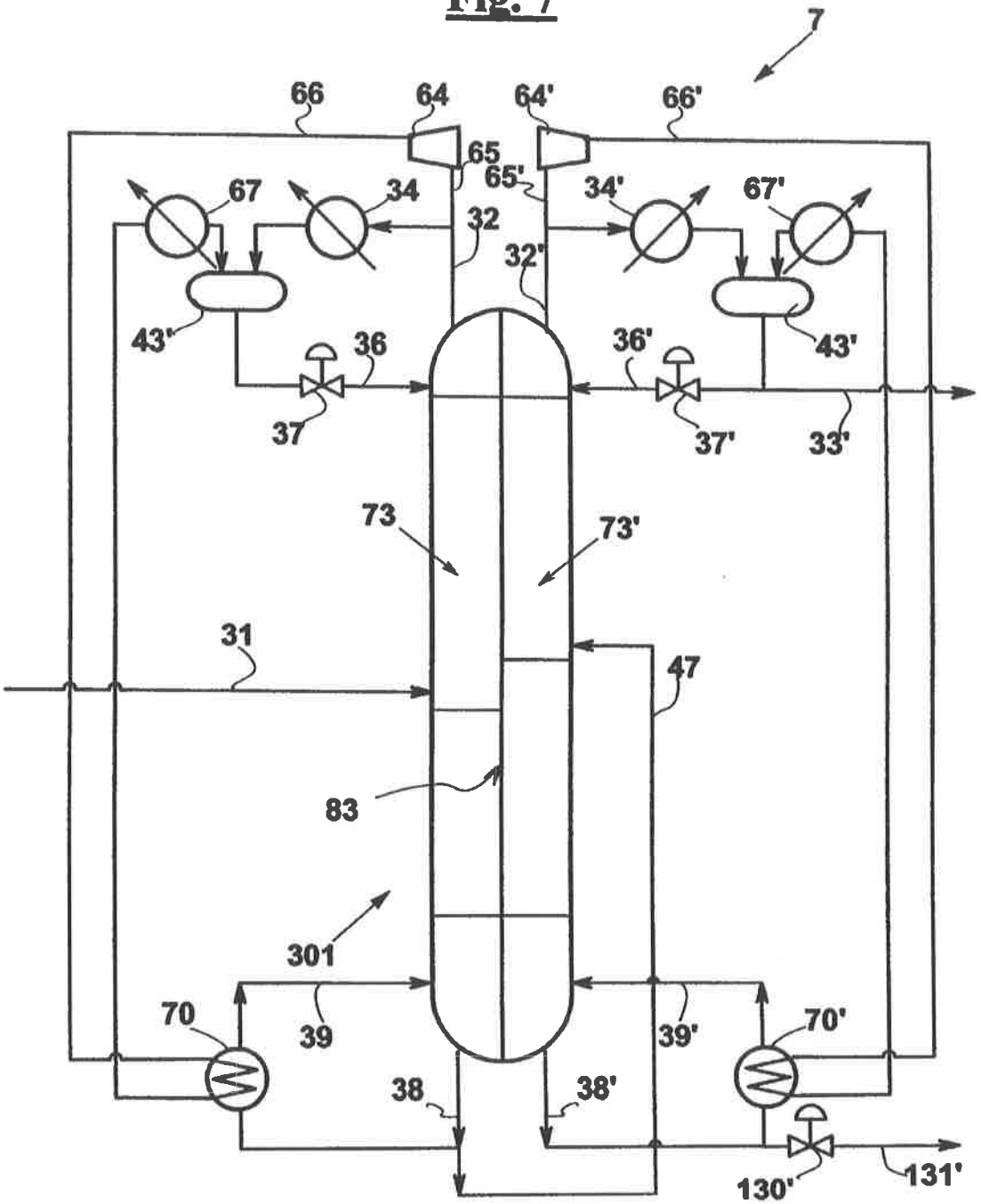
7
66
64
64'
66'
65
65'
67
34
34'
67'
32
32'
43'
36
36'
43'
37
37'
33'
73
73'
31
47
83
301
70
39
39'
70'
38
38'
130'
131'

Fig. 8

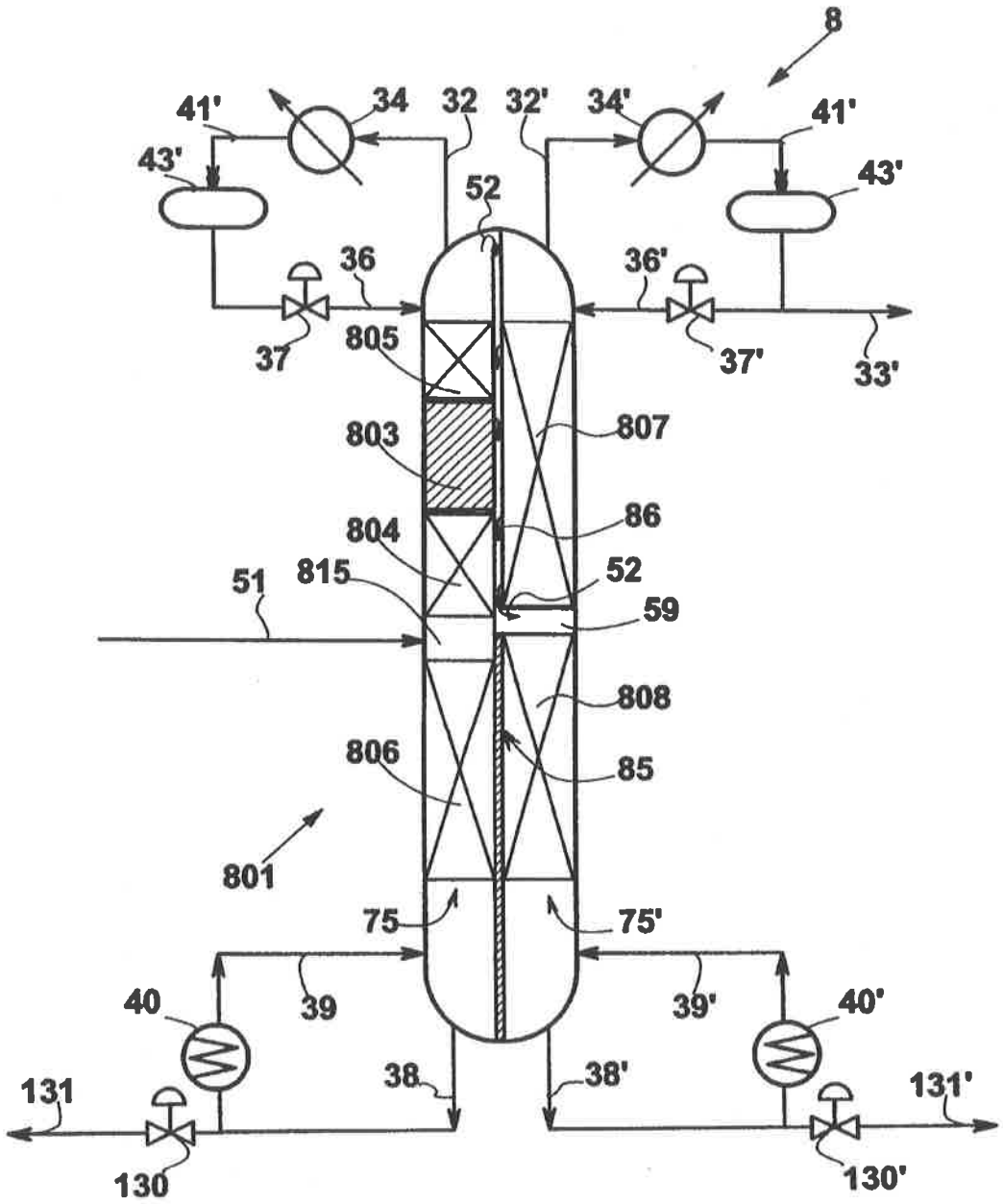
8
41'
34
32
32'
34'
41'
43'
43'
52
36
36'
37
805
37'
33'
803
807
804
86
815
52
51
59
808
806
85
801
75
75'
40
39
39'
40'
38
38'
131
131'
130
130'

Fig. 9

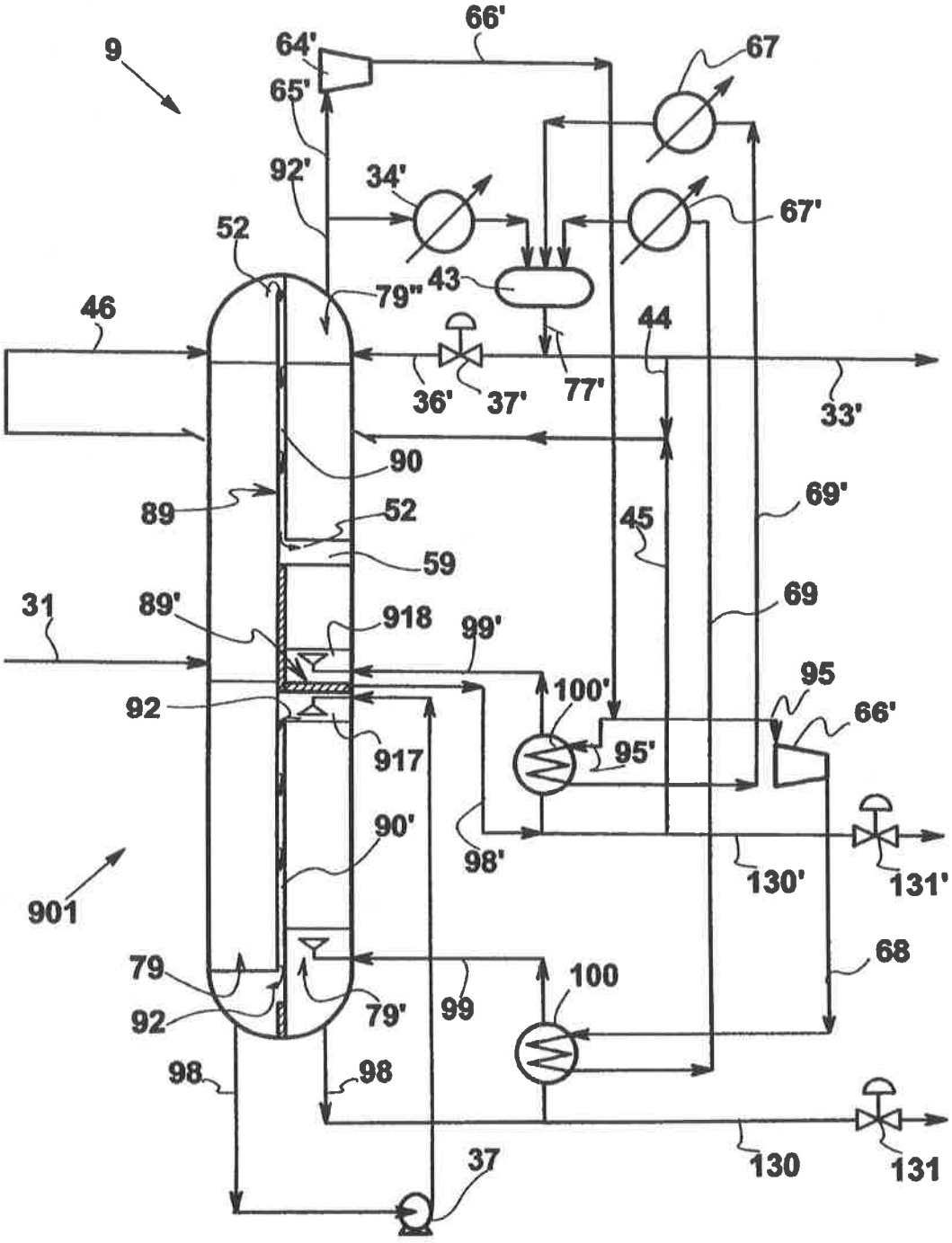
9
64'
65'
66'
67
92'
34'
67'
52
43
79"
46
44
36'
37'
77'
33'
90
89
52
45
69'
59
31
89'
918
99'
69
100'
95
92
66'
917
95'
90'
98'
130'
131'
901
68
79
100
92
79'
99
98
98
130
131
37

Fig. 10

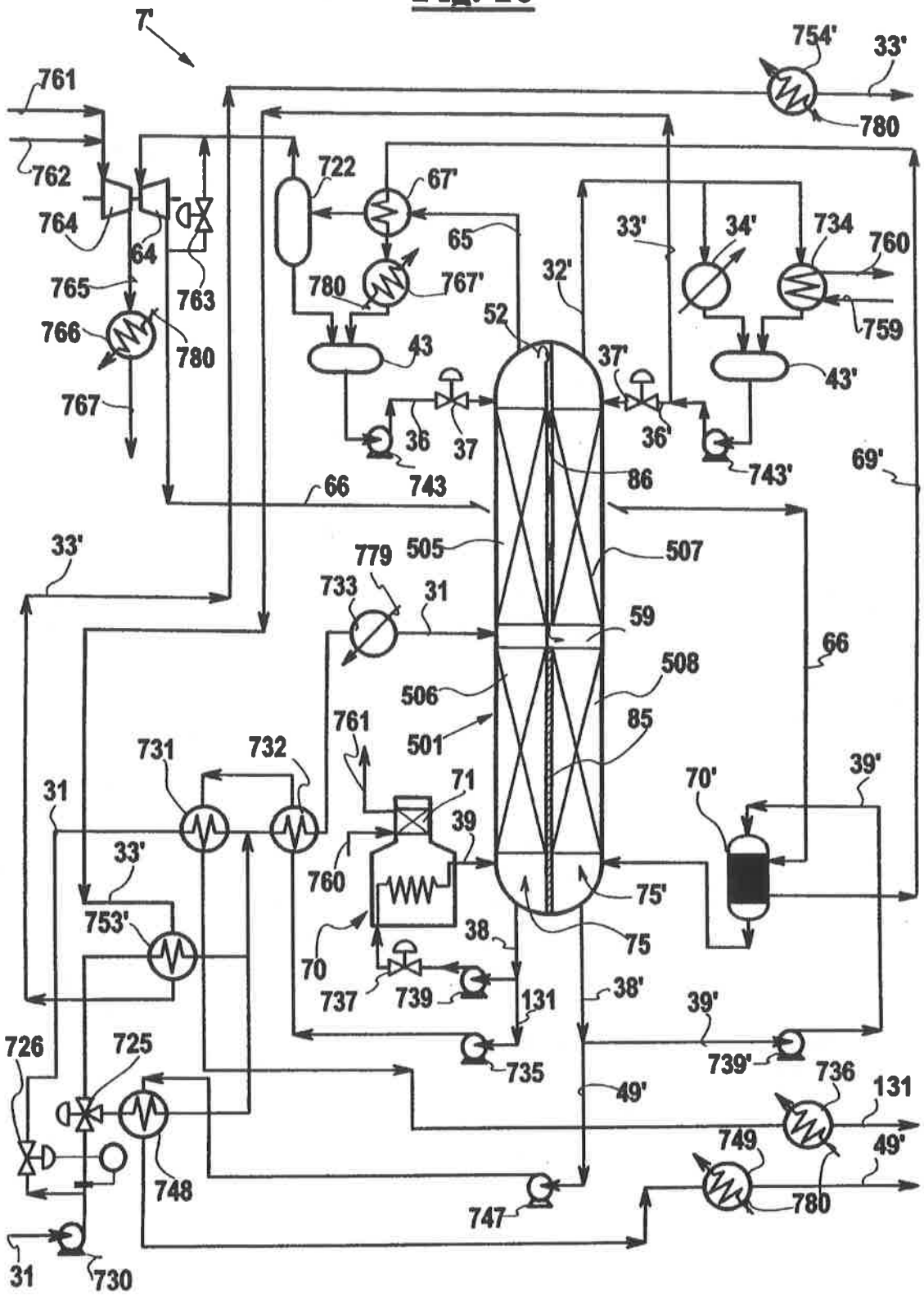
7'
761
762
764
64
765
763
766
780
767
722
67'
65
780
767'
43
36
37
743
66
32'
52
33'
34'
734
760
759
43'
37'
36'
743'
86
69'
754'
33'
780
33'
779
505
507
733
31
59
66
508
506
501
85
761
731
732
71
39
31
33'
760
75'
753'
70
38
75
737
739
131
38'
39'
726
725
735
739'
736
131
49'
749
49'
748
747
780
31
730
70'
39'

Fig. 11

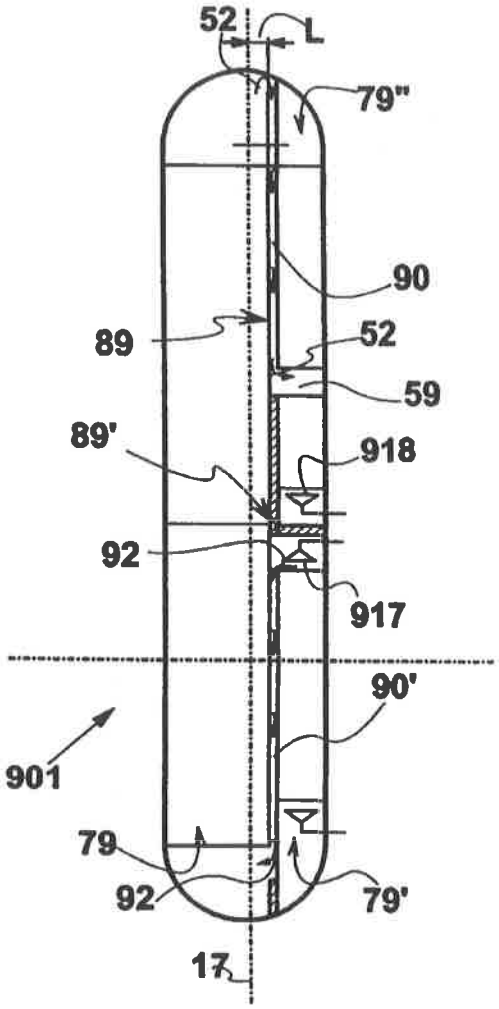

Fig. 12A

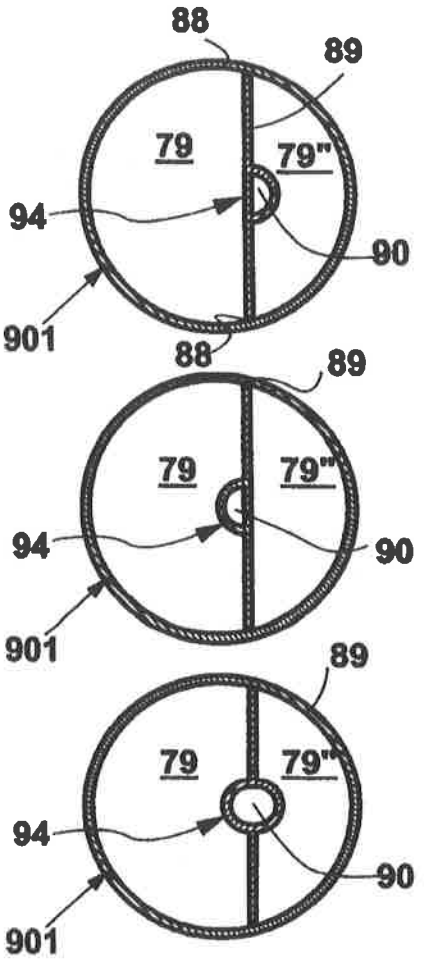

Fig. 12C

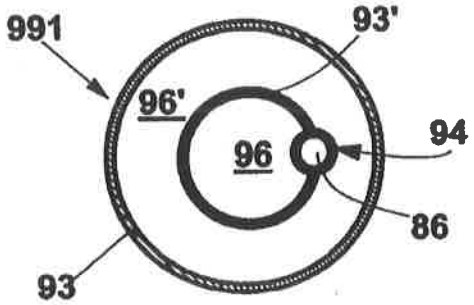

Fig. 12B

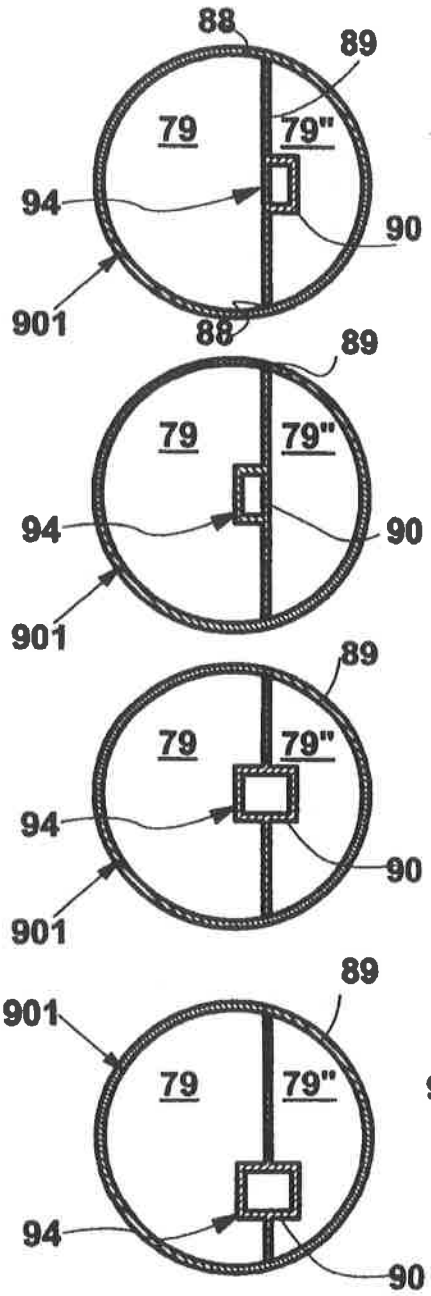

951

Fig. 13

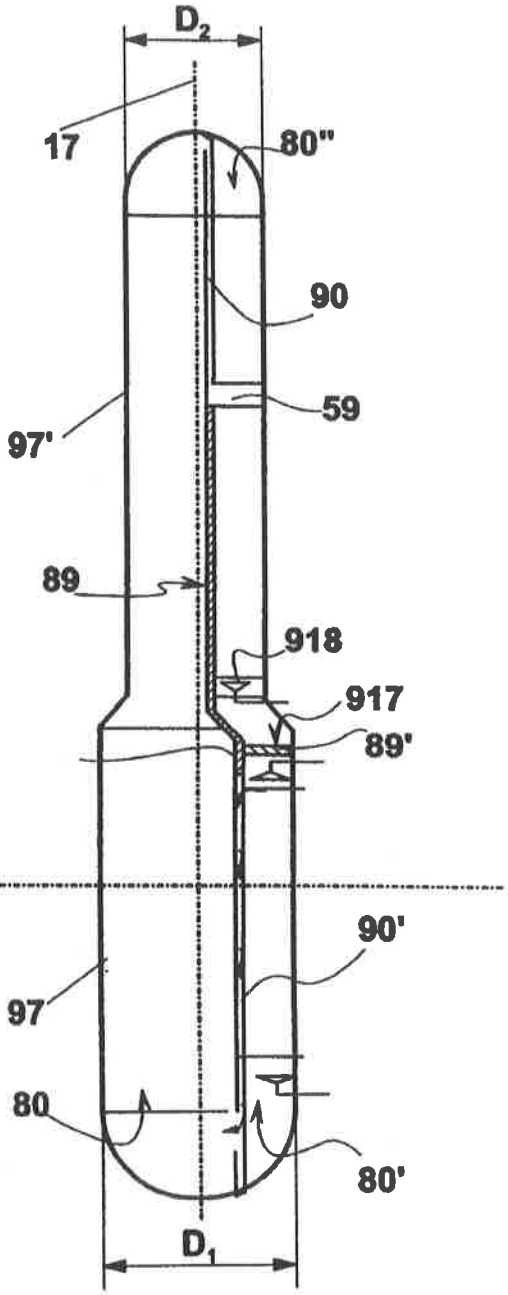

Fig. 14

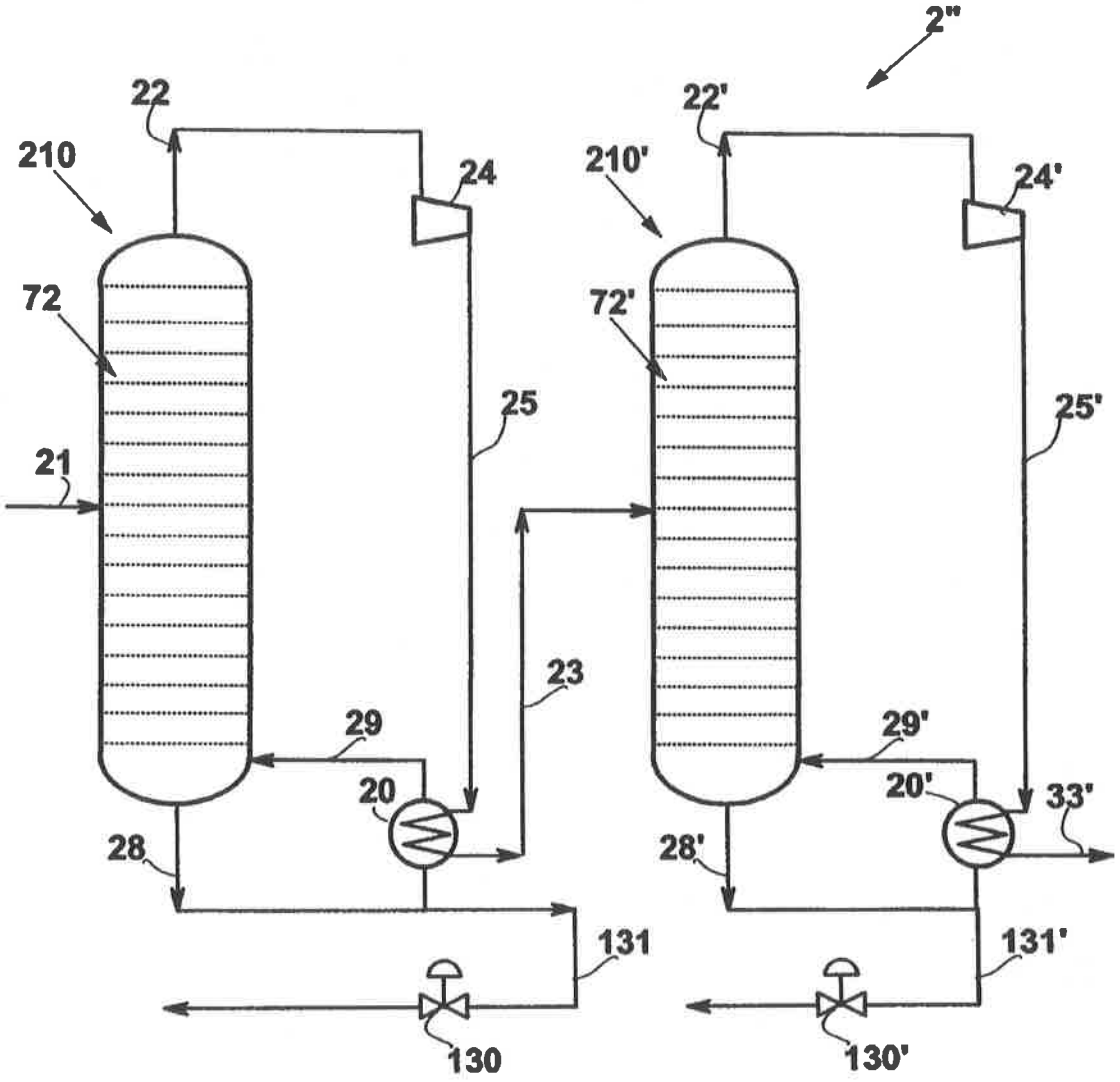
2"
22
22'
210
210'
24
24'
72
72'
25
25'
21
23
29
29'
20
20'
33'
28
28'
131
131'
130
130'

Fig. 15

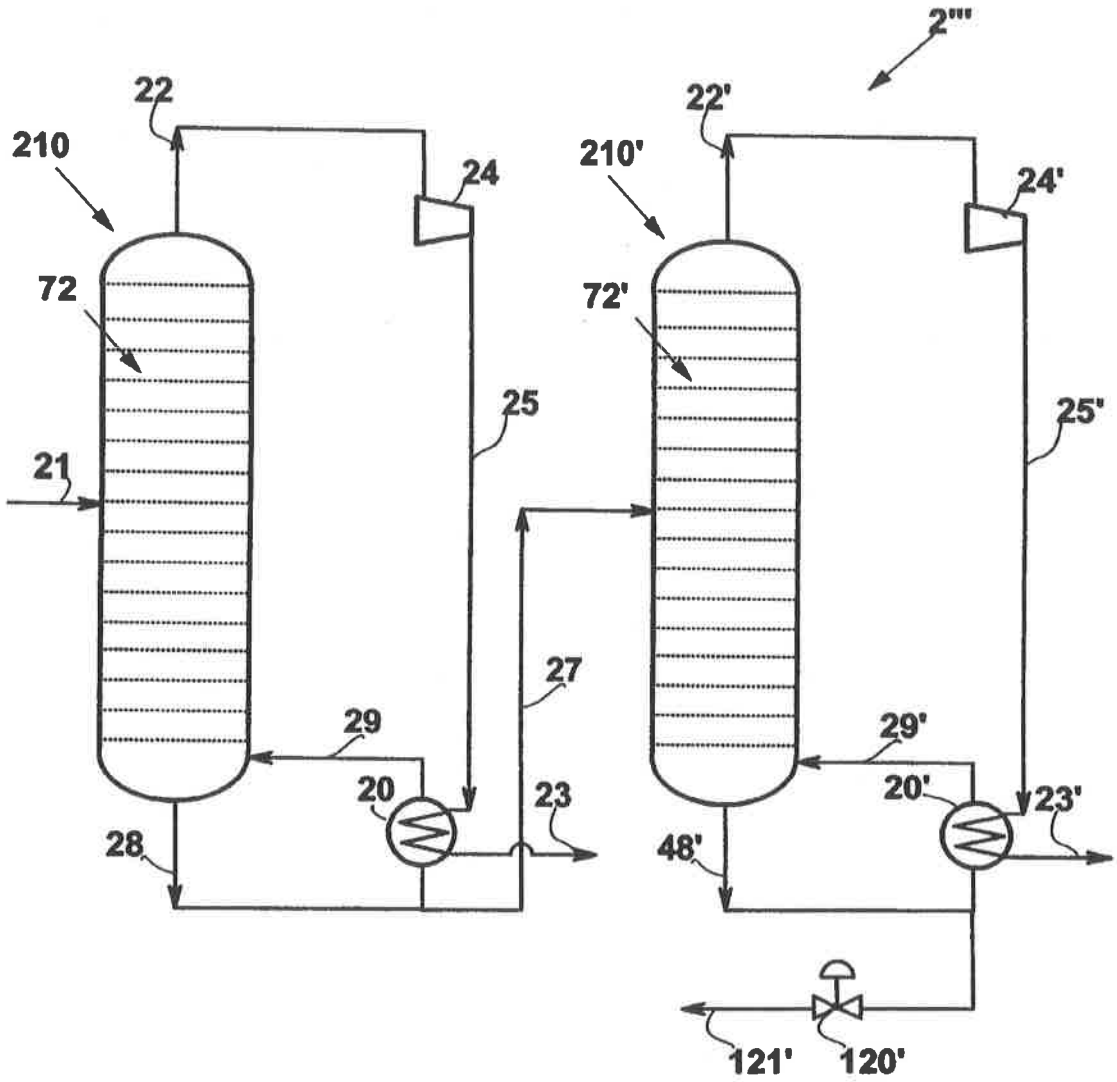

Fig. 16

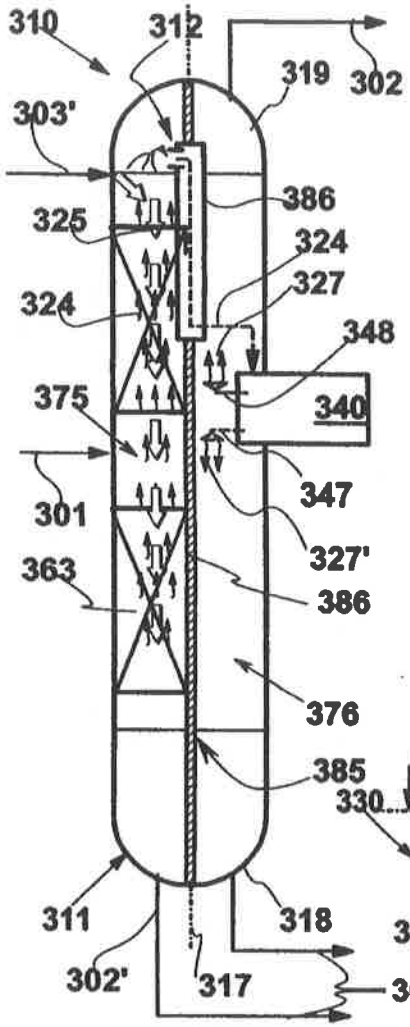

Fig. 18

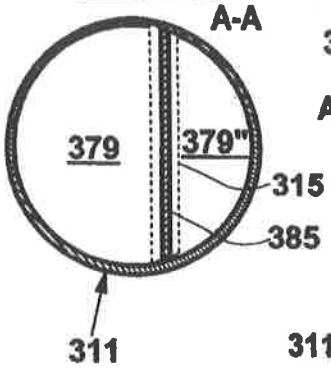

Fig. 17

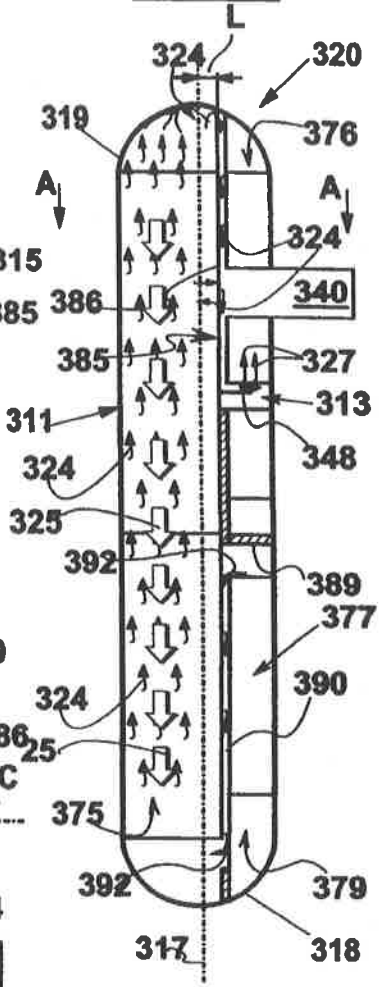

Fig. 19

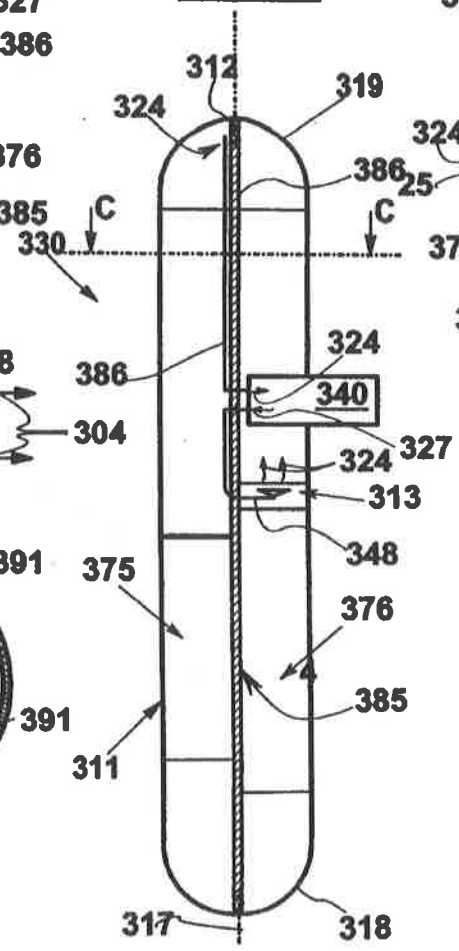

Fig. 20

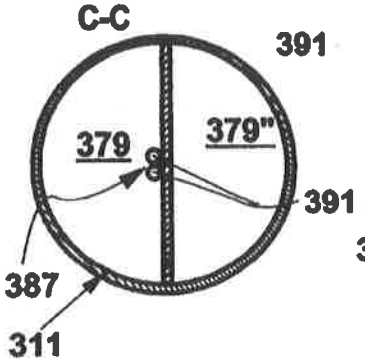

Fig. 21

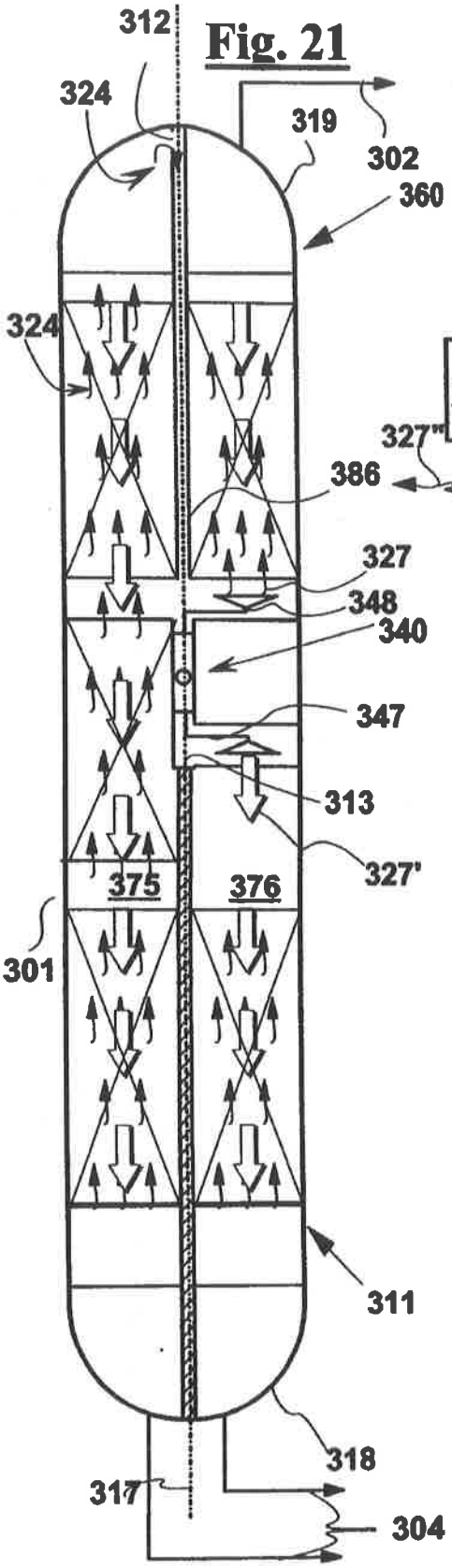

Fig. 22

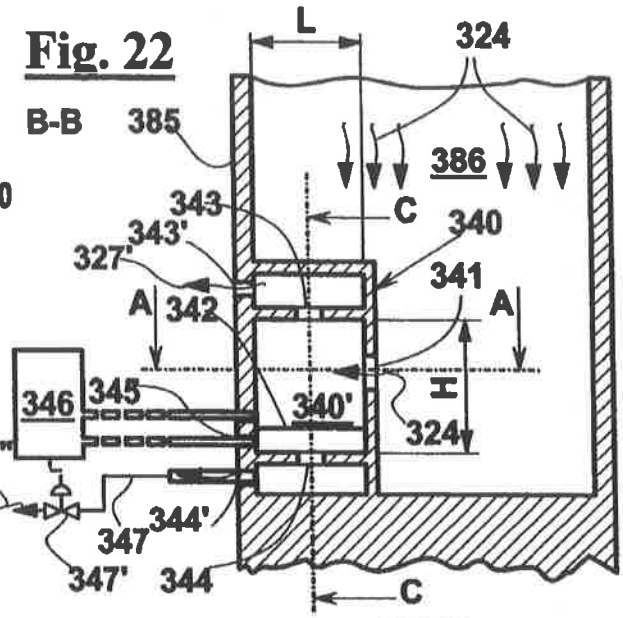

Fig. 23

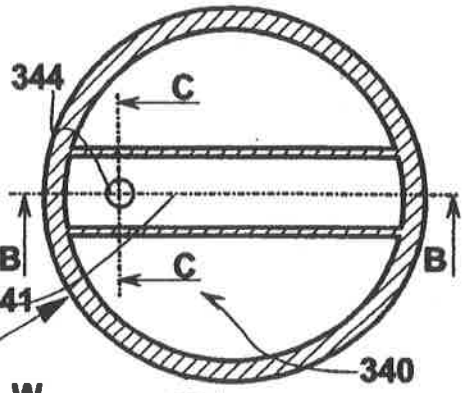

Fig. 24

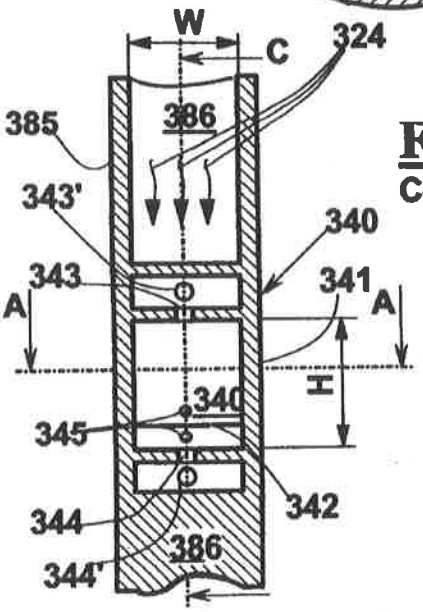

C

Fig. 25

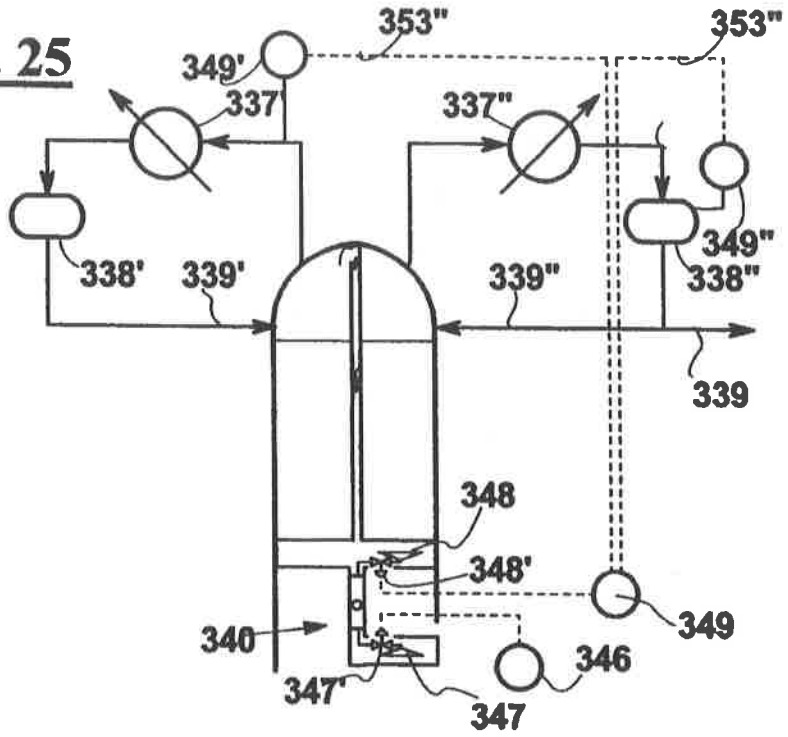

Fig. 26

B-B

