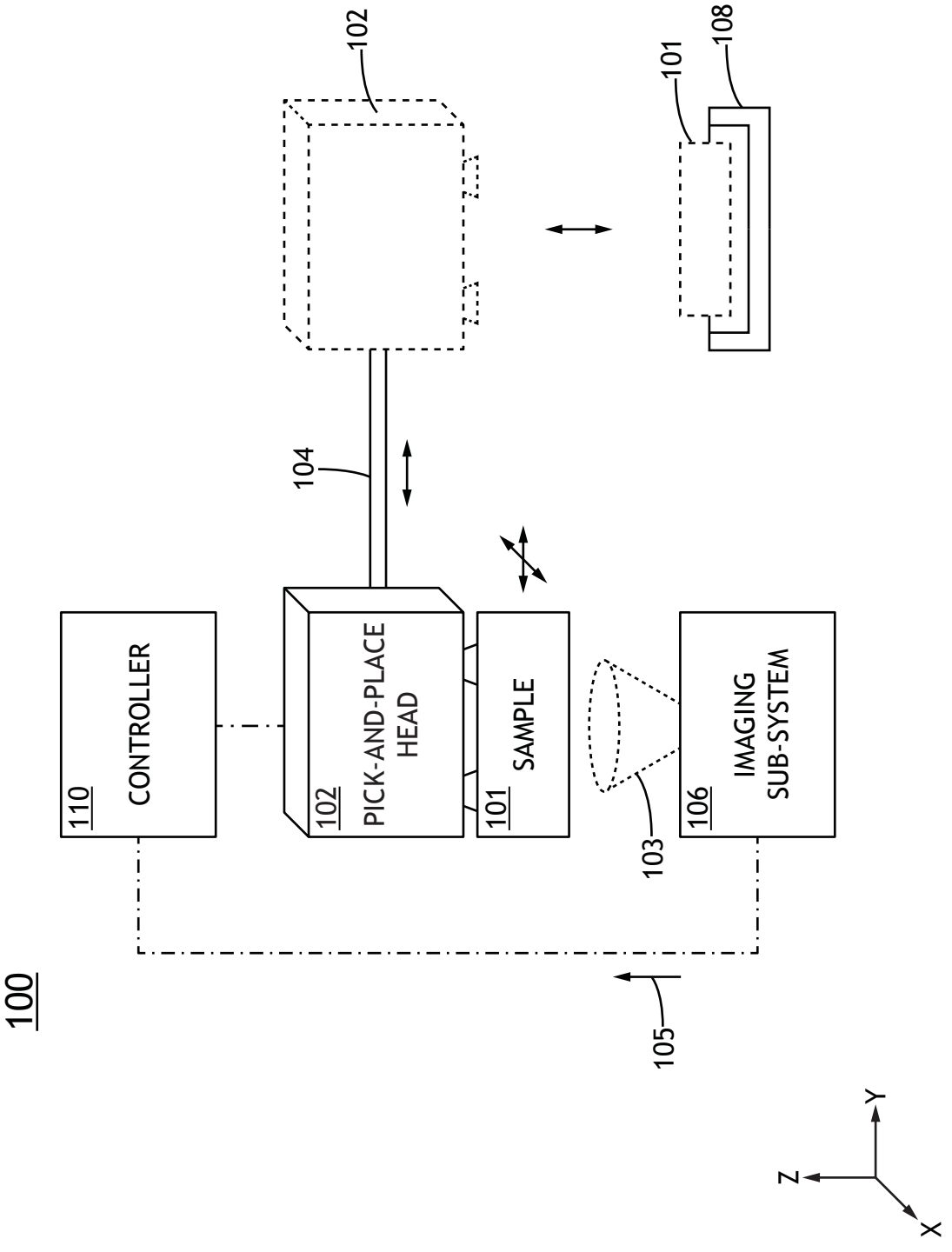
100
110
CONTROLLER
102
PICK-AND-PLACE HEAD
101
SAMPLE
106
IMAGING SUB-SYSTEM
102
101
108
104
103
105
Y
Z
X

FIG. 1

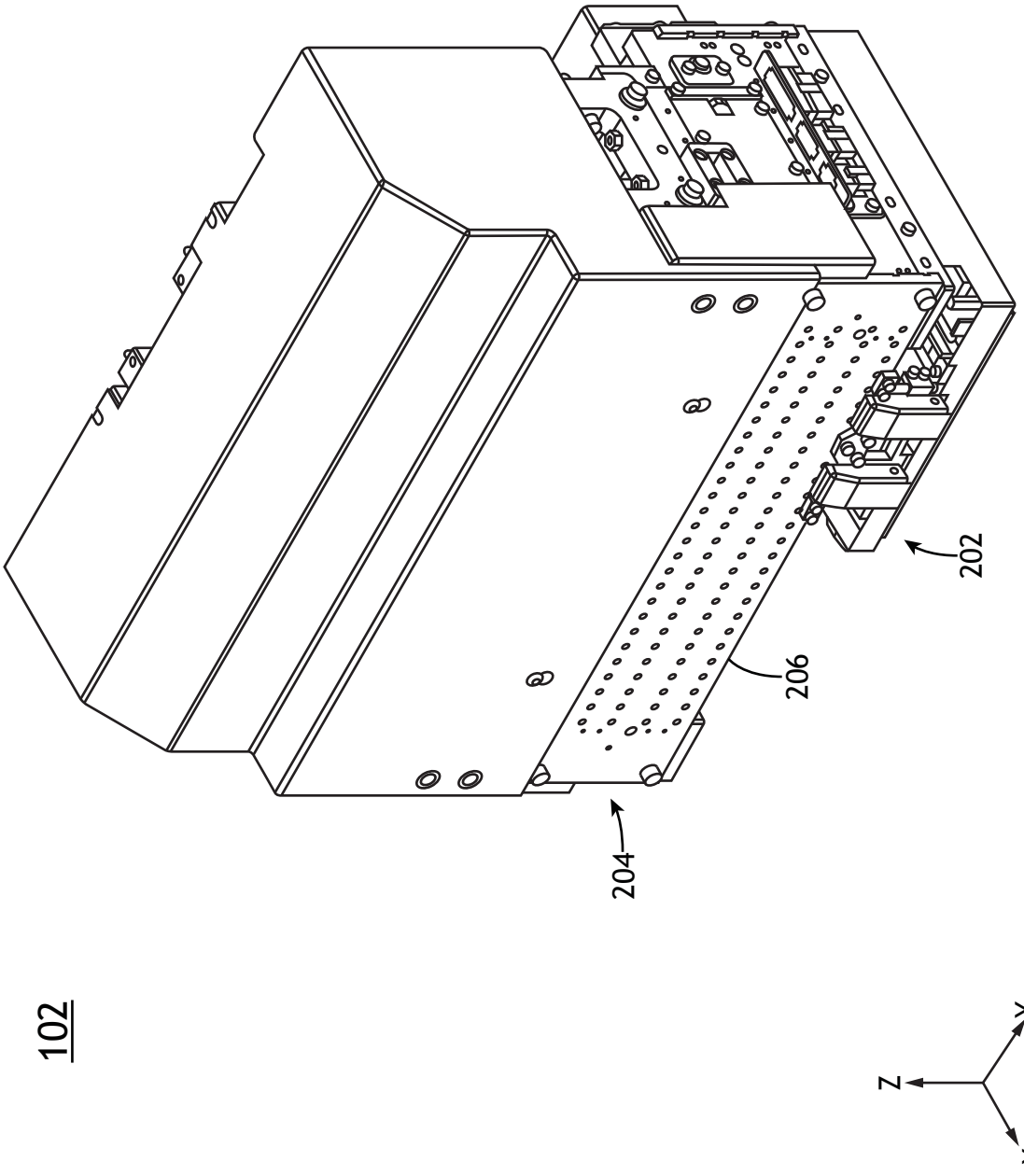

FIG.2A

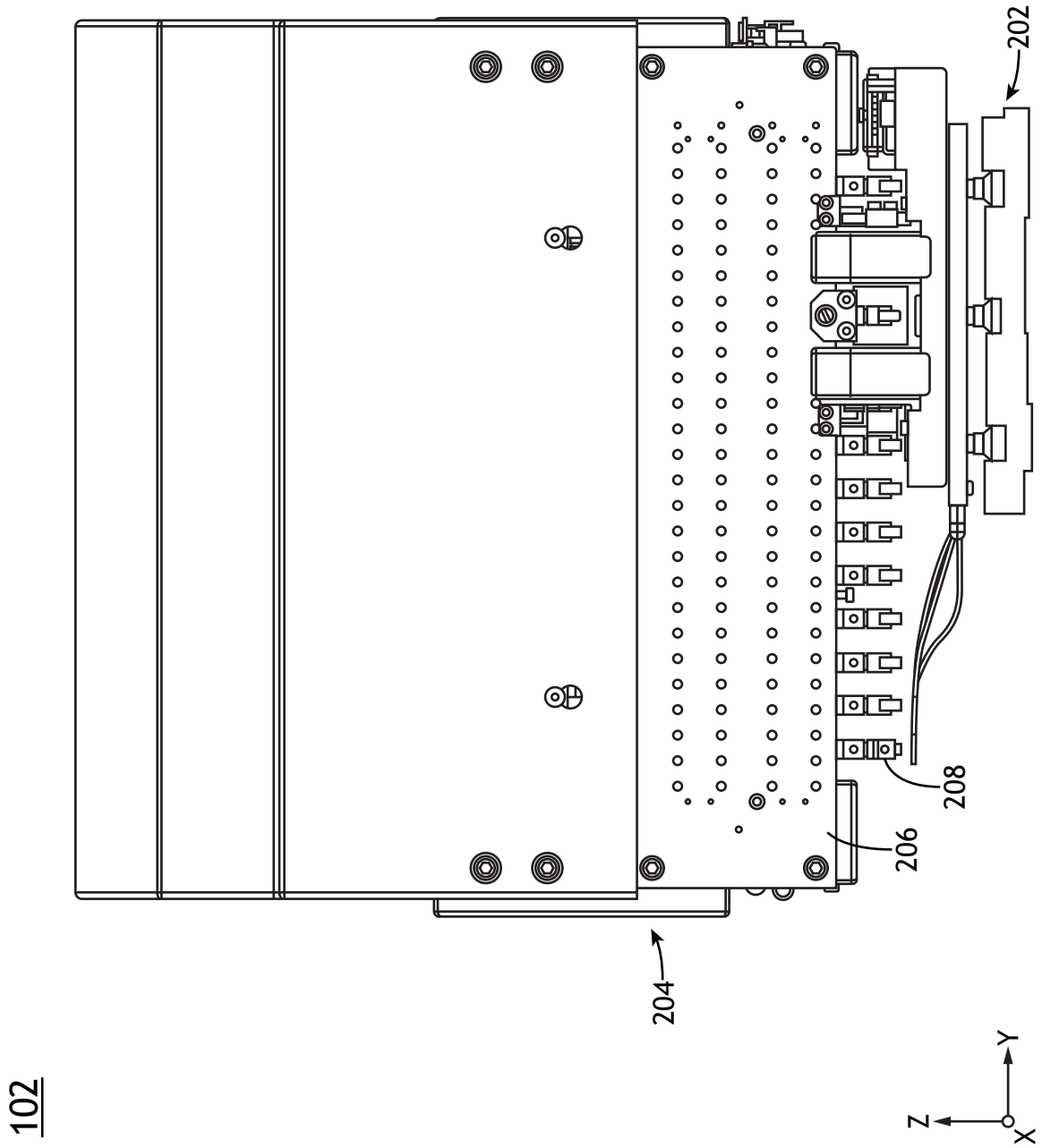

FIG.2B

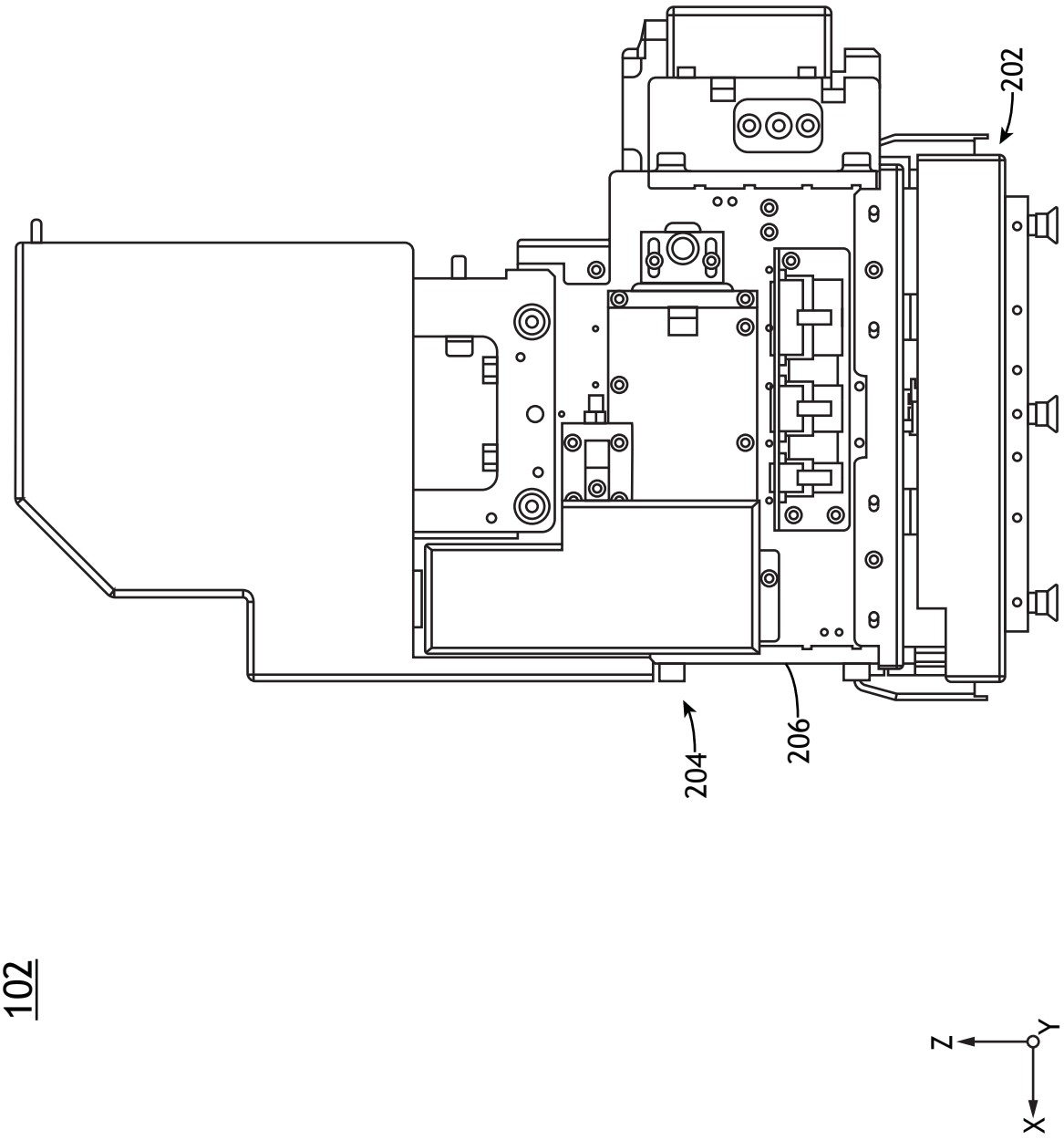

FIG.2C

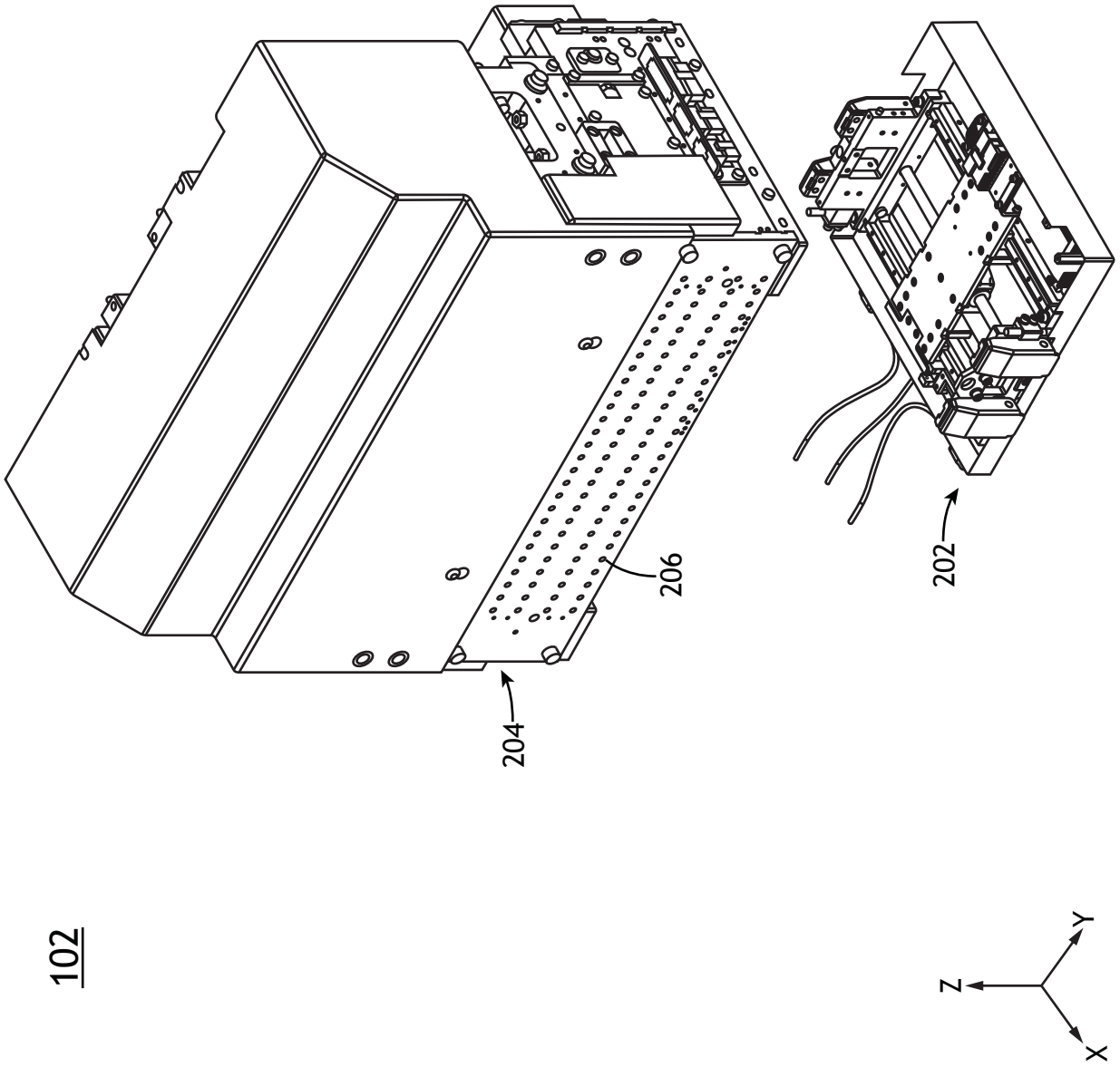

FIG.2D

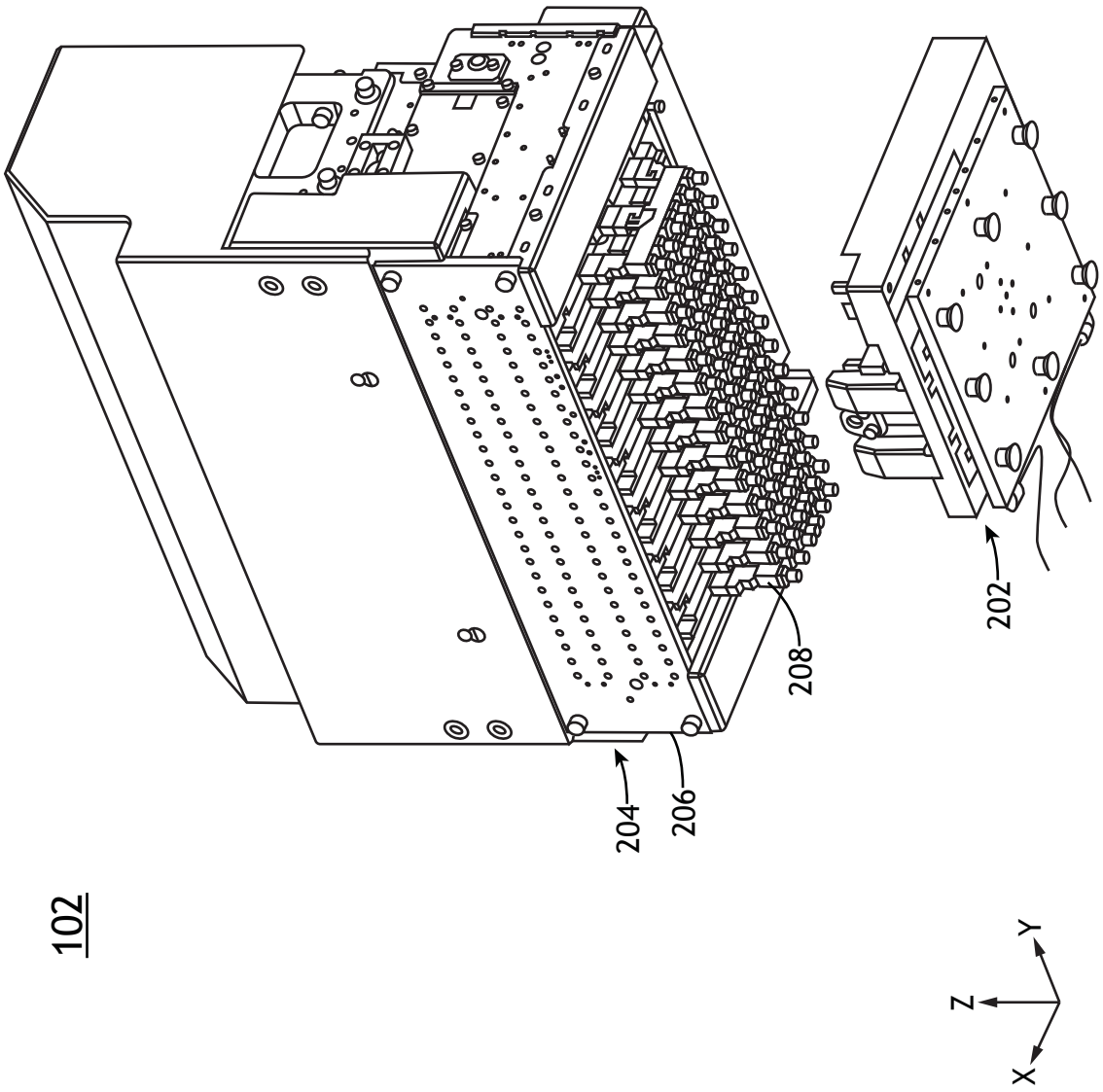

FIG.2E

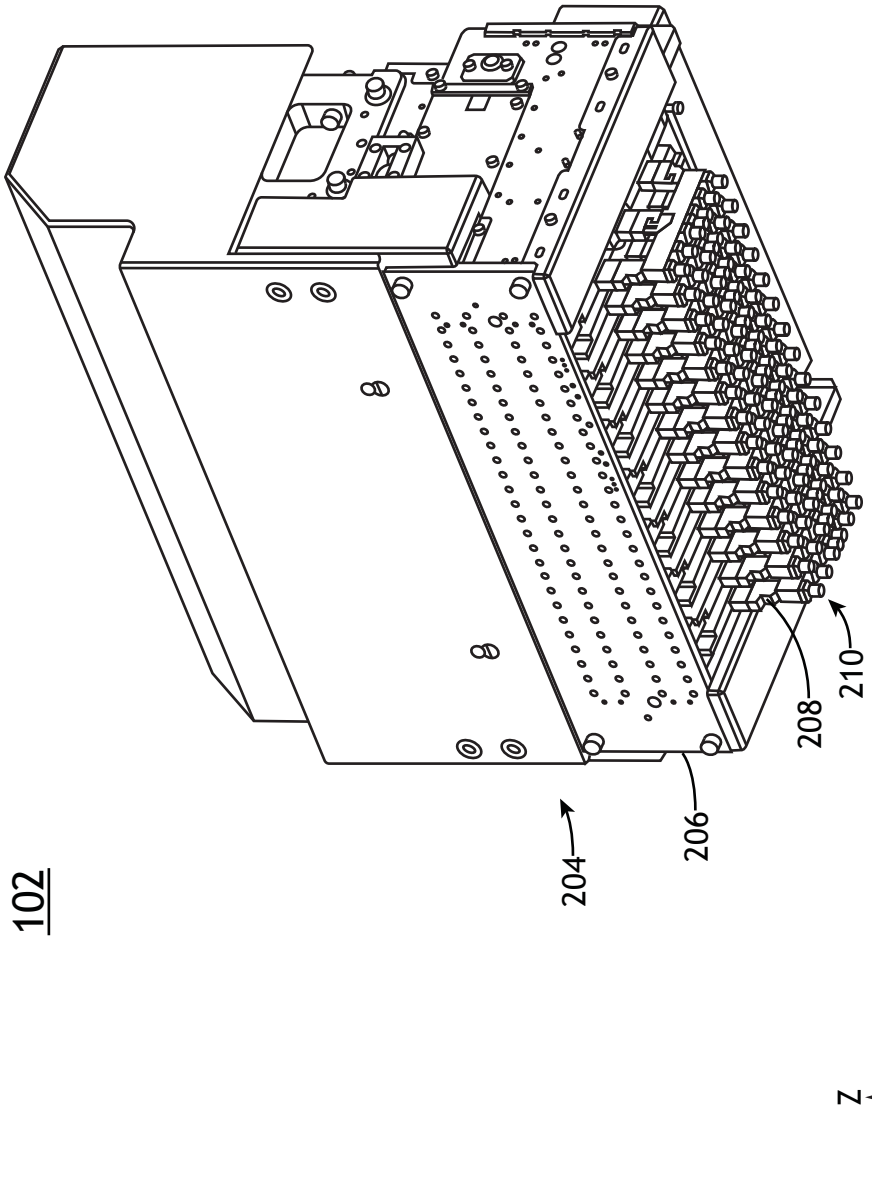

FIG.2F

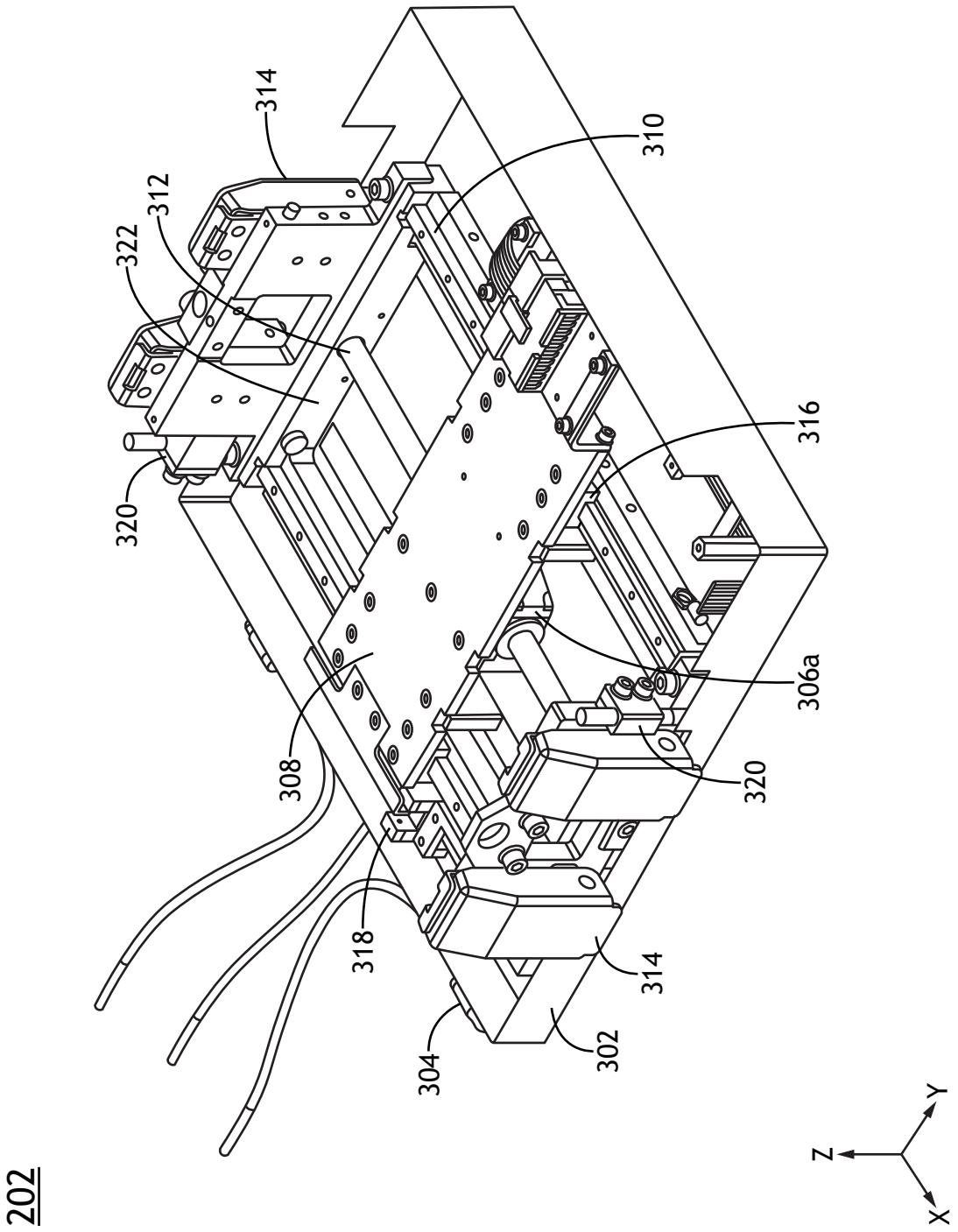

FIG. 3A

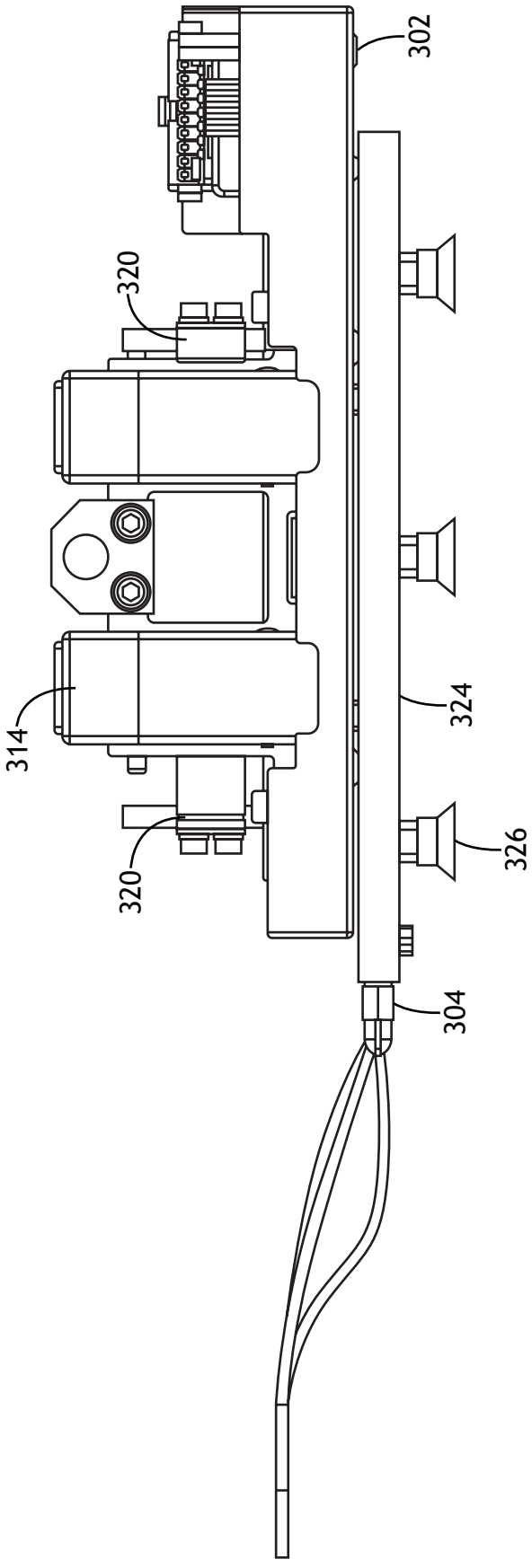

FIG.3B

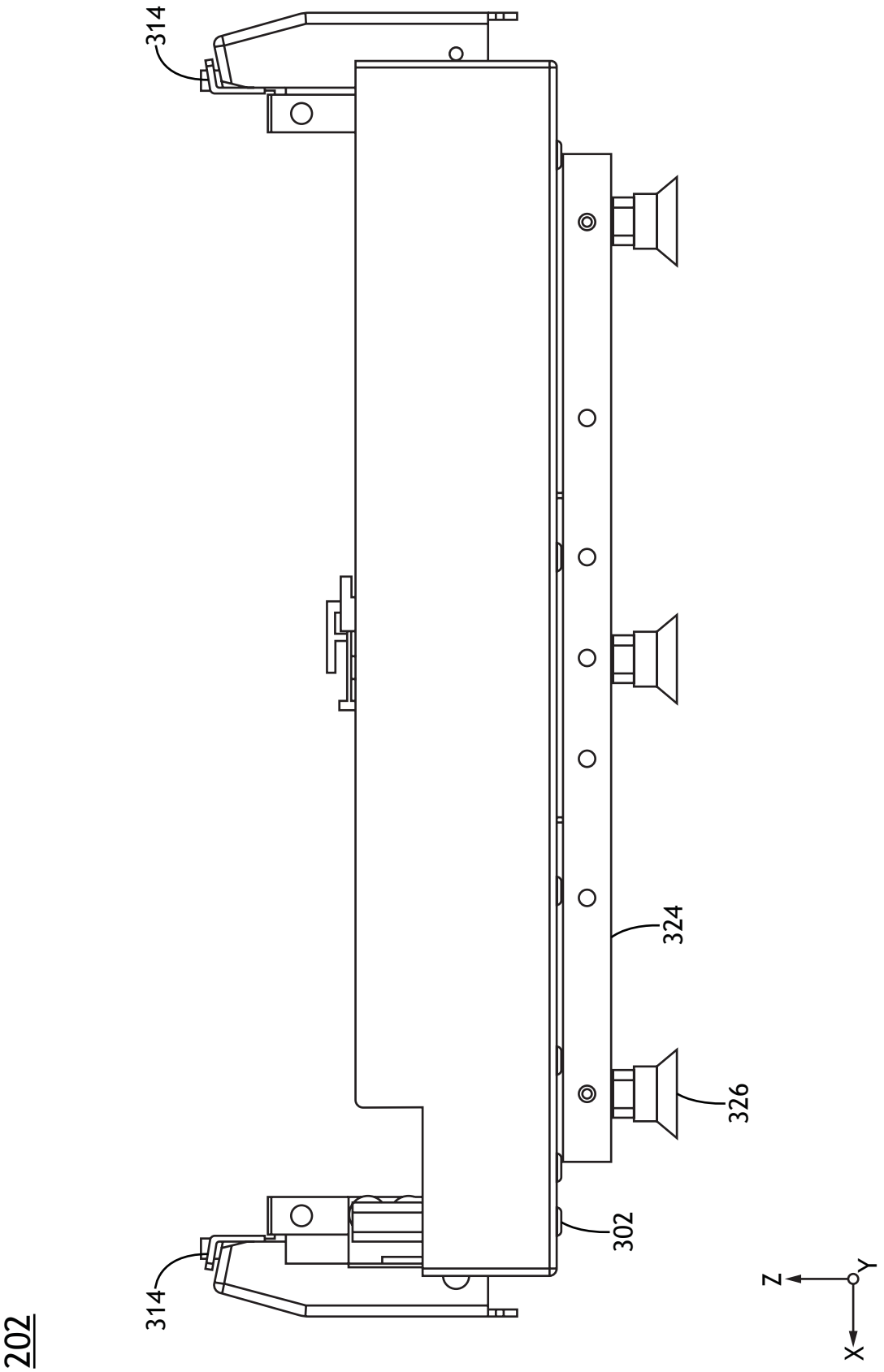

FIG.3C

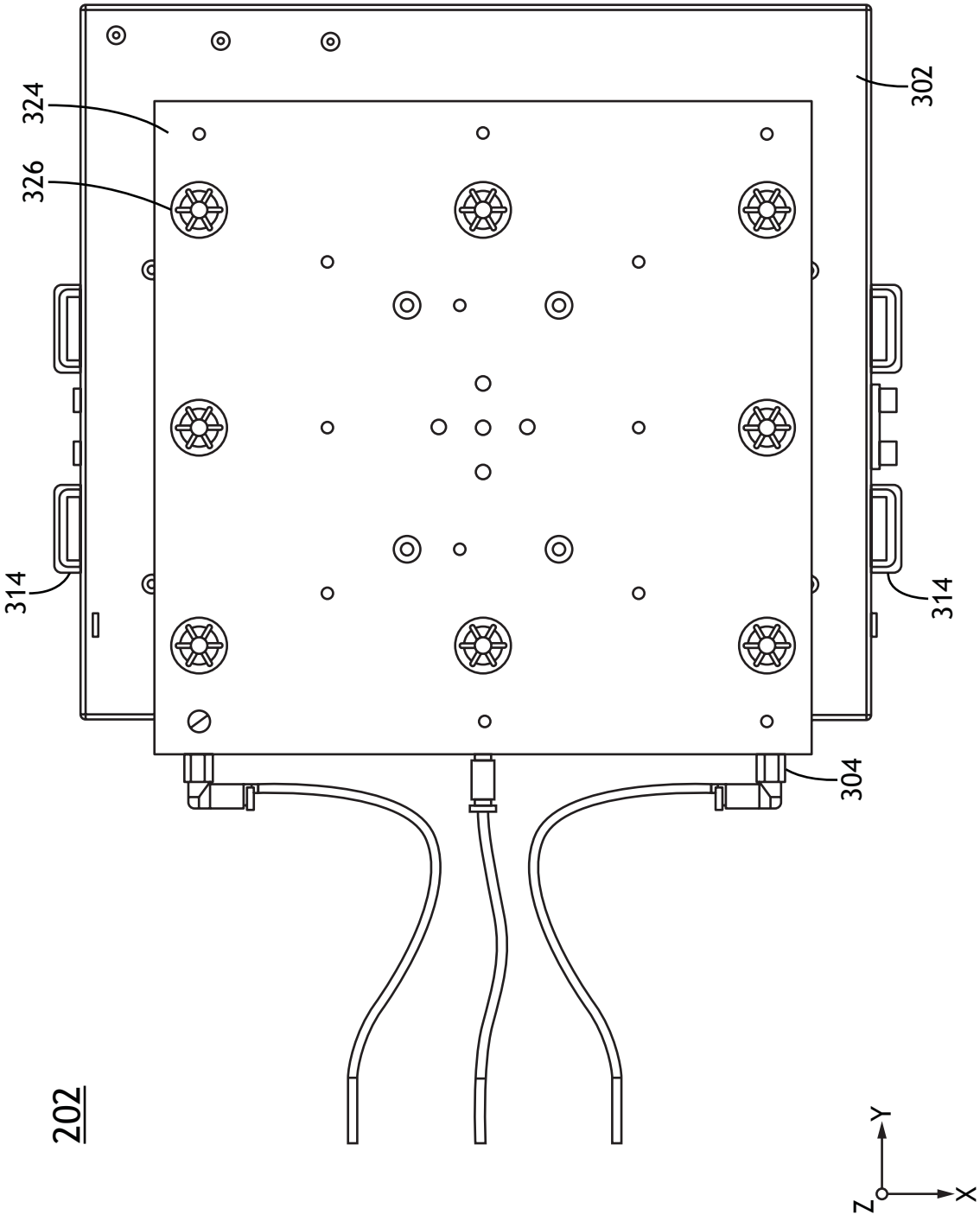

FIG.3D

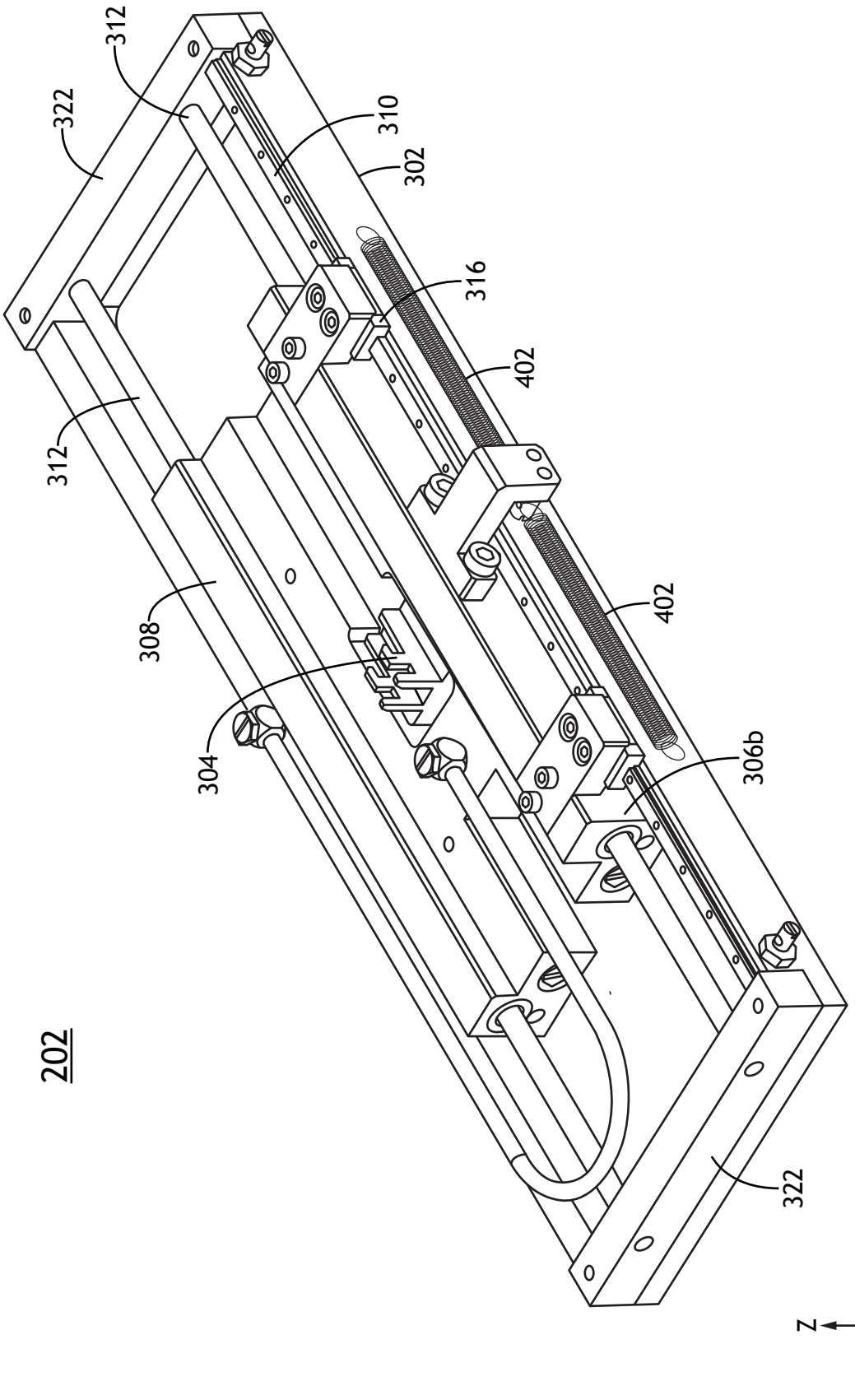

FIG. 4A

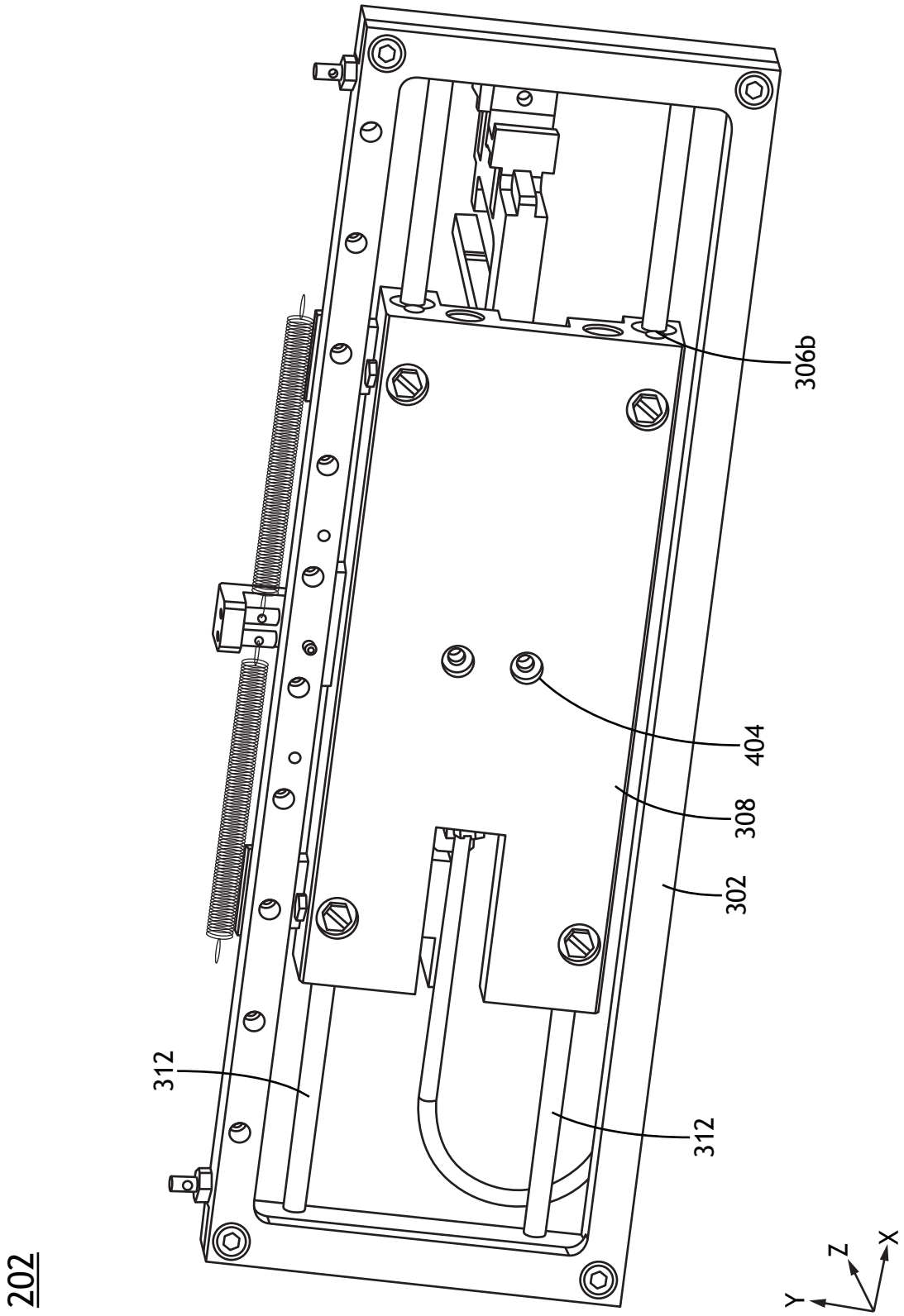

FIG.4B

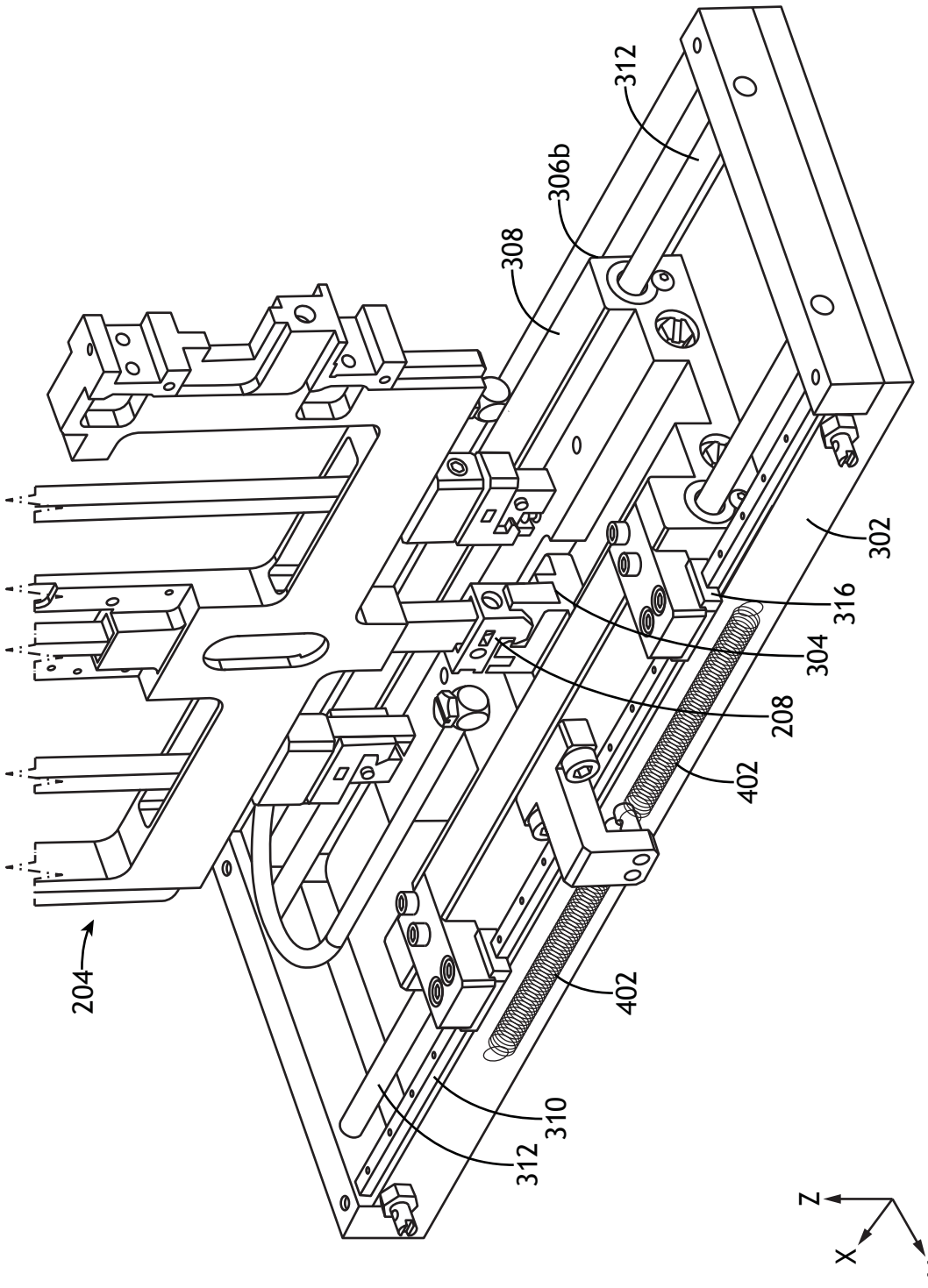

FIG.4C

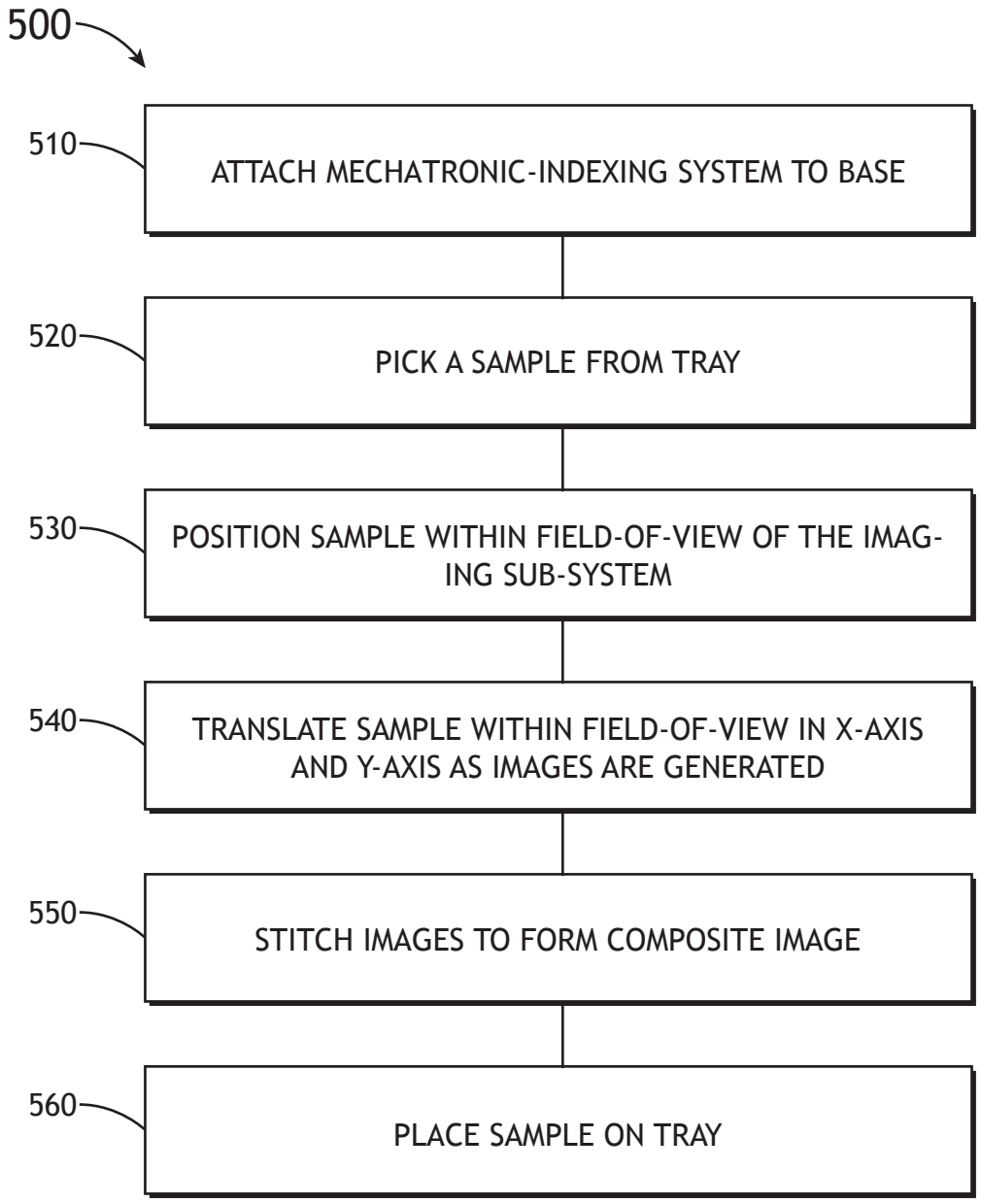
500
510
ATTACH MECHATRONIC-INDEXING SYSTEM TO BASE
520
PICK A SAMPLE FROM TRAY
530
POSITION SAMPLE WITHIN FIELD-OF-VIEW OF THE IMAGING SUB-SYSTEM
540
TRANSLATE SAMPLE WITHIN FIELD-OF-VIEW IN X-AXIS AND Y-AXIS AS IMAGES ARE GENERATED
550
STITCH IMAGES TO FORM COMPOSITE IMAGE
560
PLACE SAMPLE ON TRAY

FIG.5