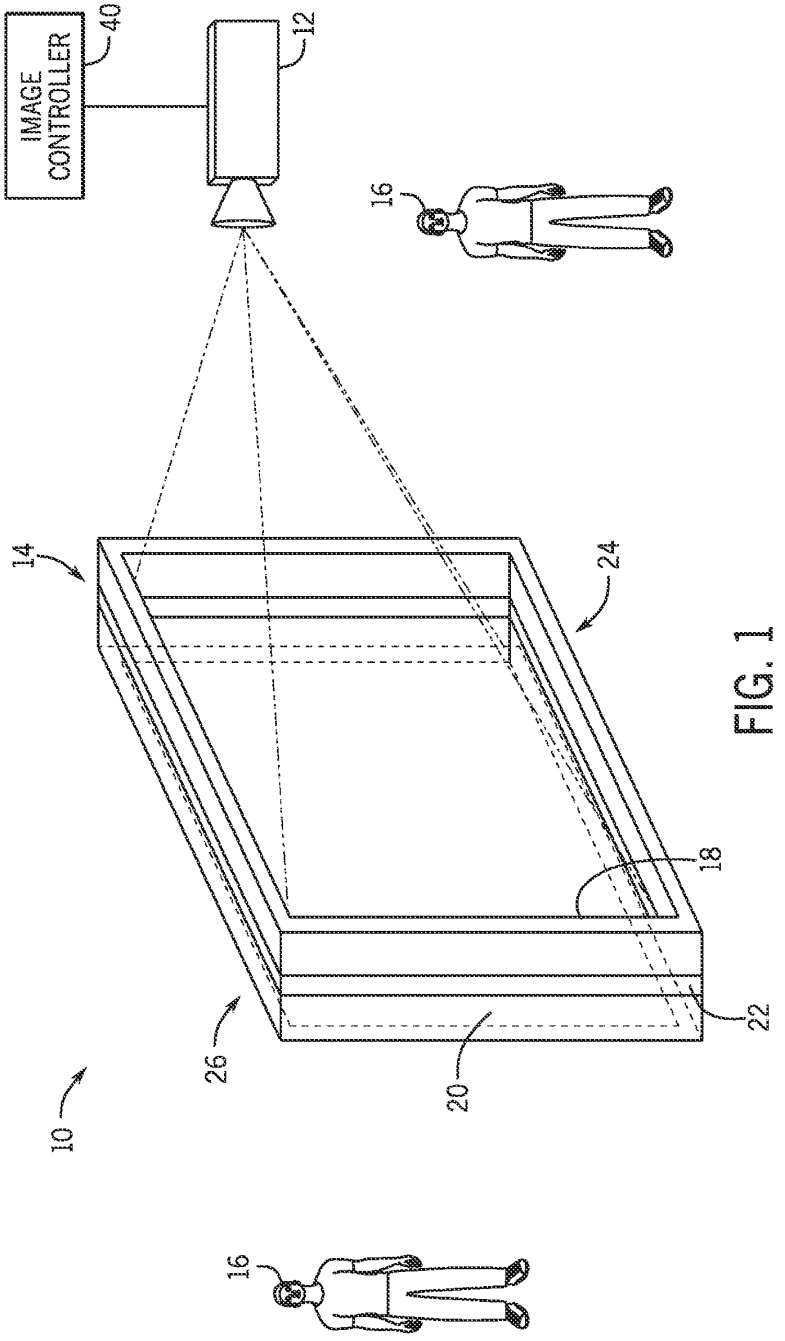

FIG. 1

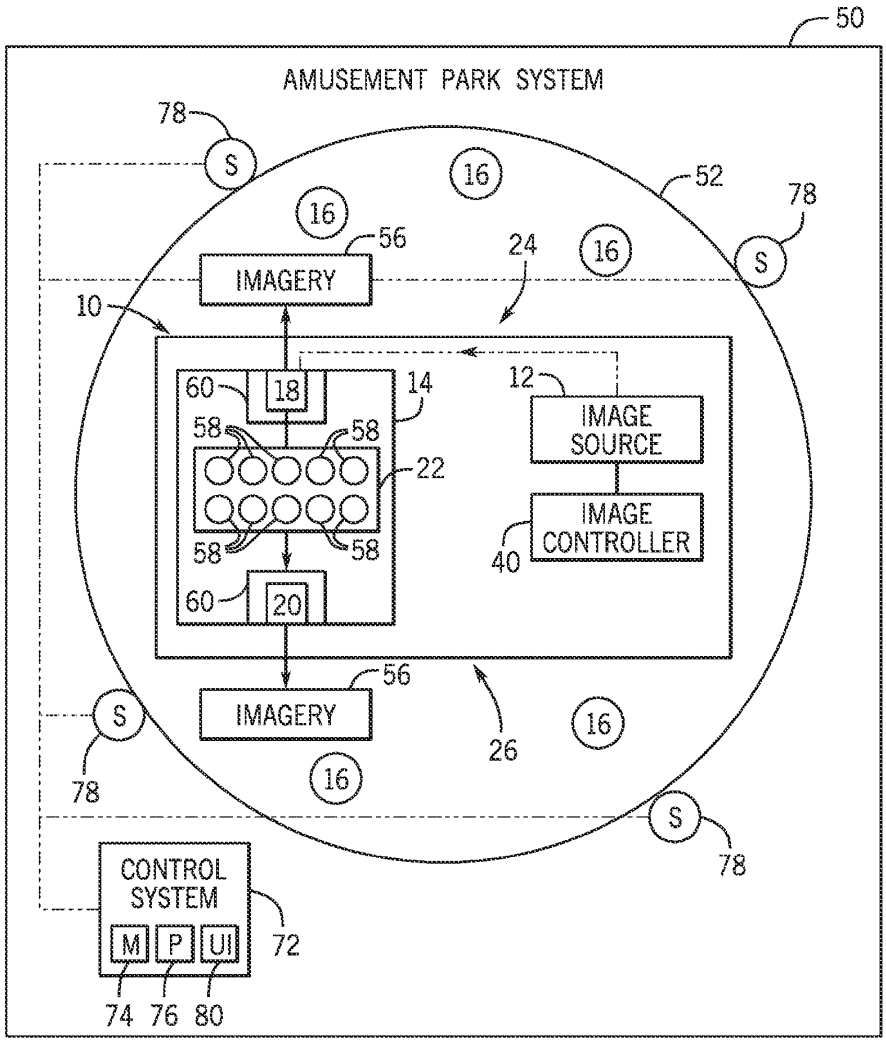
50
AMUSEMENT PARK SYSTEM
78
S
16
52
78
16
56
IMAGERY
24
16
S
10
60
18
14
12
IMAGE SOURCE
58
58
22
IMAGE CONTROLLER
40
58
58
60
20
56
IMAGERY
S
26
16
78
16
S
78
CONTROL SYSTEM
M
P
UI
72
74
76
80

FIG. 2

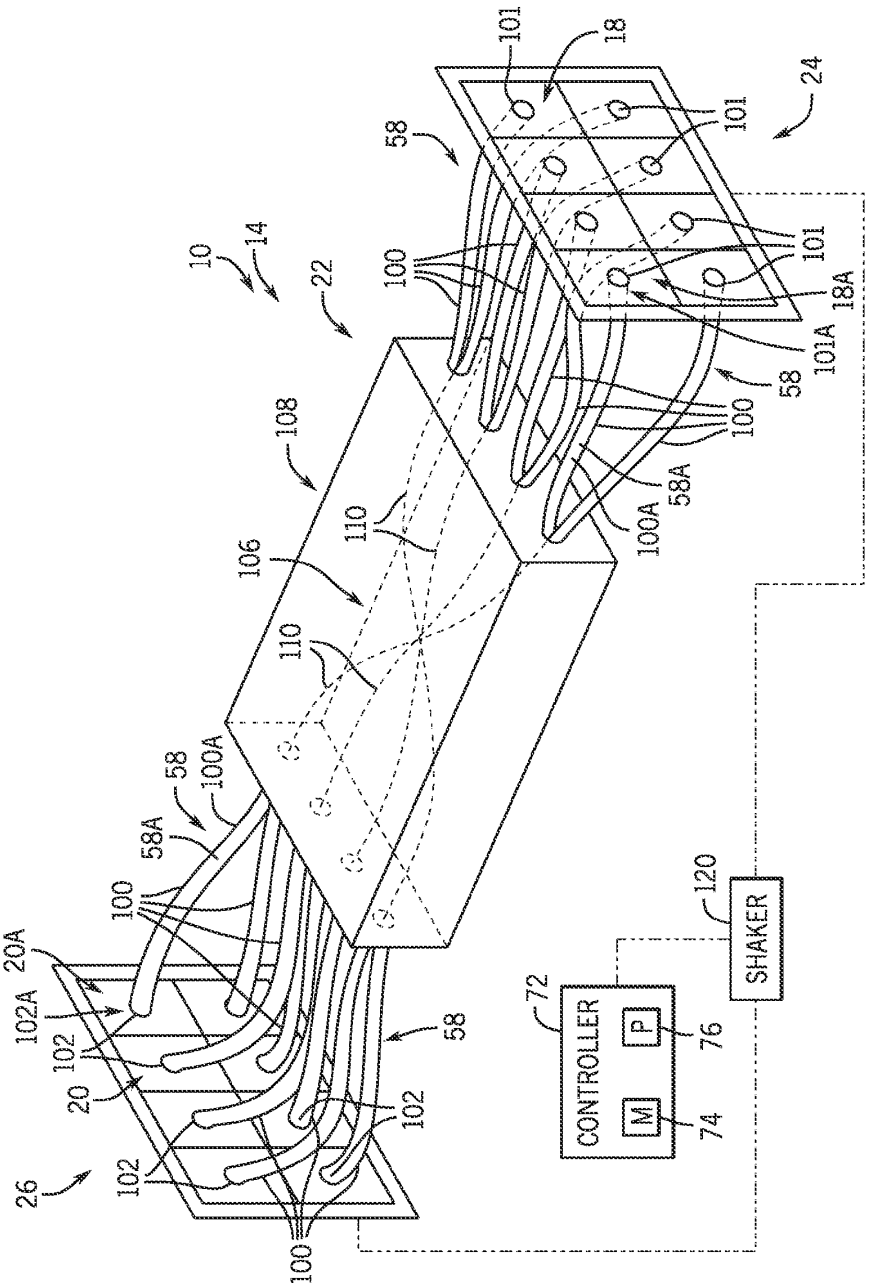
10
14
22
24
26
18
18A
20
20A
58
58A
72
74
76
100
100A
101
101A
102
102A
106
108
110
120
CONTROLLER
M
P
SHAKER

FIG. 3

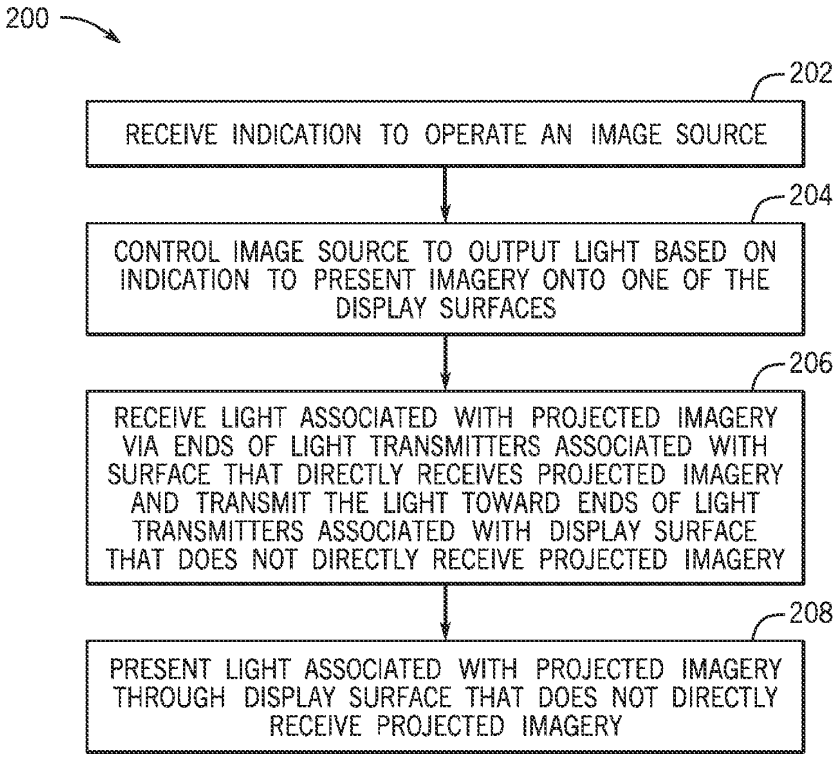
200
202
RECEIVE INDICATION TO OPERATE AN IMAGE SOURCE
204
CONTROL IMAGE SOURCE TO OUTPUT LIGHT BASED ON INDICATION TO PRESENT IMAGERY ONTO ONE OF THE DISPLAY SURFACES
206
RECEIVE LIGHT ASSOCIATED WITH PROJECTED IMAGERY VIA ENDS OF LIGHT TRANSMITTERS ASSOCIATED WITH SURFACE THAT DIRECTLY RECEIVES PROJECTED IMAGERY AND TRANSMIT THE LIGHT TOWARD ENDS OF LIGHT TRANSMITTERS ASSOCIATED WITH DISPLAY SURFACE THAT DOES NOT DIRECTLY RECEIVE PROJECTED IMAGERY
208
PRESENT LIGHT ASSOCIATED WITH PROJECTED IMAGERY THROUGH DISPLAY SURFACE THAT DOES NOT DIRECTLY RECEIVE PROJECTED IMAGERY

FIG. 4