(12) INTERNATIONAL APPLICATION PUBLISHED UNDER THE PATENT COOPERATION TREATY (PCT)

(19) World Intellectual Property Organization
International Bureau

(43) International Publication Date
21 May 2004 (21.05.2004)

PCT

(10) International Publication Number
WO 2004/042367 A3

(51) International Patent Classification[7]: B01L 3/00, B81B 1/00, B81C 1/00

(21) International Application Number: PCT/US2003/034750

(22) International Filing Date: 30 October 2003 (30.10.2003)

(25) Filing Language: English

(26) Publication Language: English

(30) Priority Data:
10/286,314 31 October 2002 (31.10.2002) US

(71) Applicant: **HEWLETT-PACKARD DEVELOPMENT COMPANY, L.P.** [US/US]; 20555 S.H. 249, Houston, TX 77070 (US).

(72) Inventors: **CHILDERS, Winthrop D.**; 9855 Fox Valley Way, San Diego, CA 92127 (US). **CRIVELLLI, Paul**; 7824 Mission Bonita Drive, San Diego, CA 92120 (US). **TYVOLL, David**; 6451 Dowling Drive, La Jolla, CA 92037 (US). **FEINN, James A.**; 11366 Turtleback Ln, San Diego, CA 92127 (US). **SEXTON, Douglas A.**; 5612 Ladybird Lane, La Jolla, CA 92037 (US).

(74) Agents: **HAYMOND, W. Bradley** et al.; Hewlett-Packard Company, Intellectual Property Administration, P.O. Box 272400, Mail Stop 35, Fort Collins, CO 80527-2400 (US).

(81) Designated States *(national)*: AE, AG, AL, AM, AT, AU, AZ, BA, BB, BG, BR, BY, BZ, CA, CH, CN, CO, CR, CU, CZ, DE, DK, DM, DZ, EC, EE, EG, ES, FI, GB, GD, GE, GH, GM, HR, HU, ID, IL, IN, IS, JP, KE, KG, KP, KR, KZ, LC, LK, LR, LS, LT, LU, LV, MA, MD, MG, MK, MN, MW, MX, MZ, NI, NO, NZ, OM, PG, PH, PL, PT, RO, RU, SC, SD, SE, SG, SK, SL, SY, TJ, TM, TN, TR, TT, TZ, UA, UG, UZ, VC, VN, YU, ZA, ZM, ZW.

(84) Designated States *(regional)*: ARIPO patent (GH, GM, KE, LS, MW, MZ, SD, SL, SZ, TZ, UG, ZM, ZW), Eurasian patent (AM, AZ, BY, KG, KZ, MD, RU, TJ, TM), European patent (AT, BE, BG, CH, CY, CZ, DE, DK, EE, ES, FI, FR, GB, GR, HU, IE, IT, LU, MC, NL, PT, RO, SE, SI, SK, TR), OAPI patent (BF, BJ, CF, CG, CI, CM, GA, GN, GQ, GW, ML, MR, NE, SN, TD, TG).

Published:
— *with international search report*

(88) Date of publication of the international search report:
29 July 2004

For two-letter codes and other abbreviations, refer to the "Guidance Notes on Codes and Abbreviations" appearing at the beginning of each regular issue of the PCT Gazette.

(54) Title: MICROFLUIDIC SYSTEM UTILIZING THIN-FILM LAYERS TO ROUTE FLUID

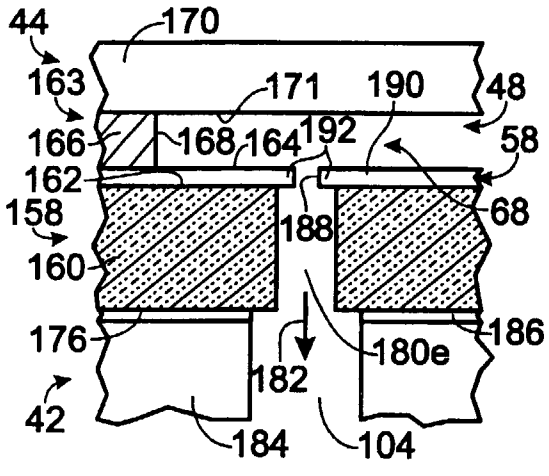

(57) Abstract: Systems (10), including apparatus and methods, for microfluidic processing and/or analysis of samples. The systems include a microfluidic device (14) having a substrate (160) and a thin-film layer (190) formed on the substrate (160). The thin-film layer (190) may be included in electronics (58) formed on the substrate (160). The electronics (58) may provide electronic devices configured to sense or modify a property of the sample. The thin-film layer (190) defines an opening (188) for routing movement of fluid and/or sample within the device.

WO 2004/042367 A3