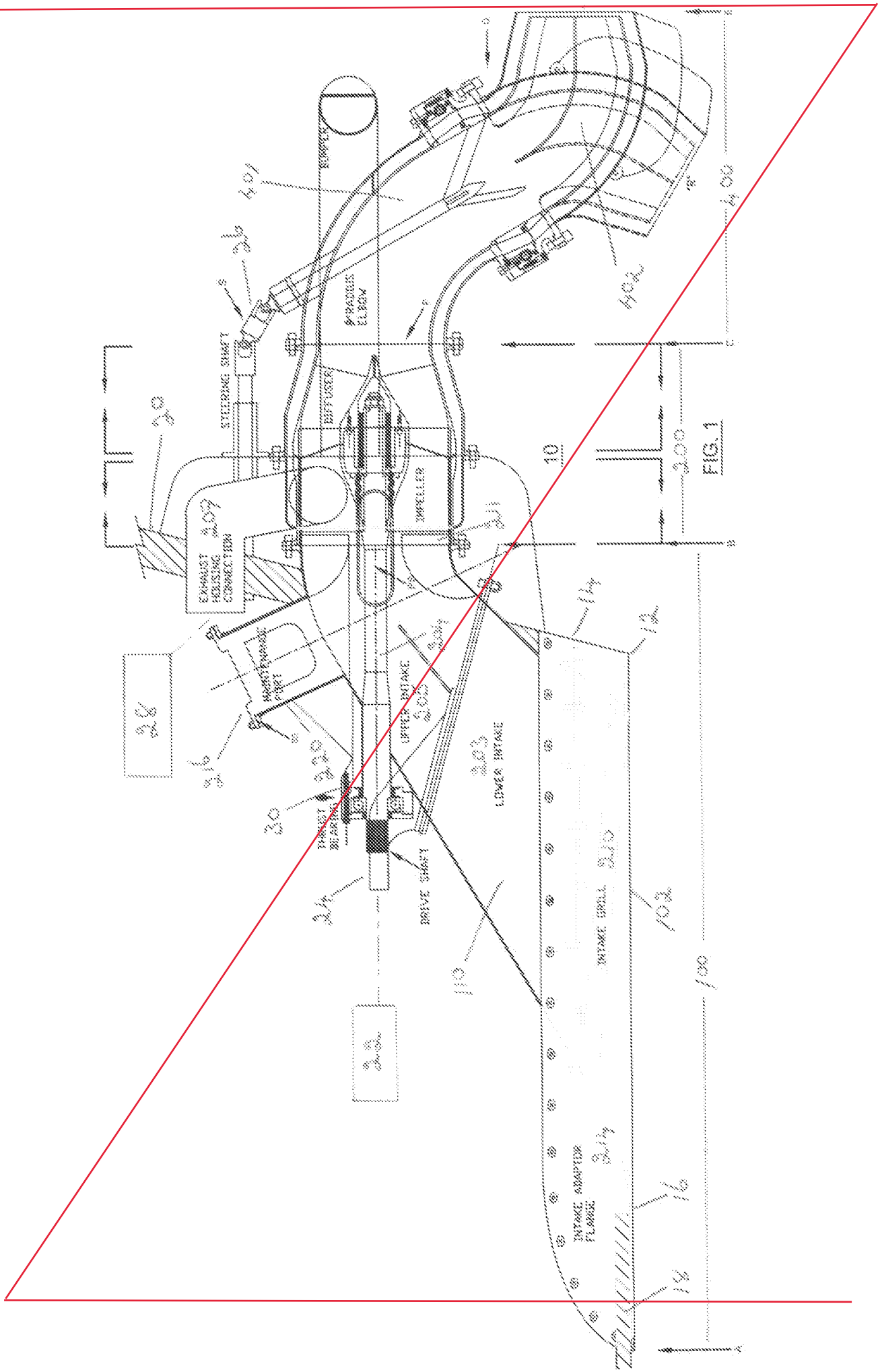
BUMPER
STEERING SHAFT
RADIUS ELBOW
DIFFUSER
IMPELLER
EXHAUST HOUSING CONNECTION
MAINTENANCE PORT
UPPER INTAKE
LOWER INTAKE
THRUST BEARING
DRIVE SHAFT
INTAKE GRILL
INTAKE ADAPTOR FLANGE
10
20
22
24
26
28
30
100
102
110
12
14
16
18
200
400
401
402
203
204
205
209
210
211
214
216
220

FIG. 1

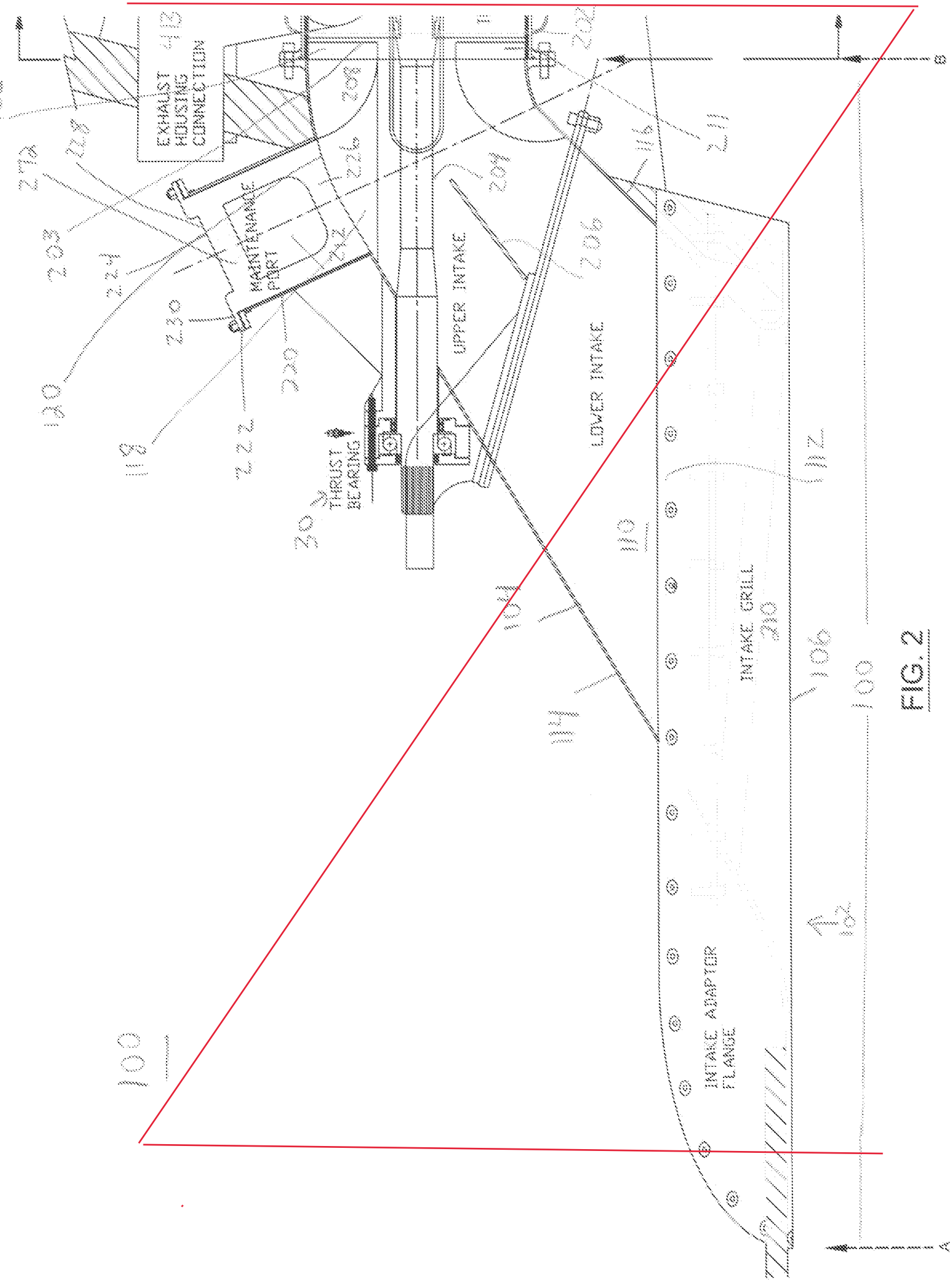
EXHAUST HOUSING CONNECTION
MAINTENANCE PORT
UPPER INTAKE
LOWER INTAKE
THRUST BEARING
INTAKE GRILL
INTAKE ADAPTOR FLANGE
100
102
104
106
110
112
114
116
118
120
202
203
204
206
208
211
220
222
224
226
228
230
272
30

FIG. 2

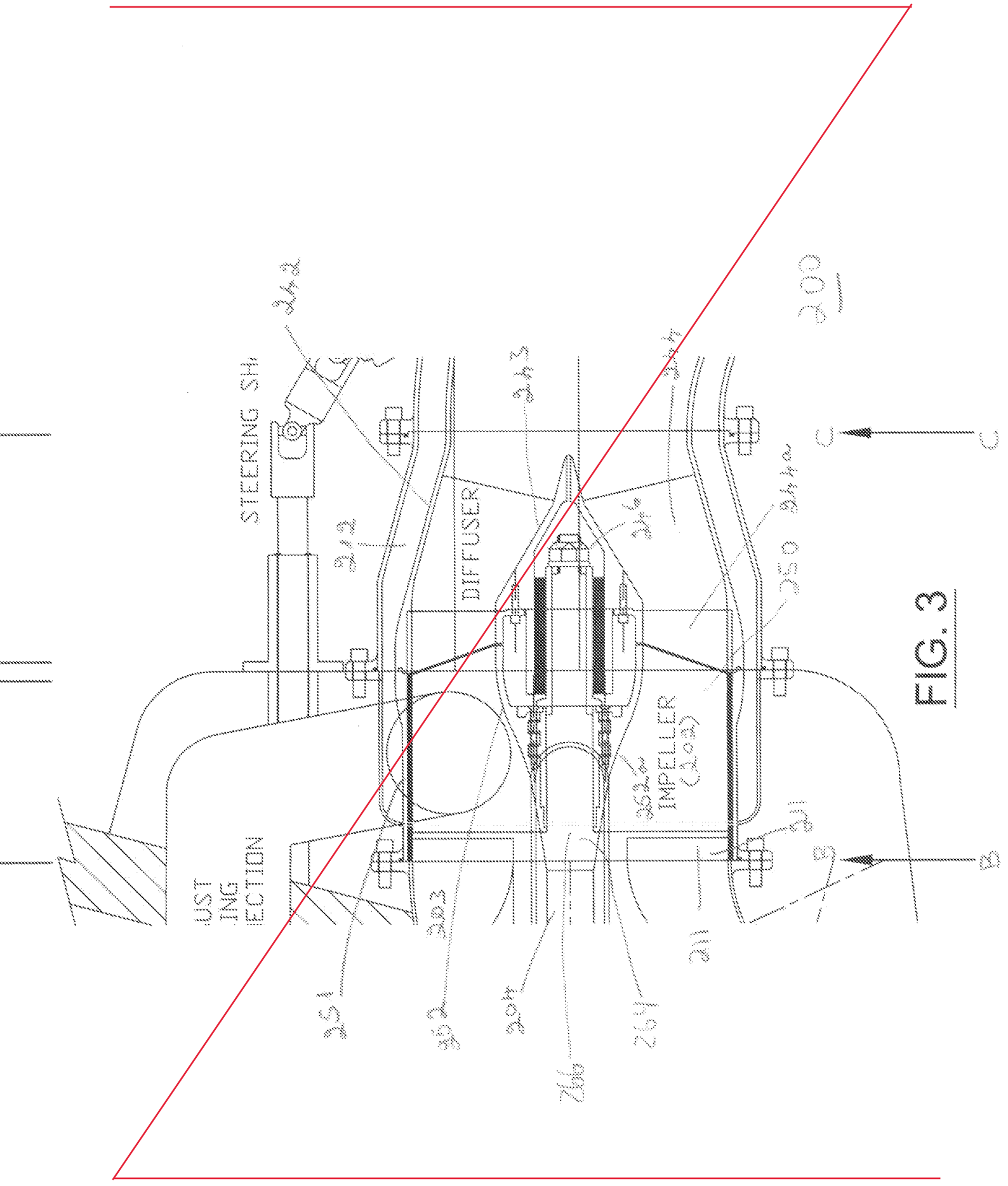


FIG. 3

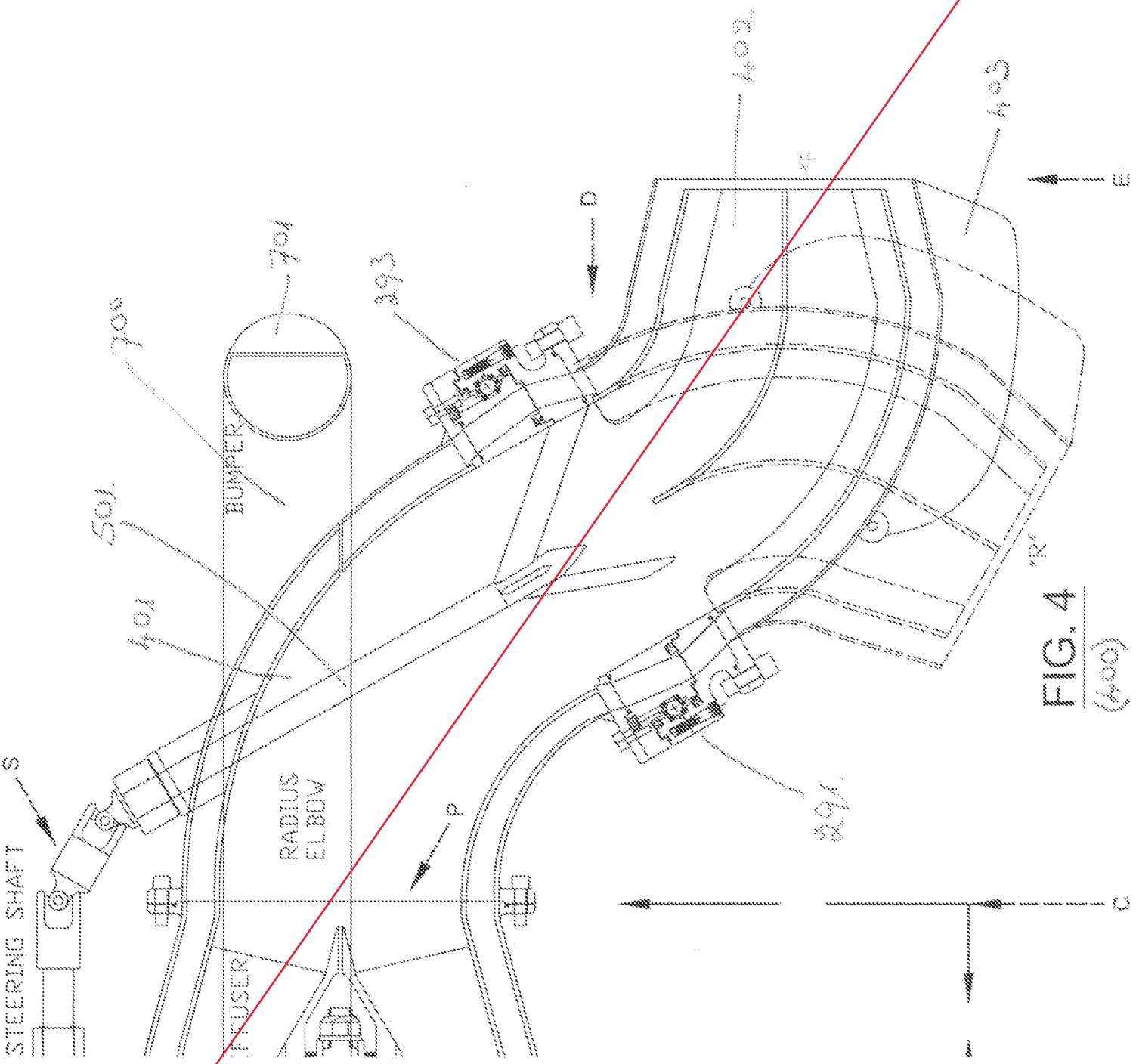


FIG. 4
(PRIOR ART)

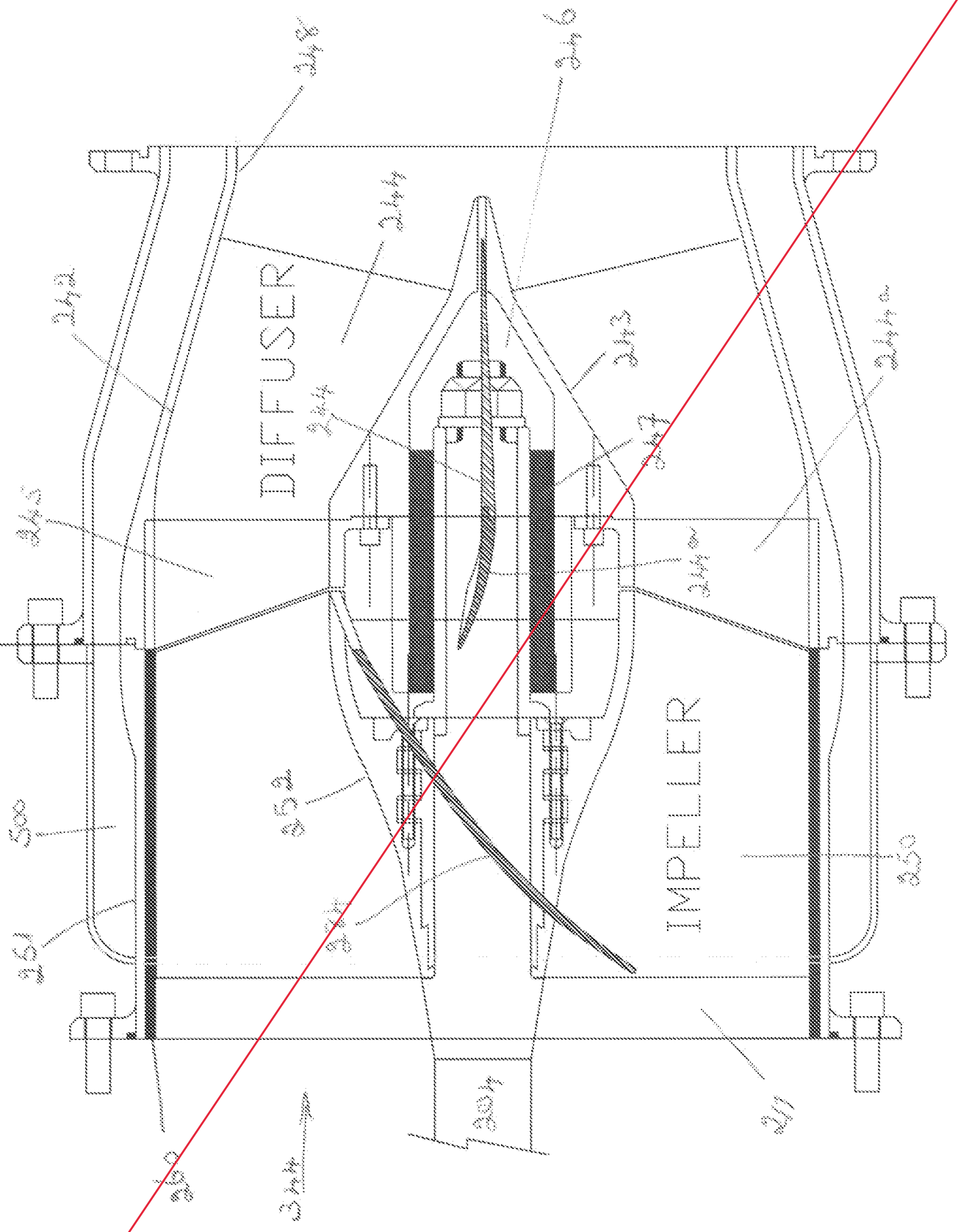


FIG. 5

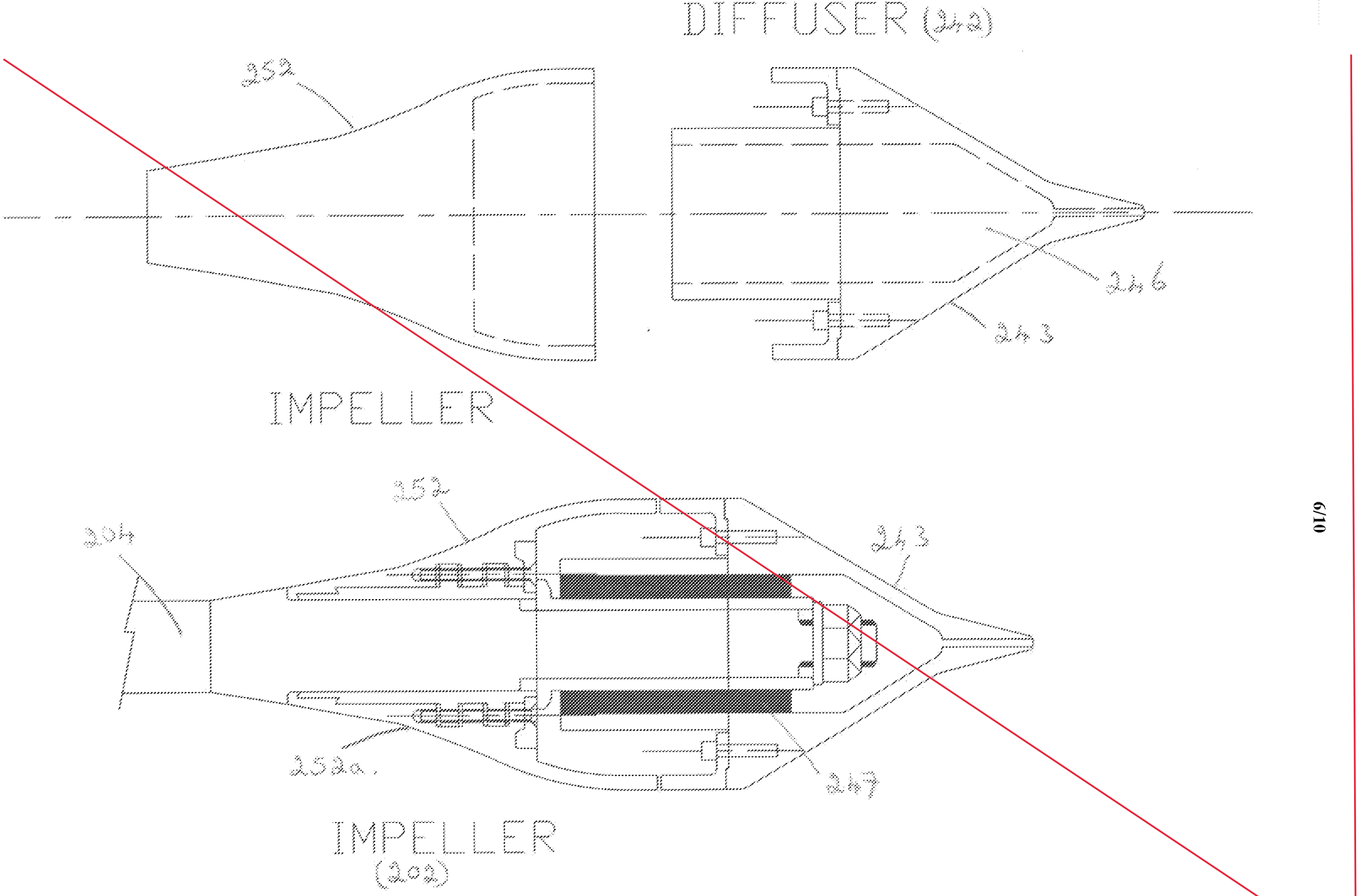
DIFFUSER (203)
352
346
343
IMPELLER
352
304
343
352a
347
IMPELLER
(202)

FIG. 6

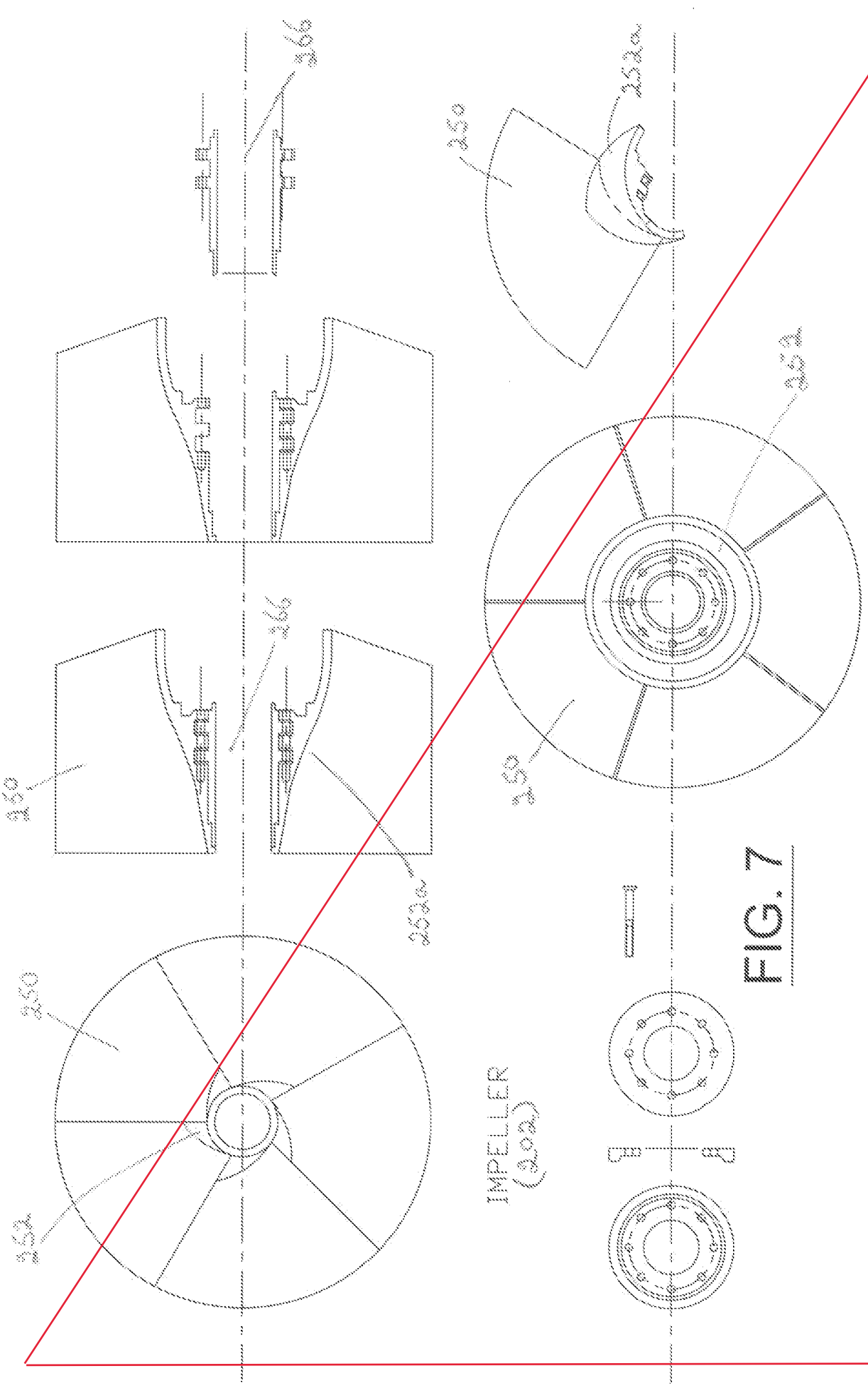


FIG. 7

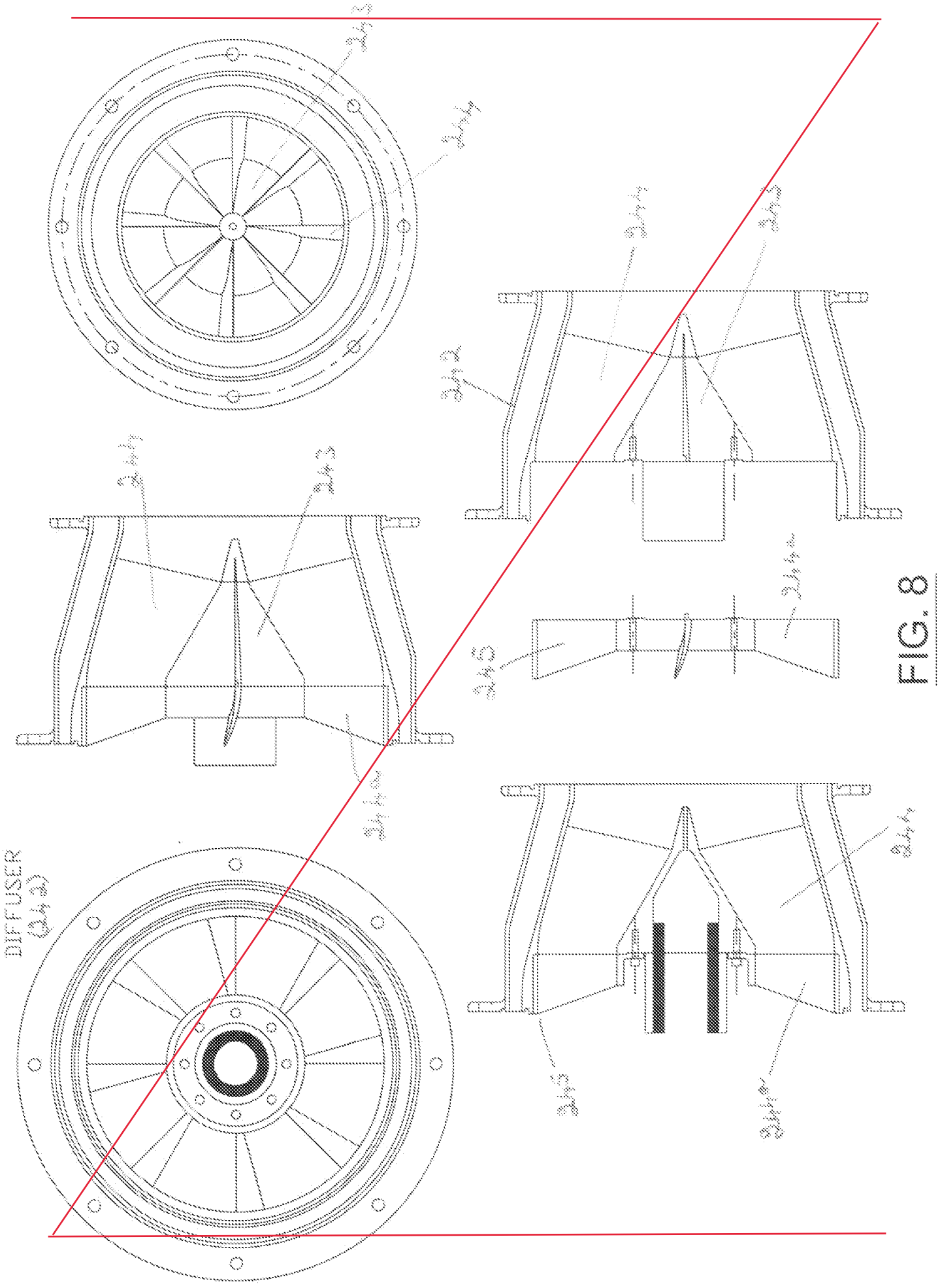


FIG. 8

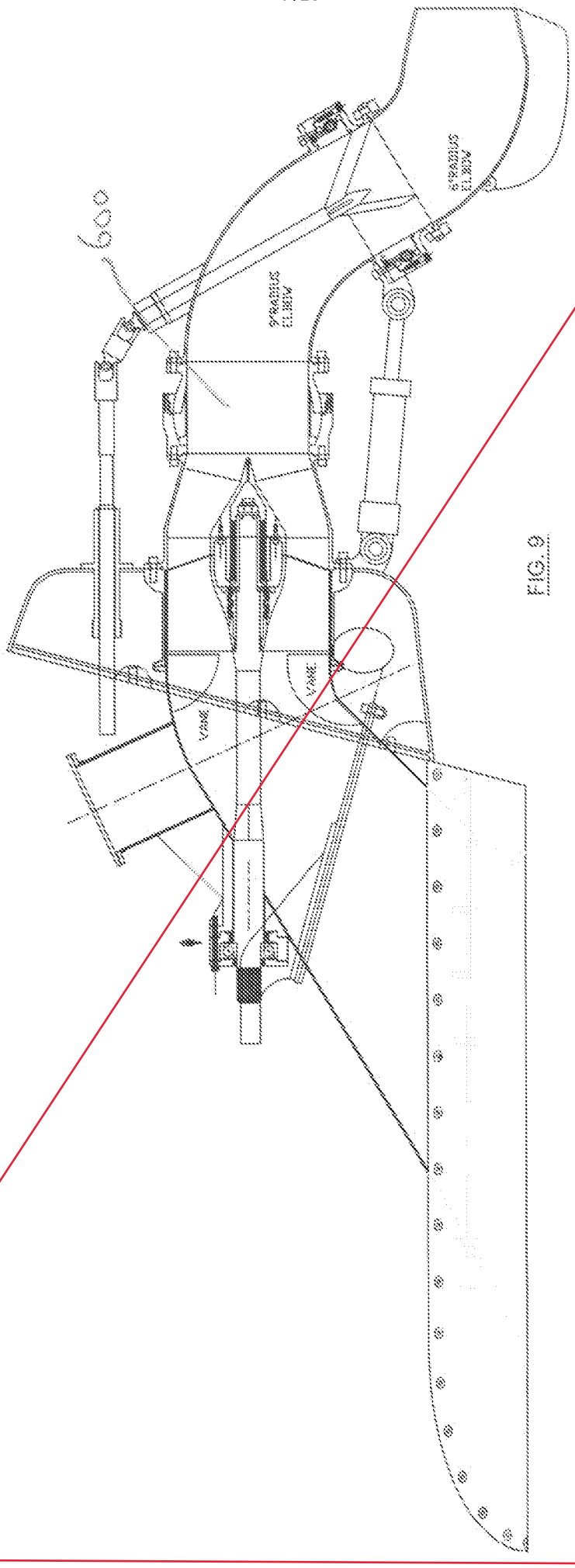


FIG. 6

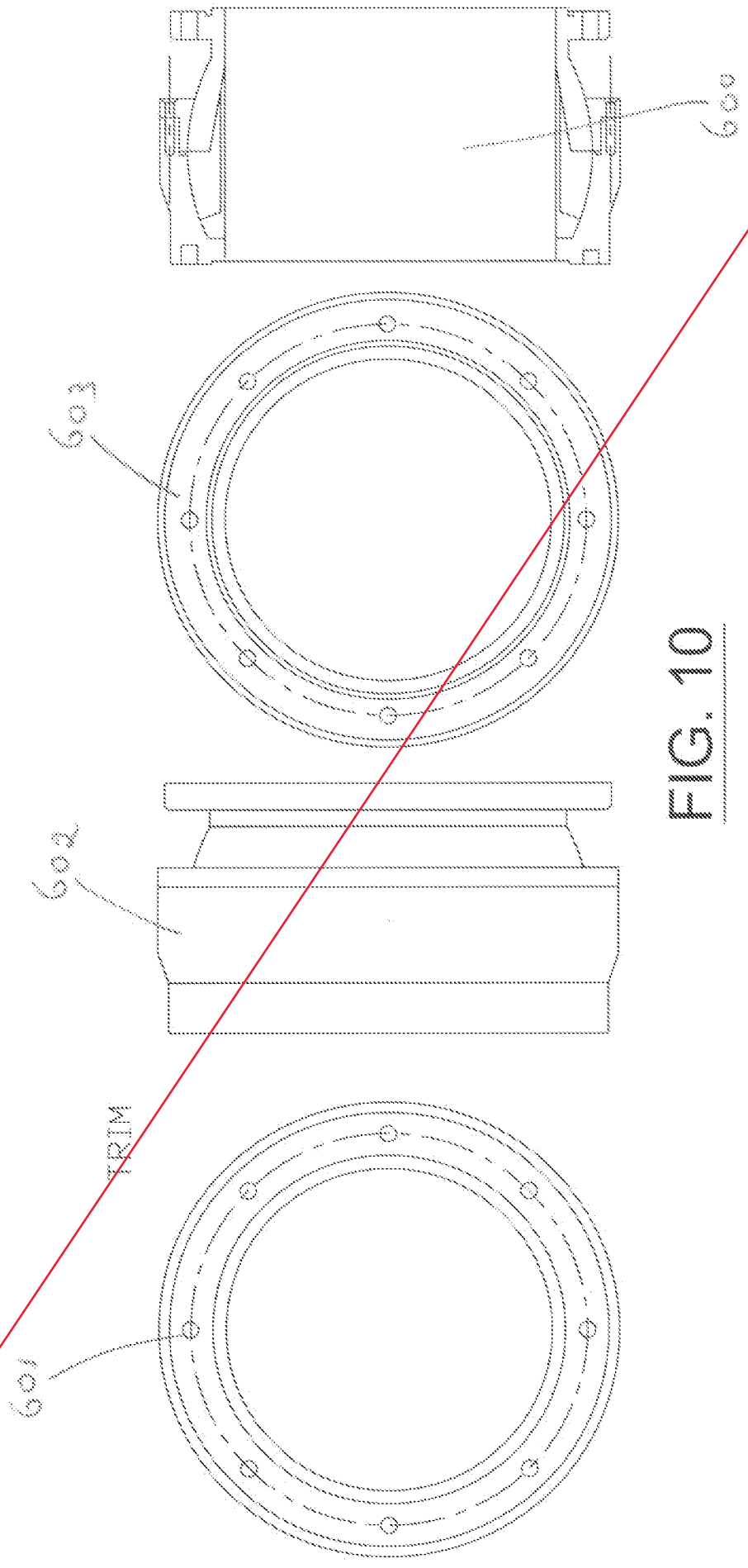


FIG. 10