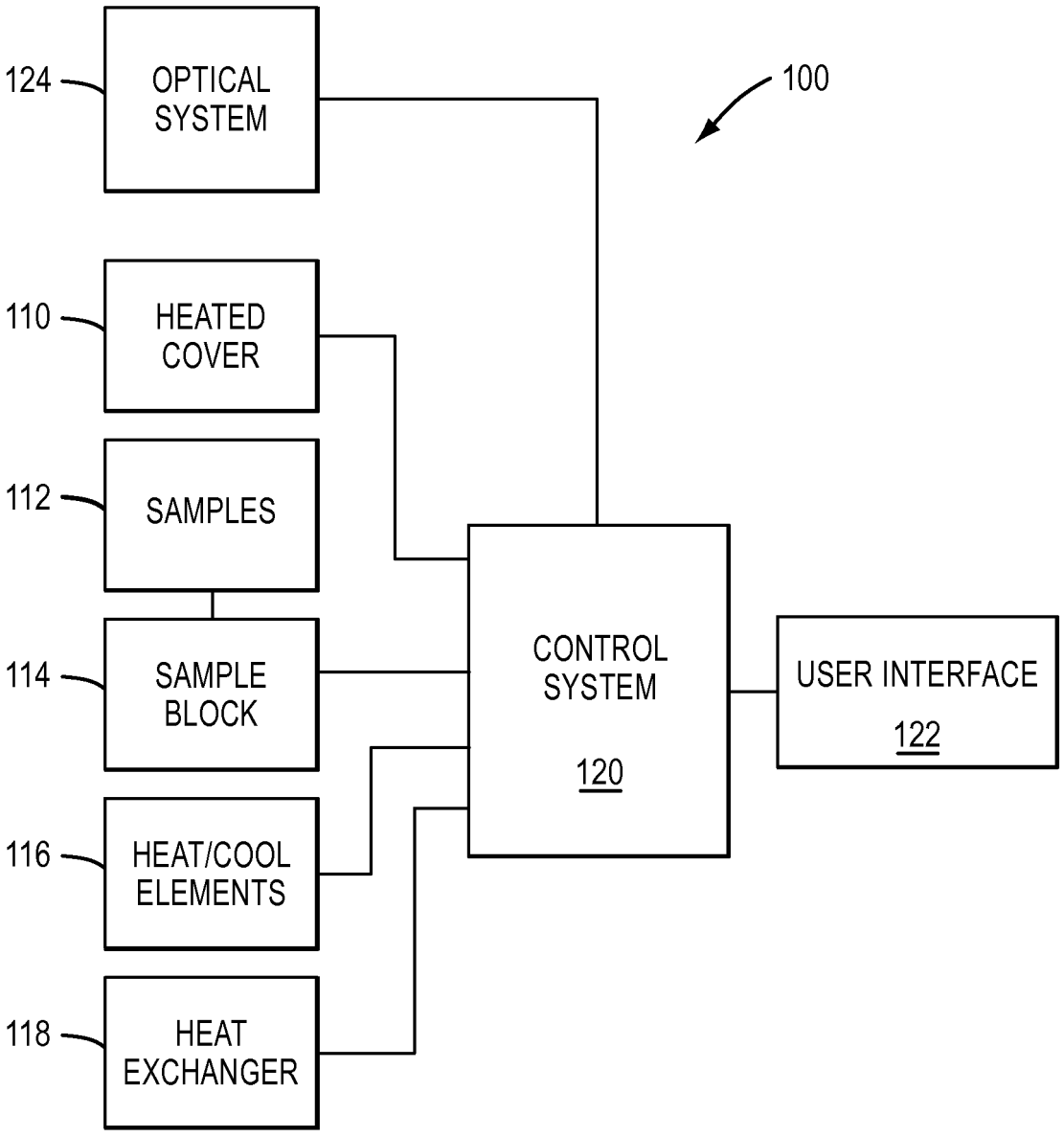
124
OPTICAL SYSTEM
100
110
HEATED COVER
112
SAMPLES
114
SAMPLE BLOCK
116
HEAT/COOL ELEMENTS
118
HEAT EXCHANGER
CONTROL SYSTEM
120
USER INTERFACE
122

FIG. 1

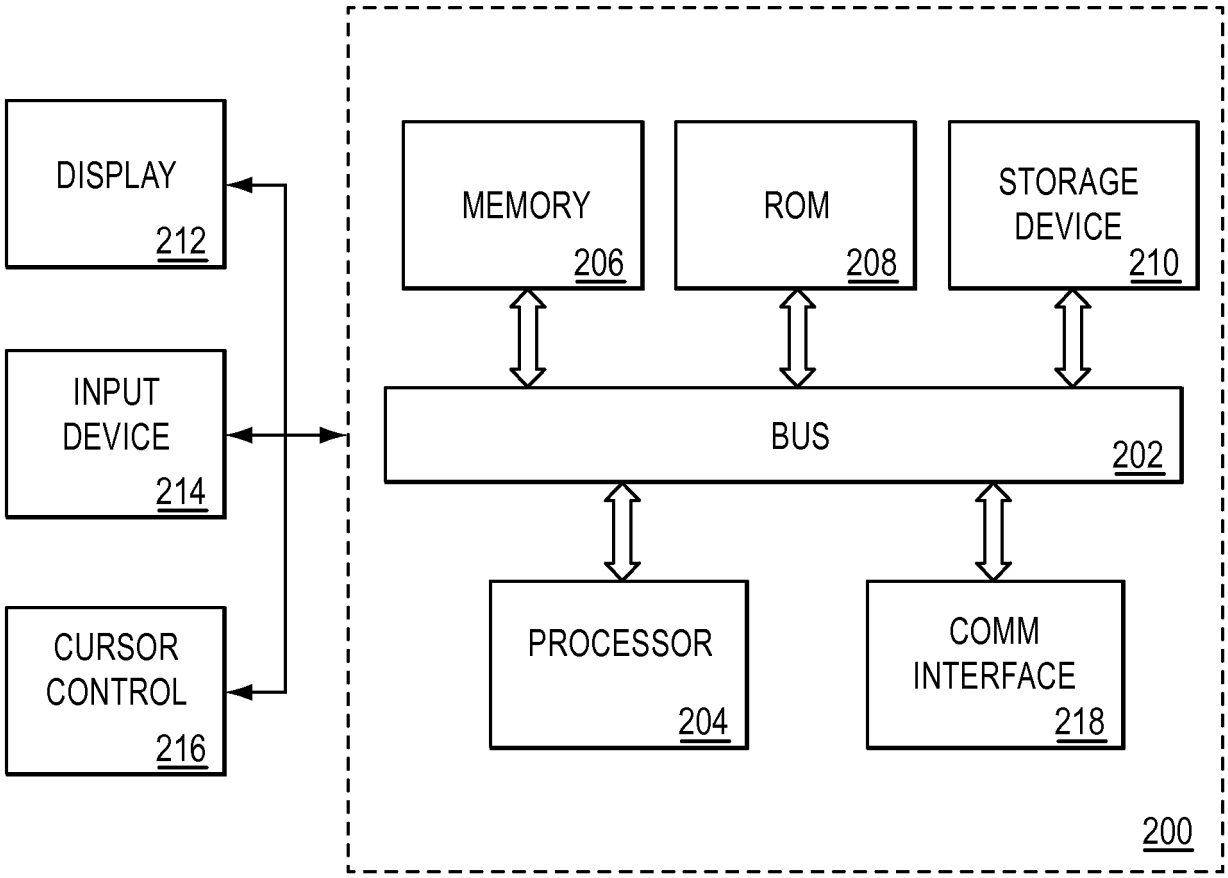
DISPLAY
212
INPUT
DEVICE
214
CURSOR
CONTROL
216
MEMORY
206
ROM
208
STORAGE
DEVICE
210
BUS
202
PROCESSOR
204
COMM
INTERFACE
218
200

FIG. 2

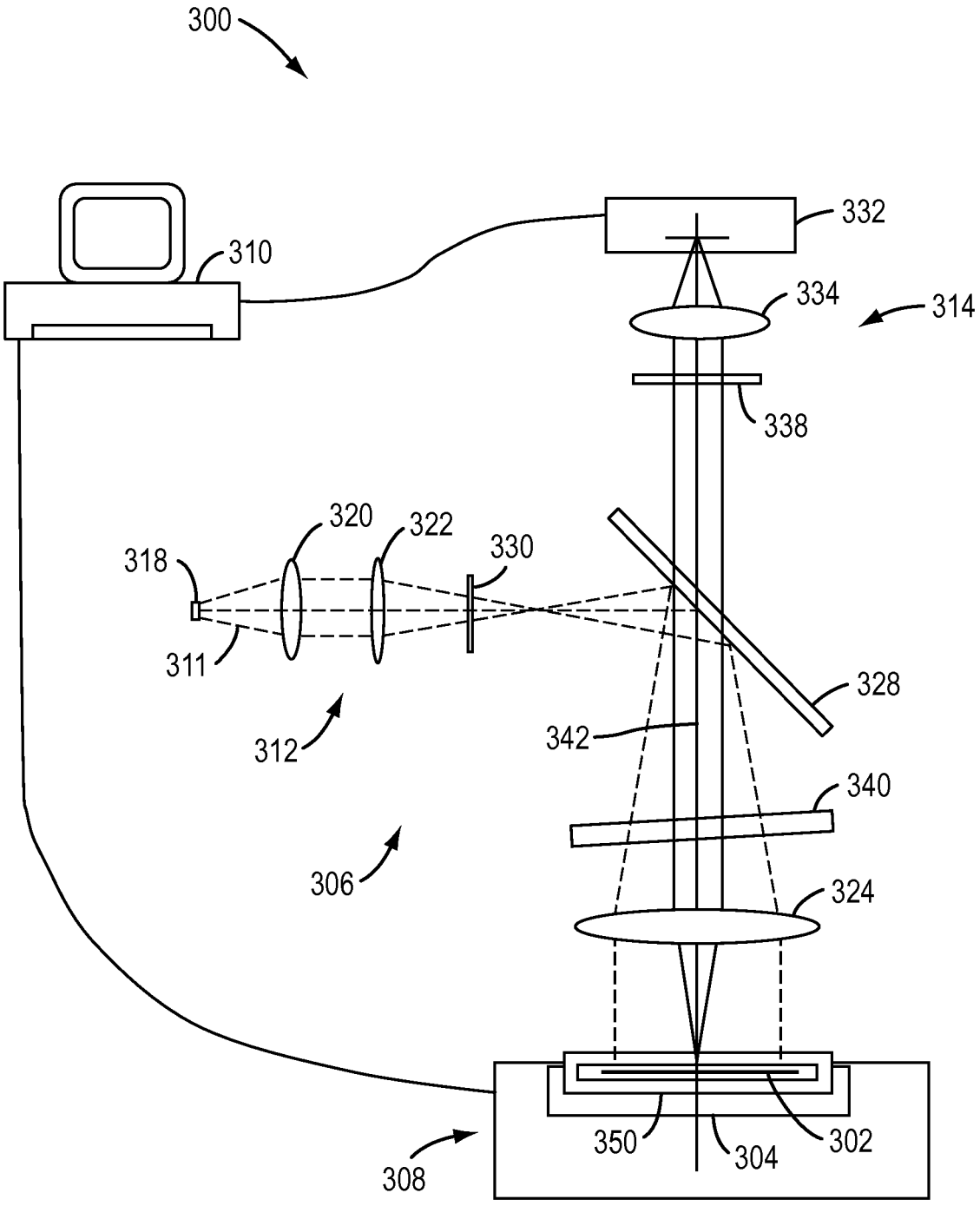
300
310
332
334
314
338
320
322
330
318
311
328
312
342
340
306
324
350
304
302
308

FIG. 3

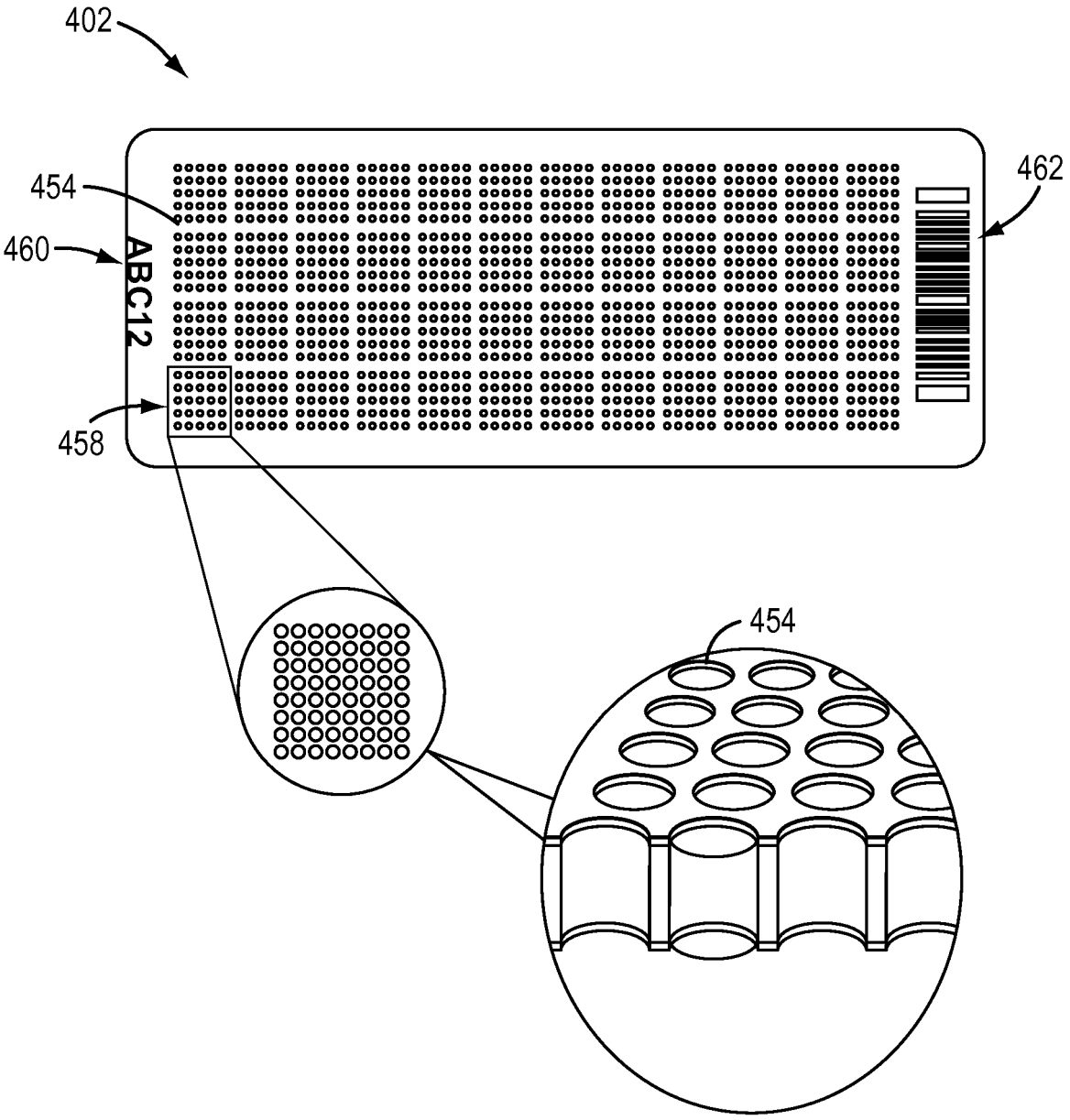

FIG. 4

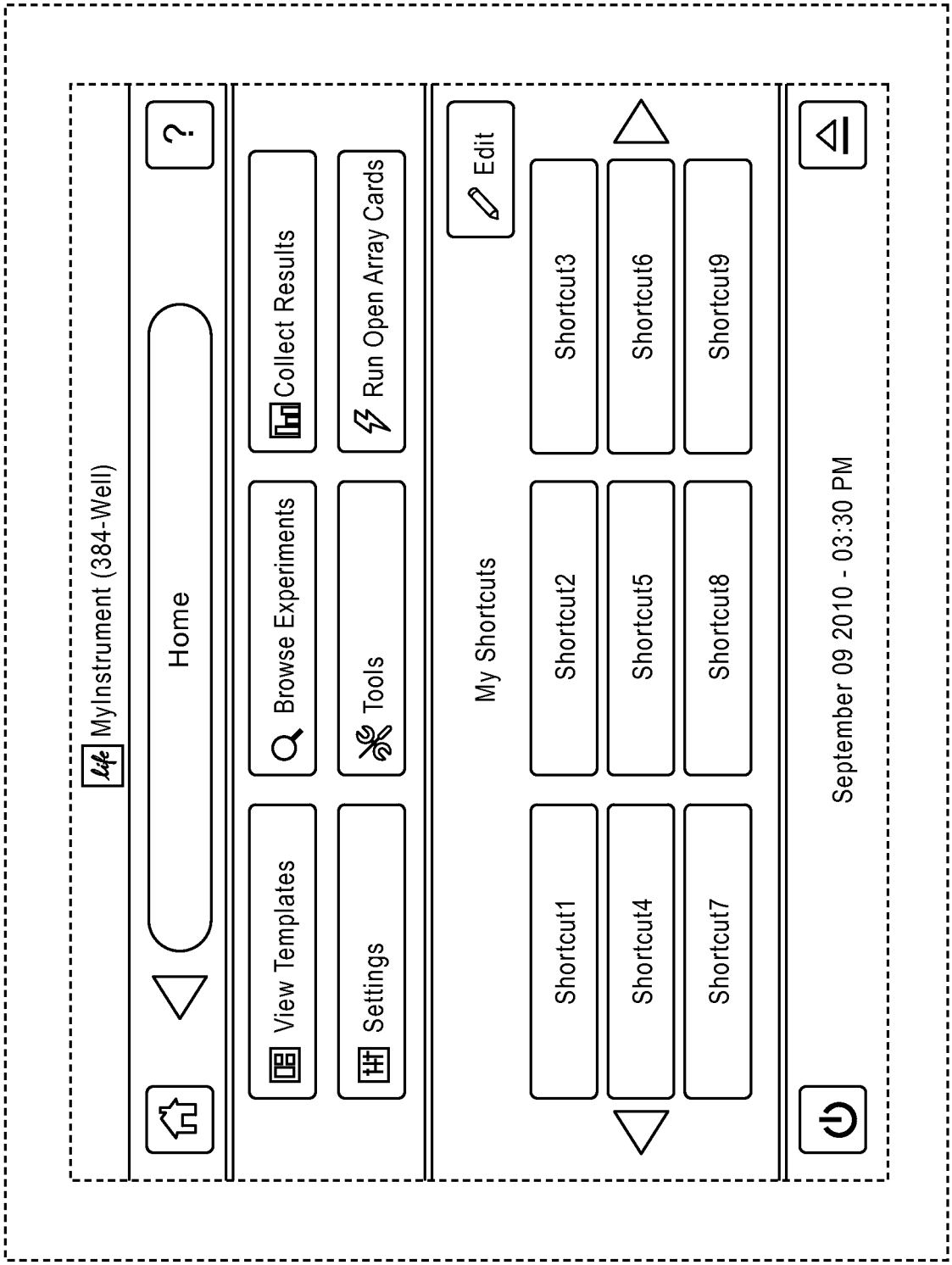
MyInstrument (384-Well)
Home
?
View Templates
Browse Experiments
Collect Results
Settings
Tools
Run Open Array Cards
Edit
My Shortcuts
Shortcut1
Shortcut2
Shortcut3
Shortcut4
Shortcut5
Shortcut6
Shortcut7
Shortcut8
Shortcut9
September 09 2010 - 03:30 PM

FIG. 5

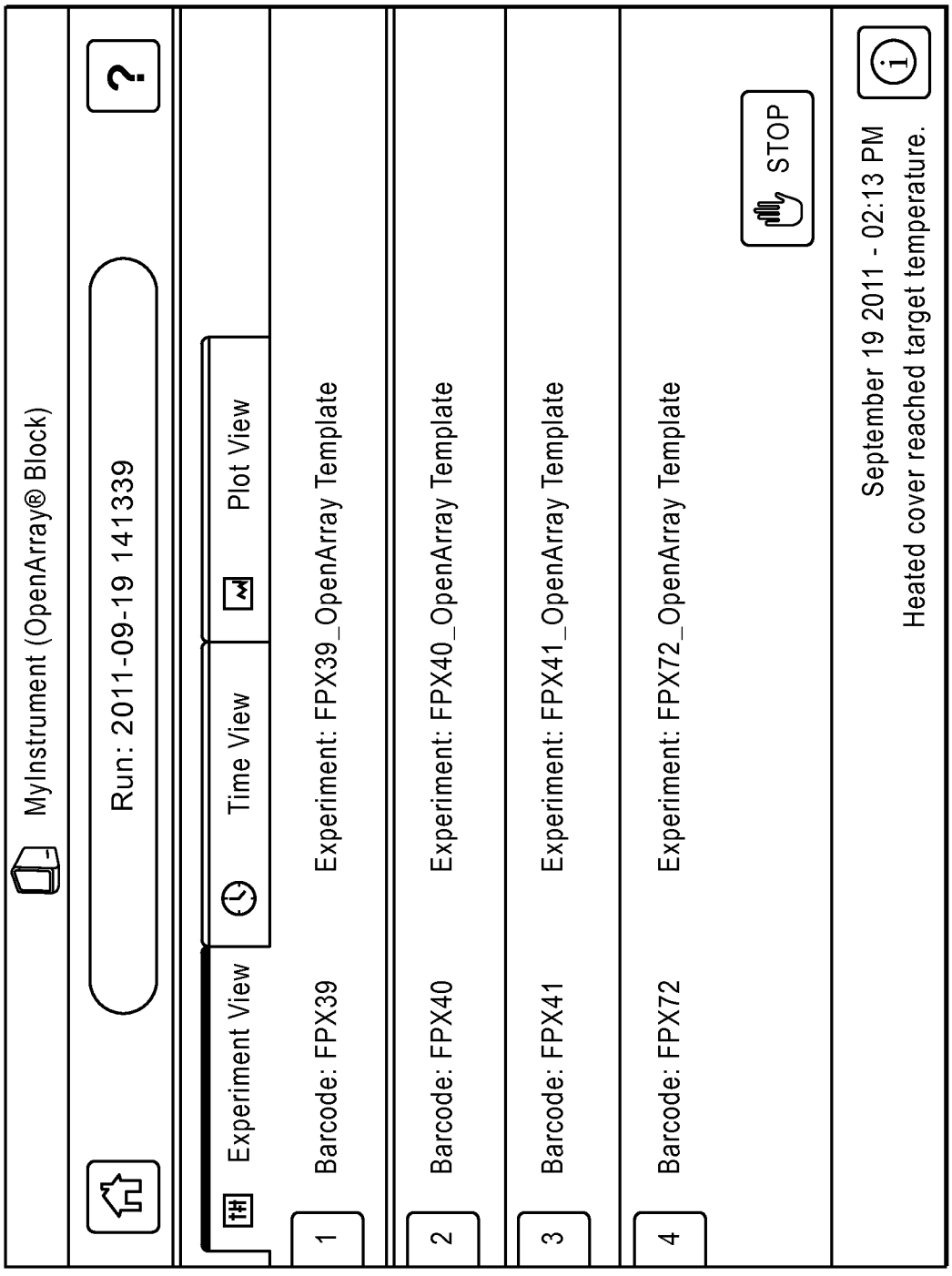
MyInstrument (OpenArray® Block)
Run: 2011-09-19 141339
?
Experiment View
Time View
Plot View
1
Barcode: FPX39
Experiment: FPX39_OpenArray Template
2
Barcode: FPX40
Experiment: FPX40_OpenArray Template
3
Barcode: FPX41
Experiment: FPX41_OpenArray Template
4
Barcode: FPX72
Experiment: FPX72_OpenArray Template
STOP
September 19 2011 - 02:13 PM
Heated cover reached target temperature.

FIG. 6

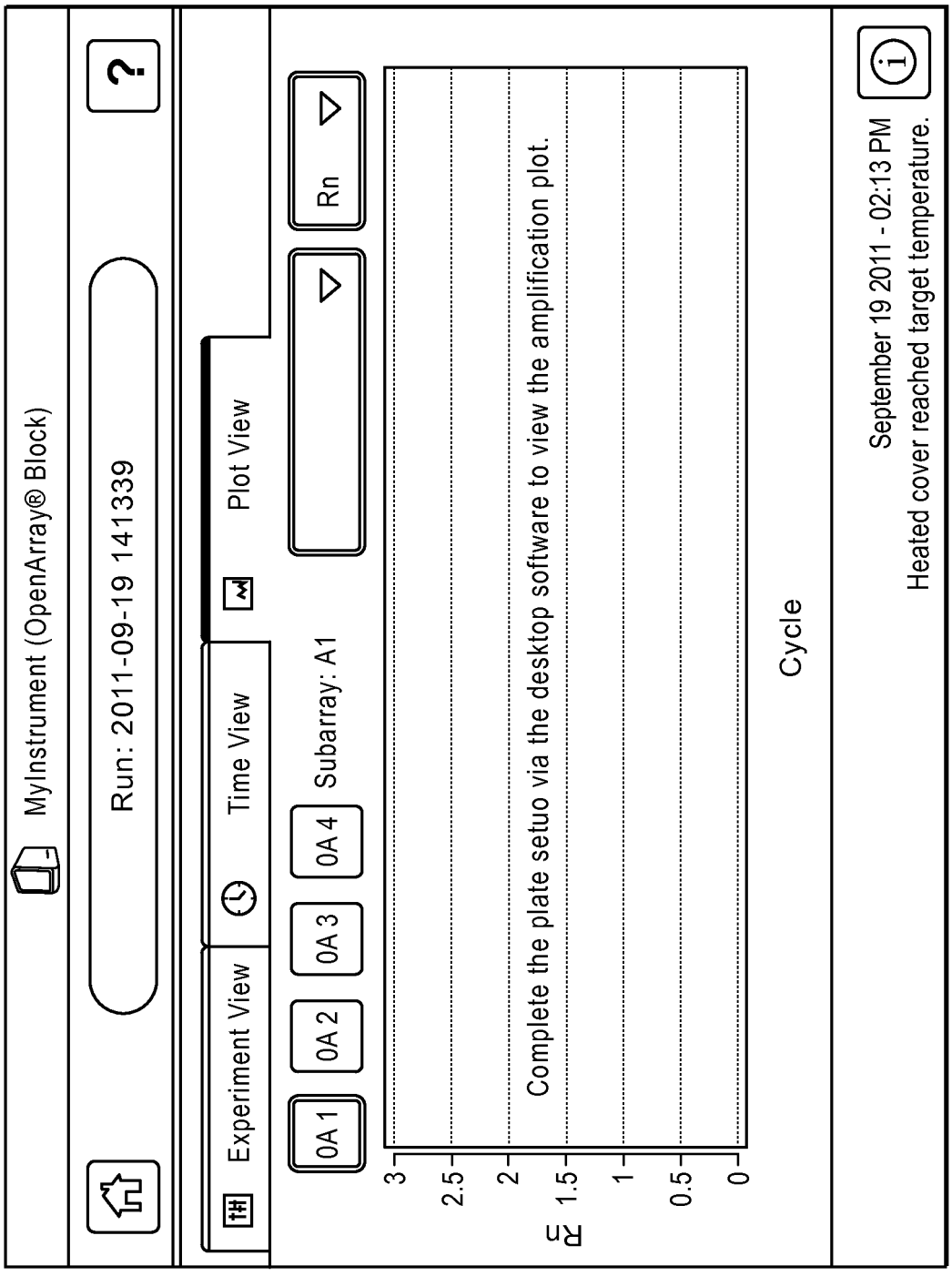
MyInstrument (OpenArray® Block)
Run: 2011-09-19 141339
?
Experiment View
Time View
Plot View
0A 1
0A 2
0A 3
0A 4
Subarray: A1
Rn
Complete the plate setuo via the desktop software to view the amplification plot.
Rn
3
2.5
2
1.5
1
0.5
0
Cycle
September 19 2011 - 02:13 PM
Heated cover reached target temperature.

FIG. 7

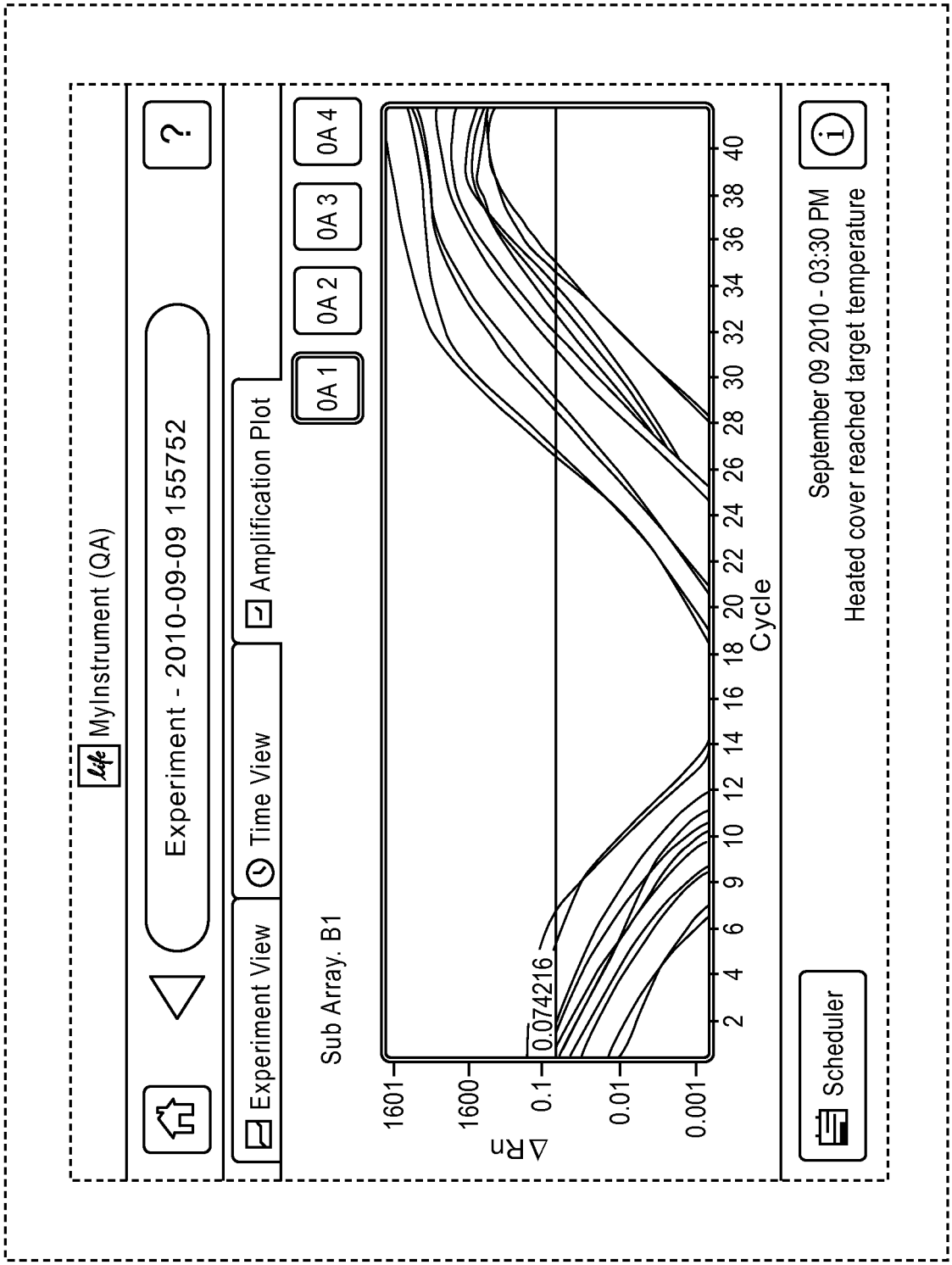
MyInstrument (QA)
Experiment - 2010-09-09 155752
?
Experiment View
Time View
Amplification Plot
Sub Array. B1
0A 1
0A 2
0A 3
0A 4
ΔRn
1601
1600
0.1
0.01
0.001
0.074216
2 4 6 9 10 12 14 16 18 20 22 24 26 28 30 32 34 36 38 40
Cycle
September 09 2010 - 03:30 PM
Heated cover reached target temperature
Scheduler

FIG. 8

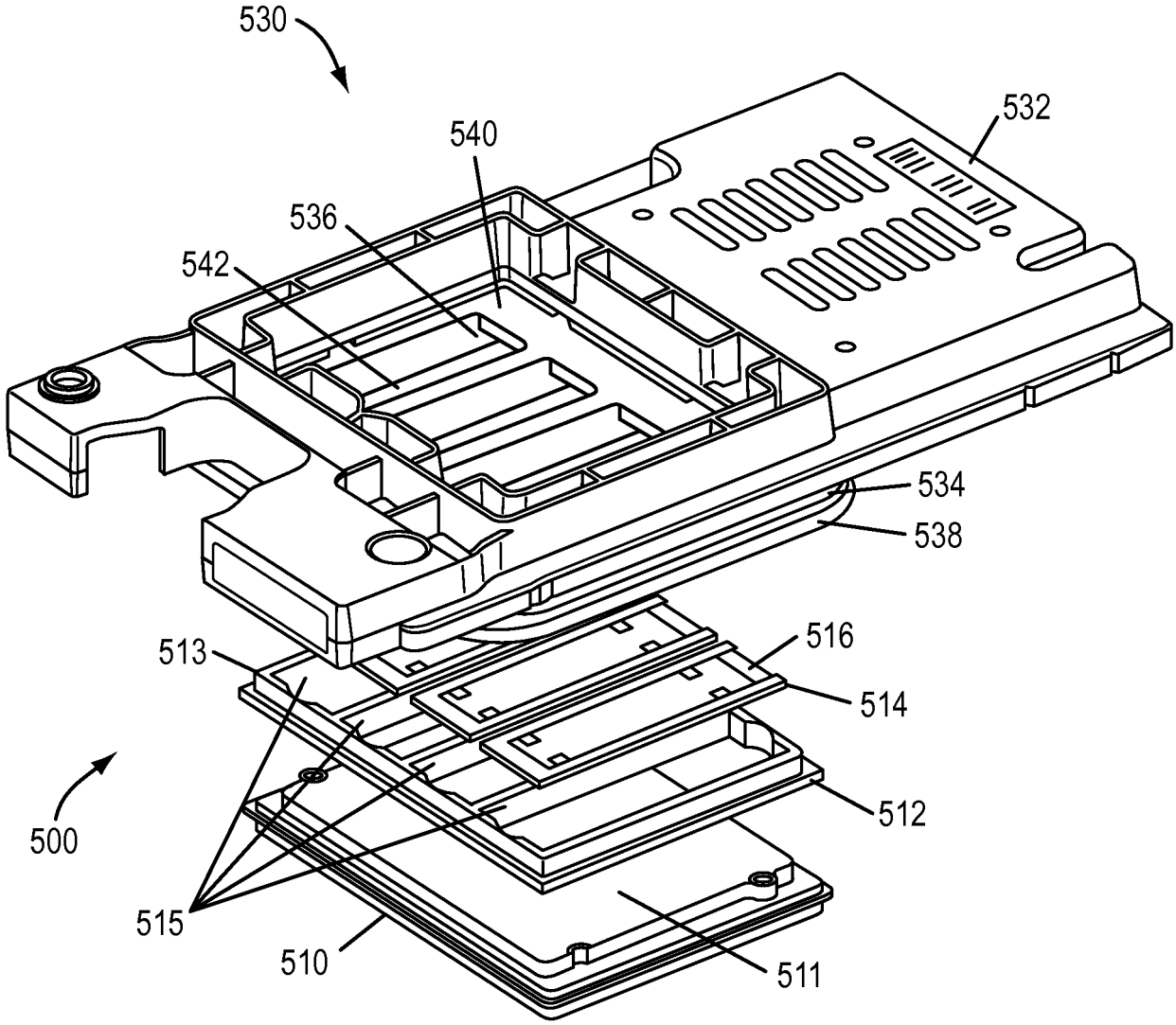

FIG. 9A

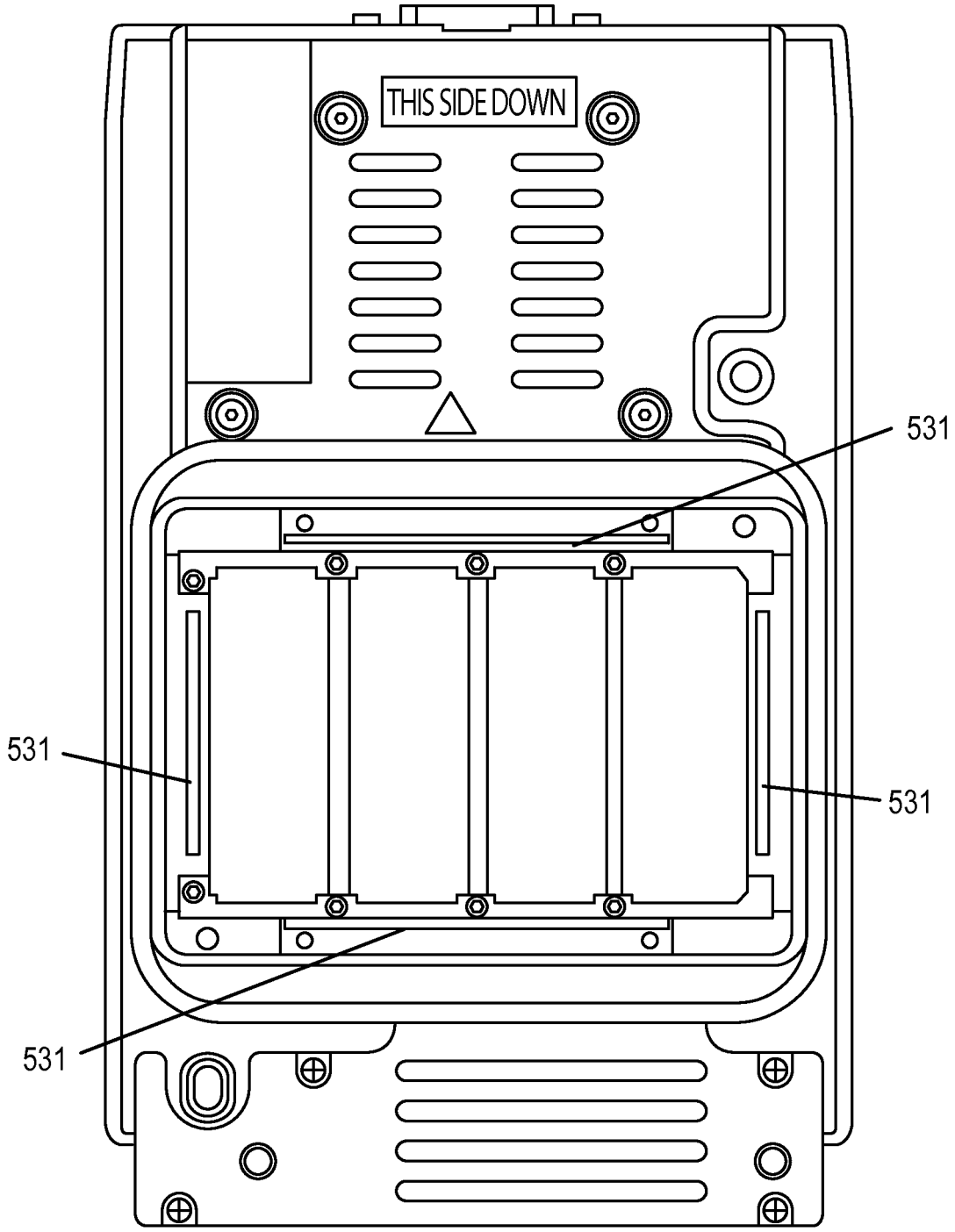

FIG. 9B

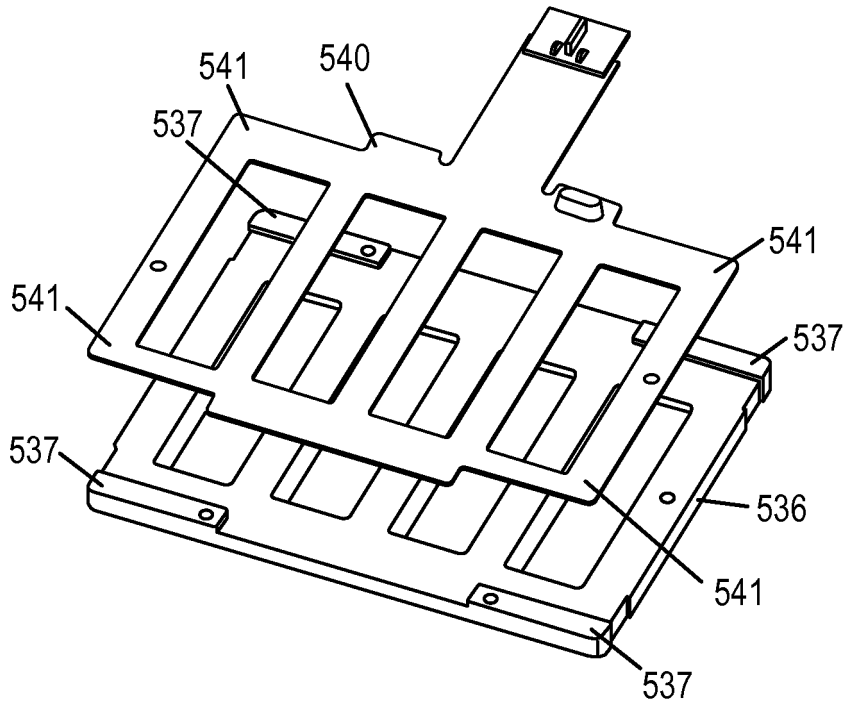

FIG. 10A

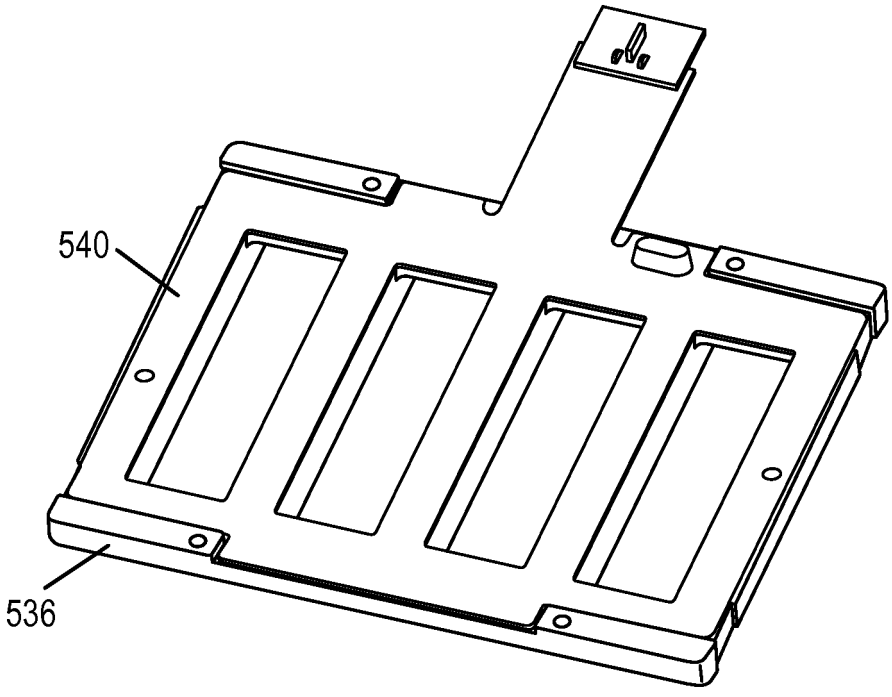

FIG. 10B

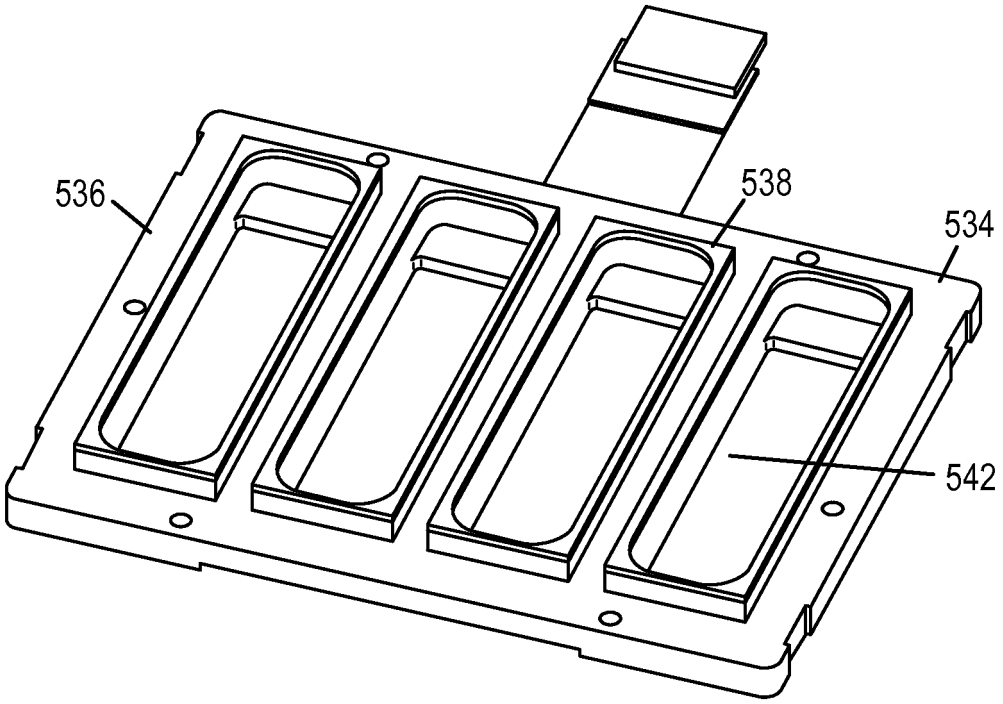

FIG. 11

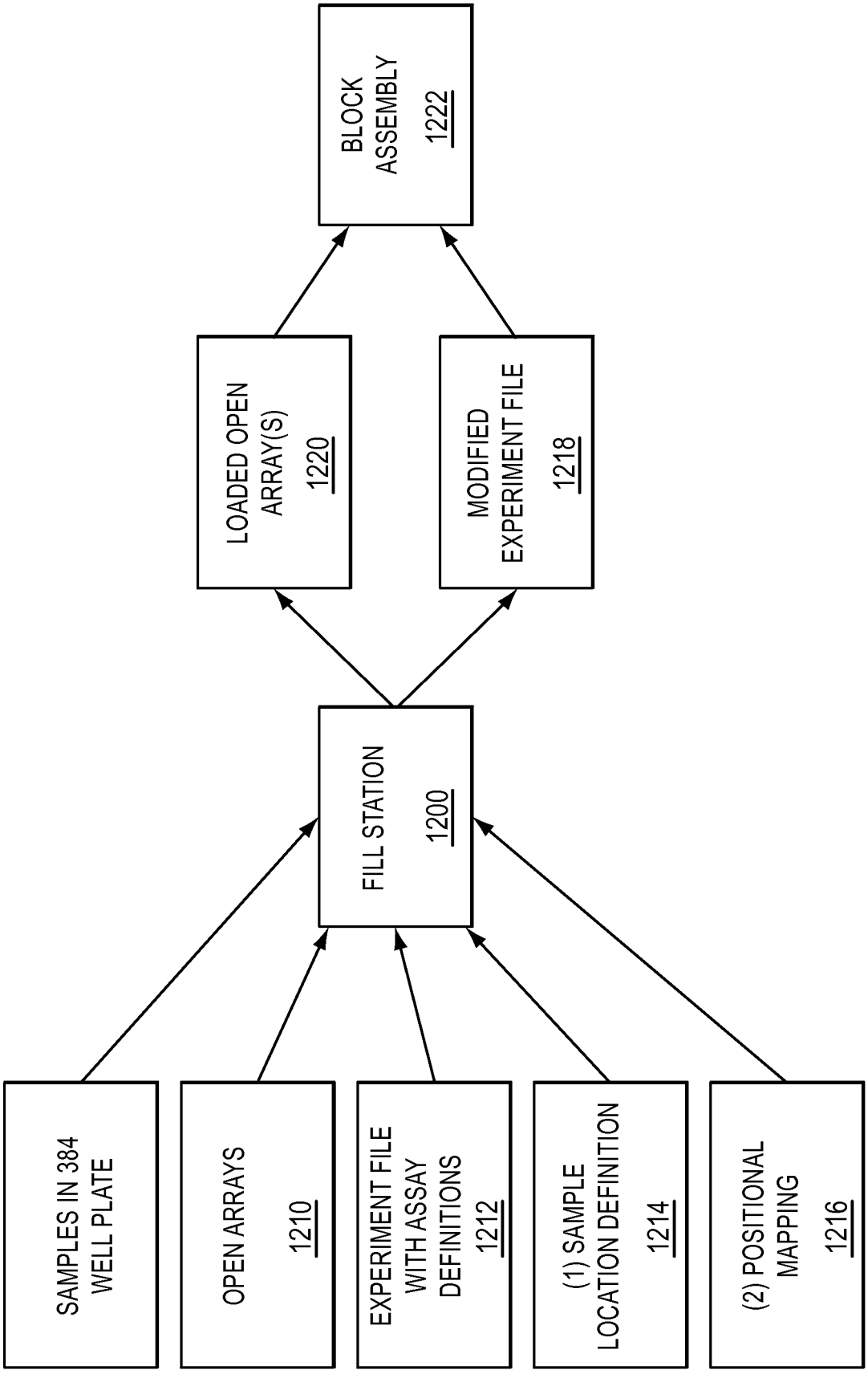
BLOCK ASSEMBLY 1222
LOADED OPEN ARRAY(S) 1220
MODIFIED EXPERIMENT FILE 1218
FILL STATION 1200
SAMPLES IN 384 WELL PLATE
OPEN ARRAYS 1210
EXPERIMENT FILE WITH ASSAY DEFINITIONS 1212
(1) SAMPLE LOCATION DEFINITION 1214
(2) POSITIONAL MAPPING 1216

FIG. 12

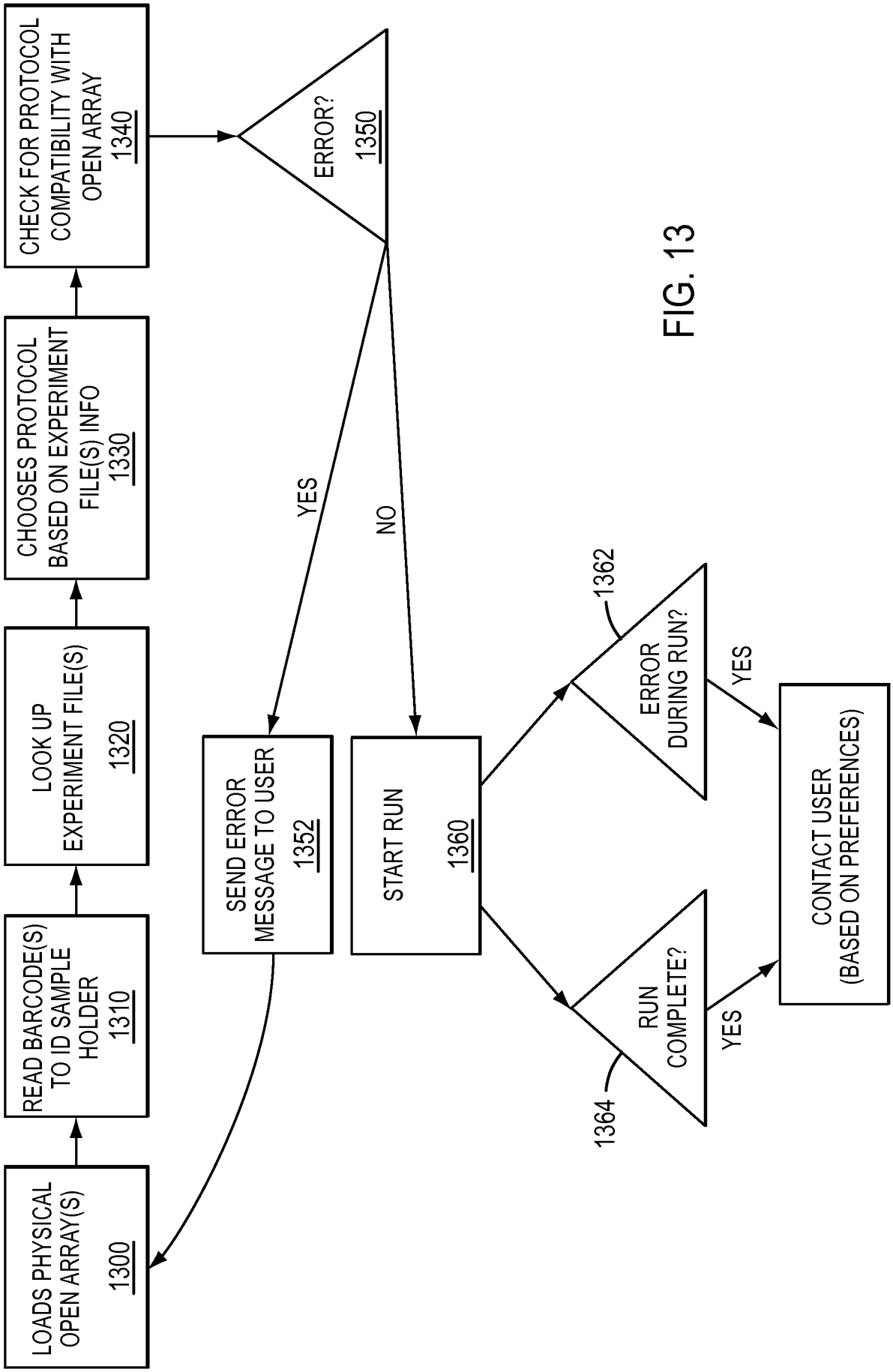
LOADS PHYSICAL OPEN ARRAY(S) 1300
READ BARCODE(S) TO ID SAMPLE HOLDER 1310
LOOK UP EXPERIMENT FILE(S) 1320
CHOOSES PROTOCOL BASED ON EXPERIMENT FILE(S) INFO 1330
CHECK FOR PROTOCOL COMPATIBILITY WITH OPEN ARRAY 1340
ERROR? 1350
YES
NO
SEND ERROR MESSAGE TO USER 1352
START RUN 1360
ERROR DURING RUN? 1362
YES
RUN COMPLETE? 1364
YES
CONTACT USER (BASED ON PREFERENCES)

FIG. 13

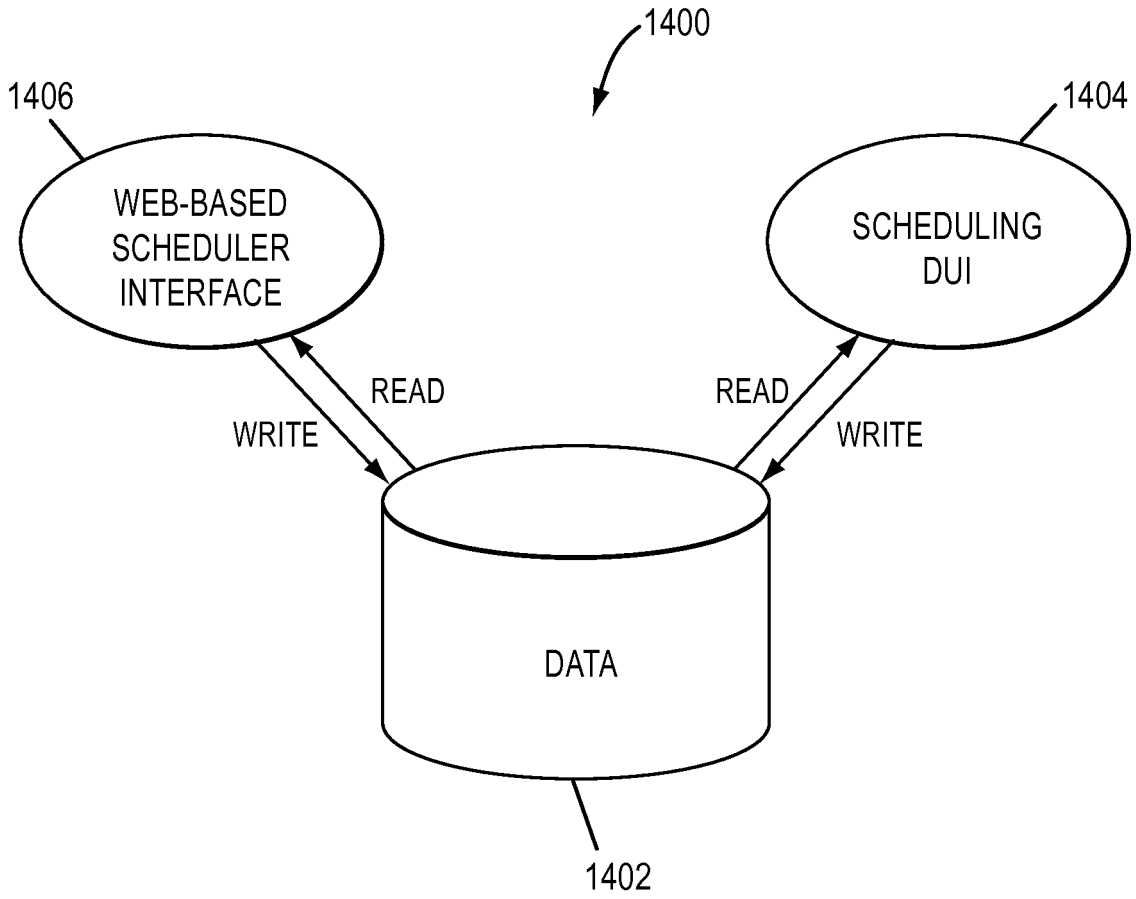
1400
1406
1404
WEB-BASED SCHEDULER INTERFACE
SCHEDULING DUI
READ
WRITE
READ
WRITE
DATA
1402

FIG. 14

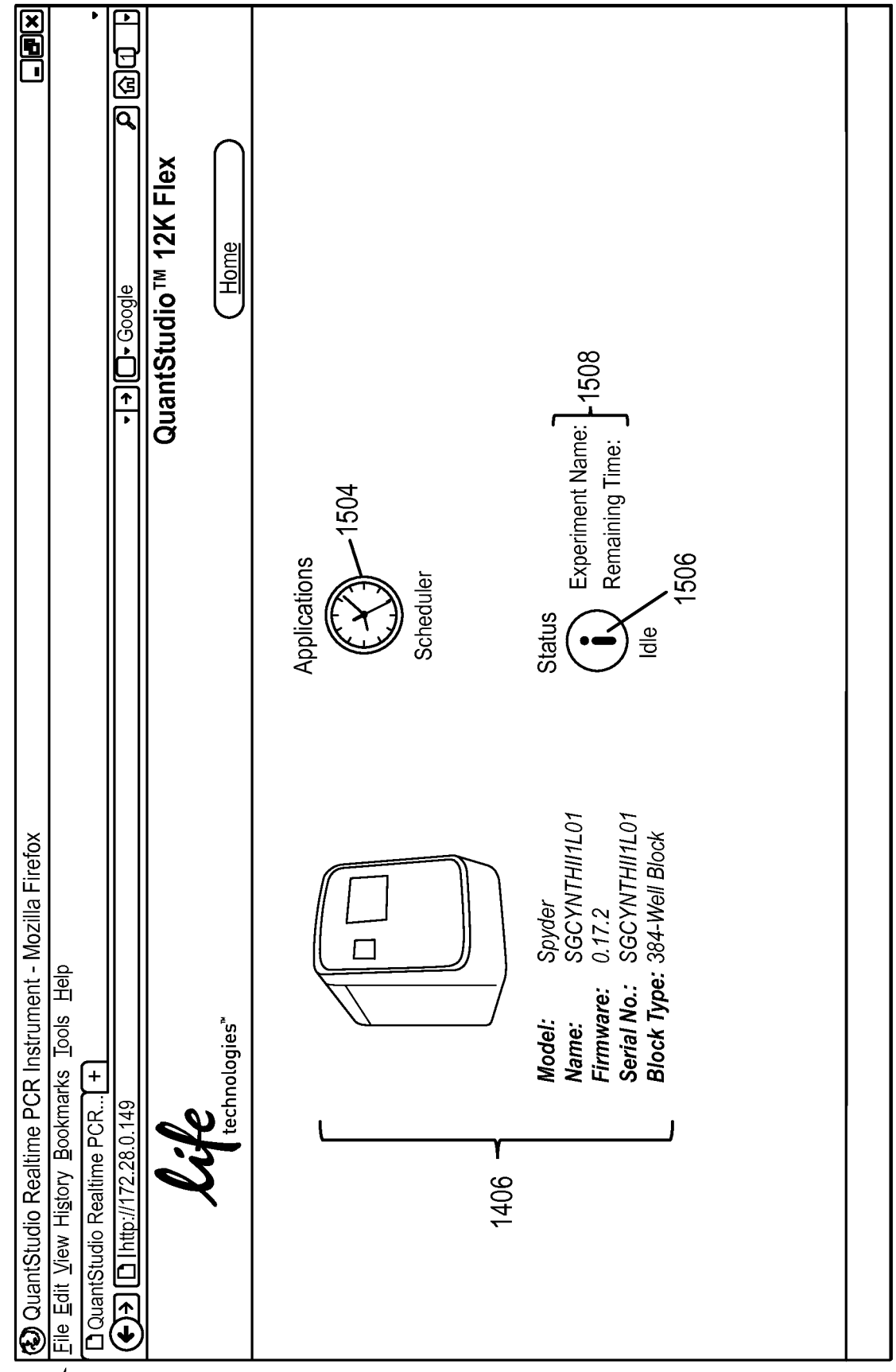
1500
QuantStudio Realtime PCR Instrument - Mozilla Firefox
File Edit View History Bookmarks Tools Help
QuantStudio Realtime PCR...
http://172.28.0.149
Google
life technologies™
QuantStudio™ 12K Flex
Home
Applications
1504
Scheduler
Status
Experiment Name:
Remaining Time:
1508
Idle
1506
1406
Model: Spyder
Name: SGCYNTHII1L01
Firmware: 0.17.2
Serial No.: SGCYNTHII1L01
Block Type: 384-Well Block

FIG. 15A

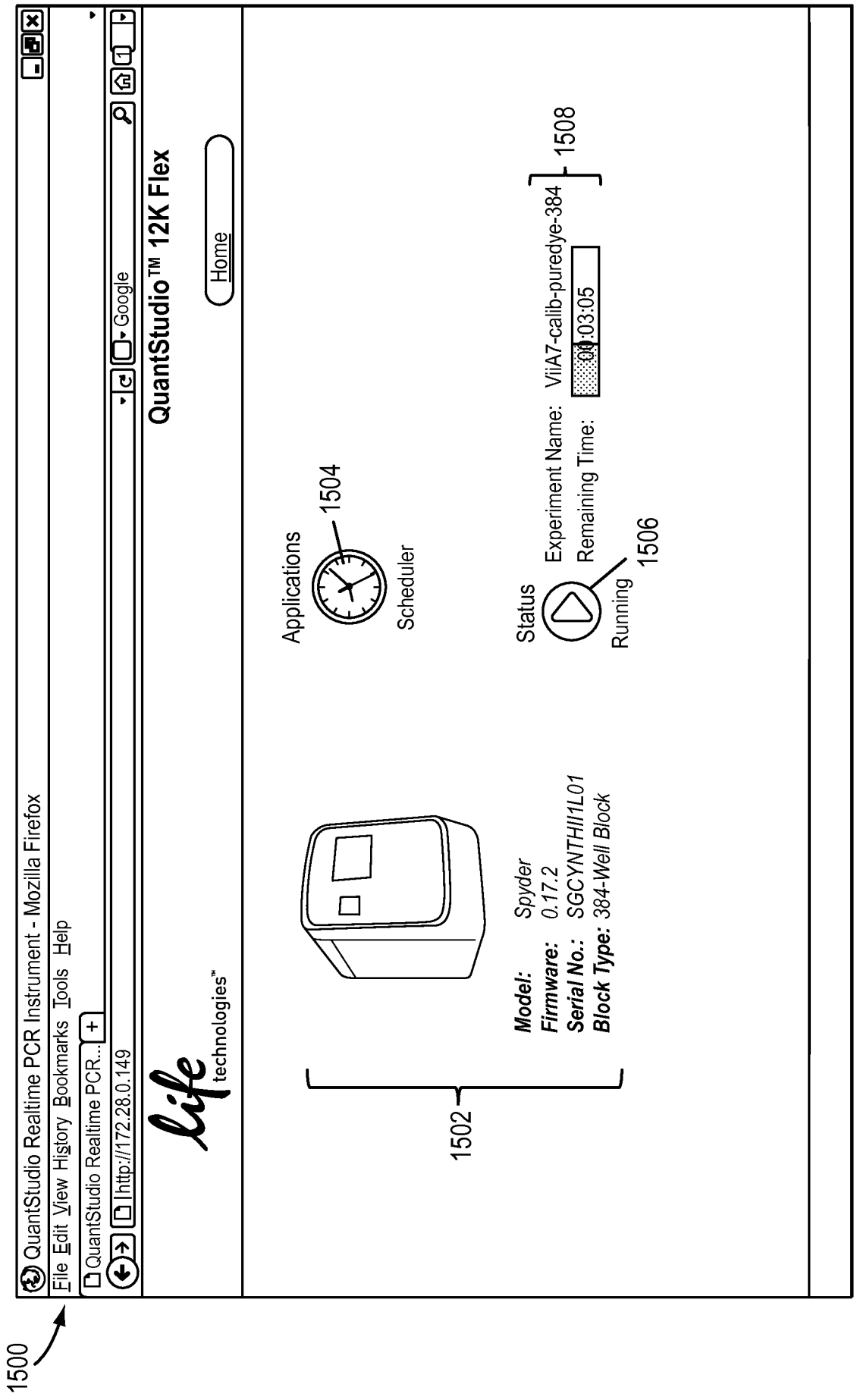
1500
QuantStudio Realtime PCR Instrument - Mozilla Firefox
File Edit View History Bookmarks Tools Help
QuantStudio Realtime PCR...
http://172.28.0.149
Google
QuantStudio™ 12K Flex
life technologies™
Home
Applications
1504
Scheduler
Status
Experiment Name: ViiA7-calib-puredye-384
Remaining Time: 00:03:05
1508
Running
1506
1502
Model: Spyder
Firmware: 0.17.2
Serial No.: SGCYNTHII1L01
Block Type: 384-Well Block

FIG. 15B

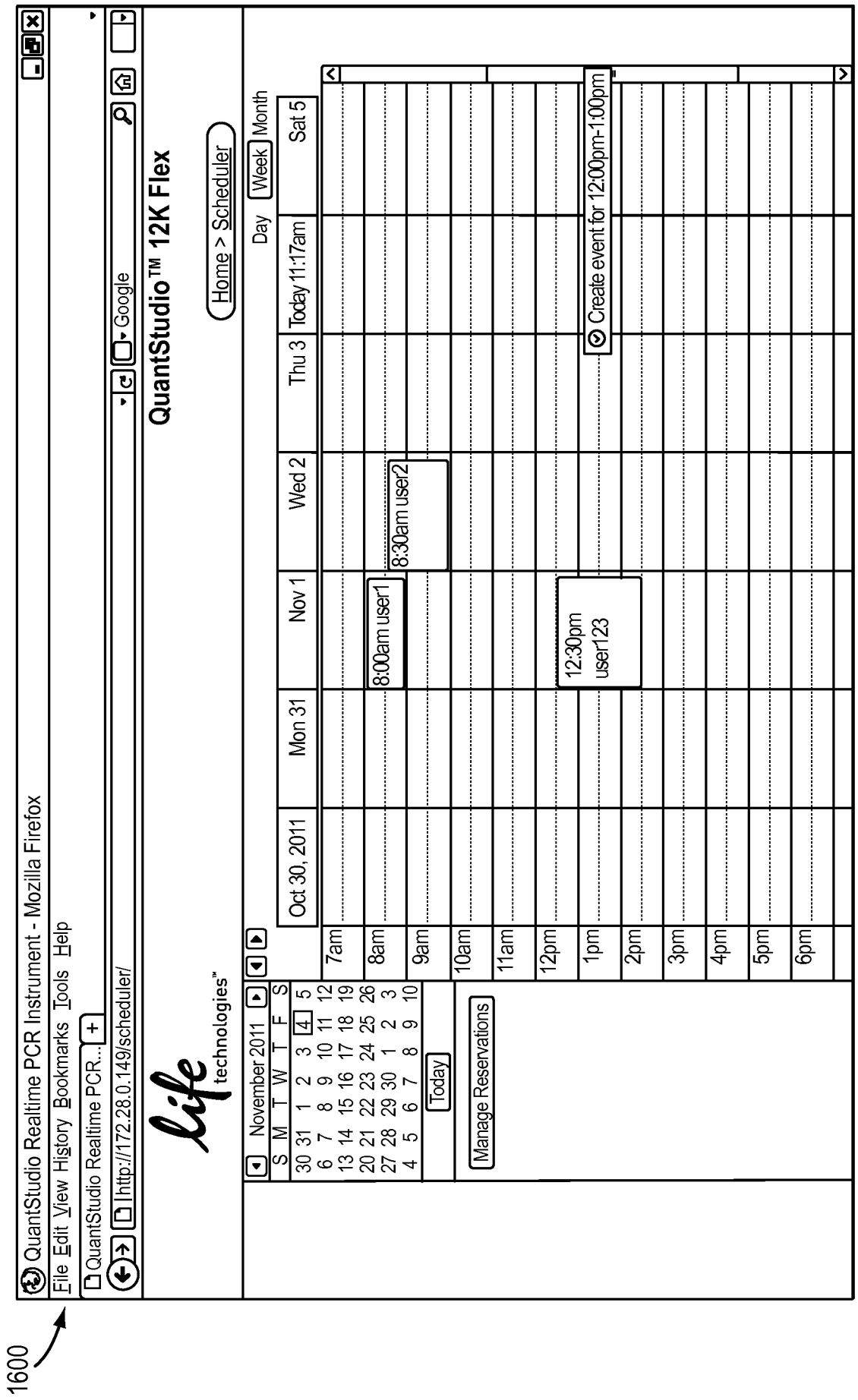
1600
QuantStudio Realtime PCR Instrument - Mozilla Firefox
File Edit View History Bookmarks Tools Help
QuantStudio Realtime PCR...
http://172.28.0.149/scheduler/
Google
QuantStudio™ 12K Flex
life technologies™
Home > Scheduler
Day Week Month
November 2011
Today
Manage Reservations
Oct 30, 2011
Mon 31
Nov 1
Wed 2
Thu 3
Today 11:17am
Sat 5
8:00am user1
8:30am user2
12:30pm user123
Create event for 12:00pm-1:00pm

FIG. 16

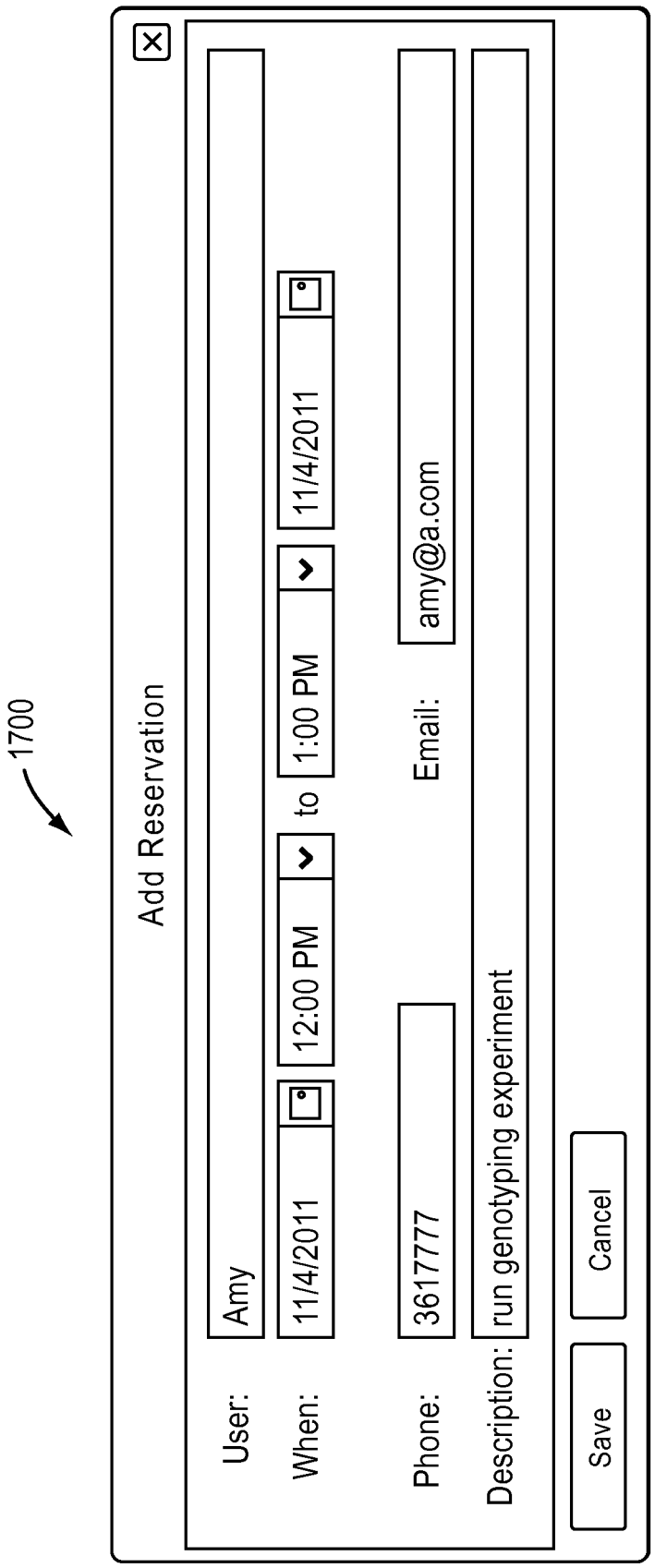
1700
Add Reservation
User:
Amy
When:
11/4/2011
12:00 PM
to
1:00 PM
11/4/2011
Phone:
3617777
Email:
amy@a.com
Description:
run genotyping experiment
Save
Cancel

FIG. 17