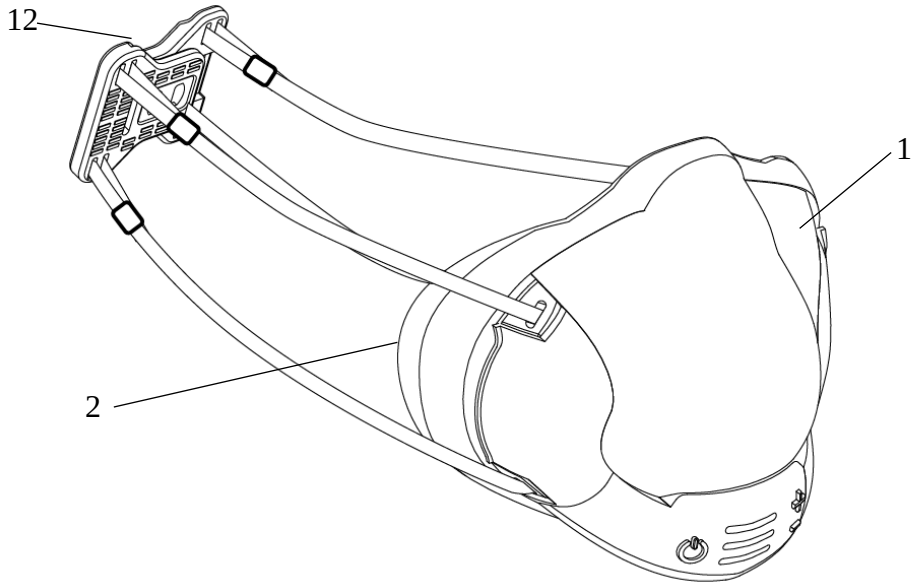

Fig. 1

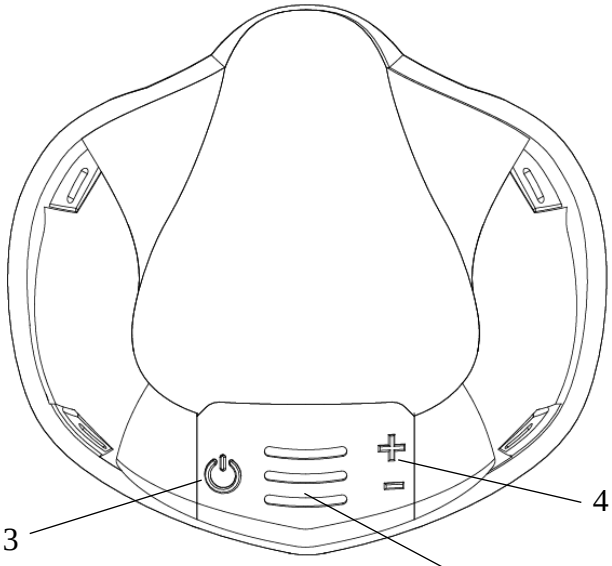

Fig. 2

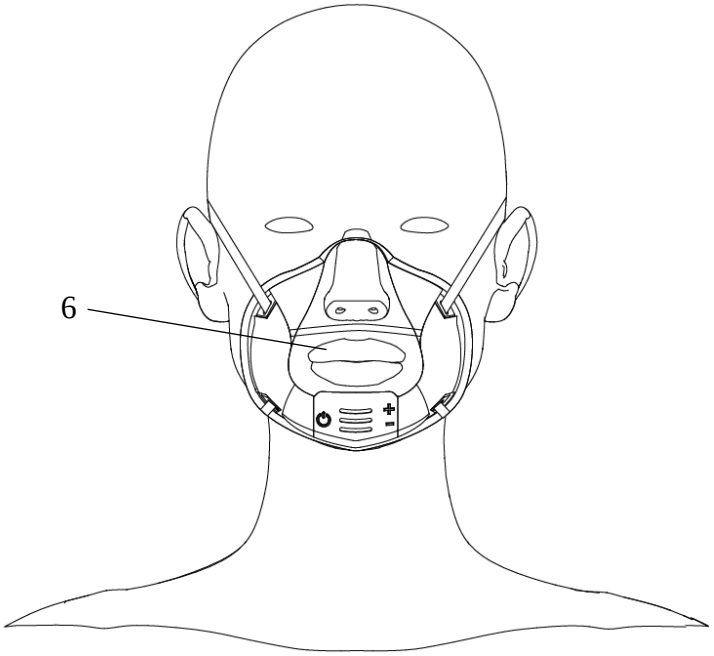

Fig. 3

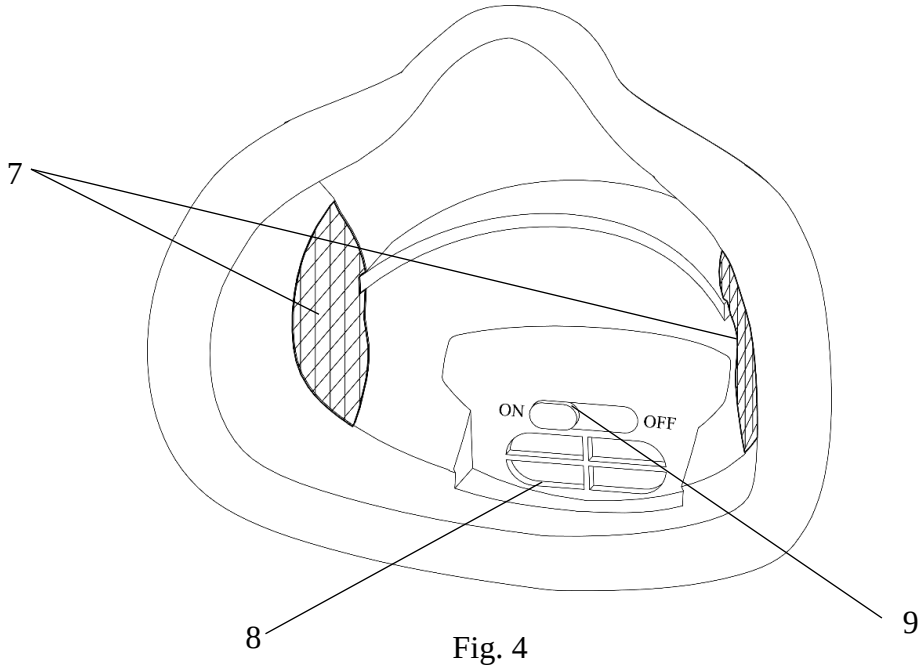

Fig. 4

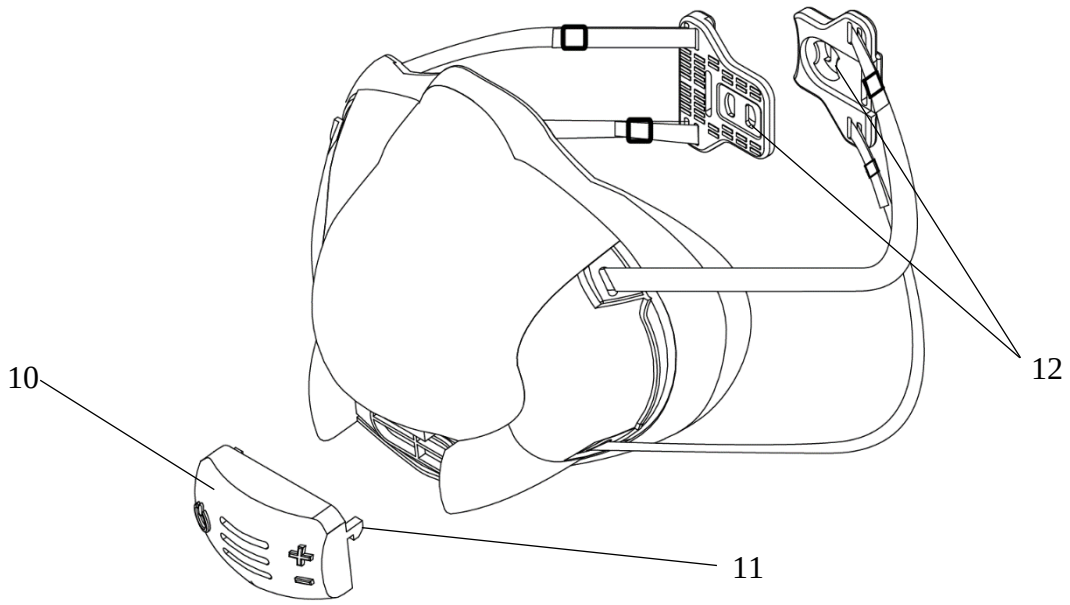

Fig. 5

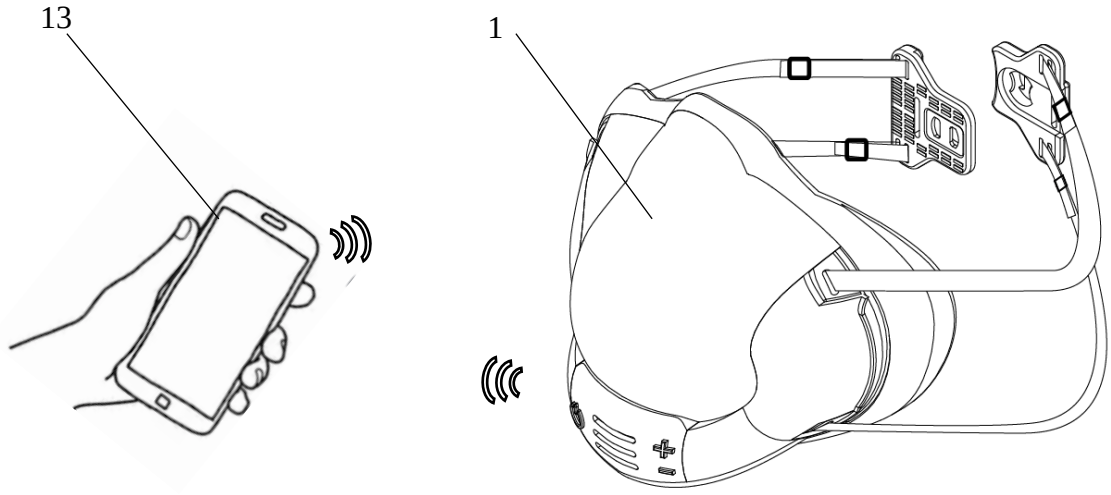

Fig. 6

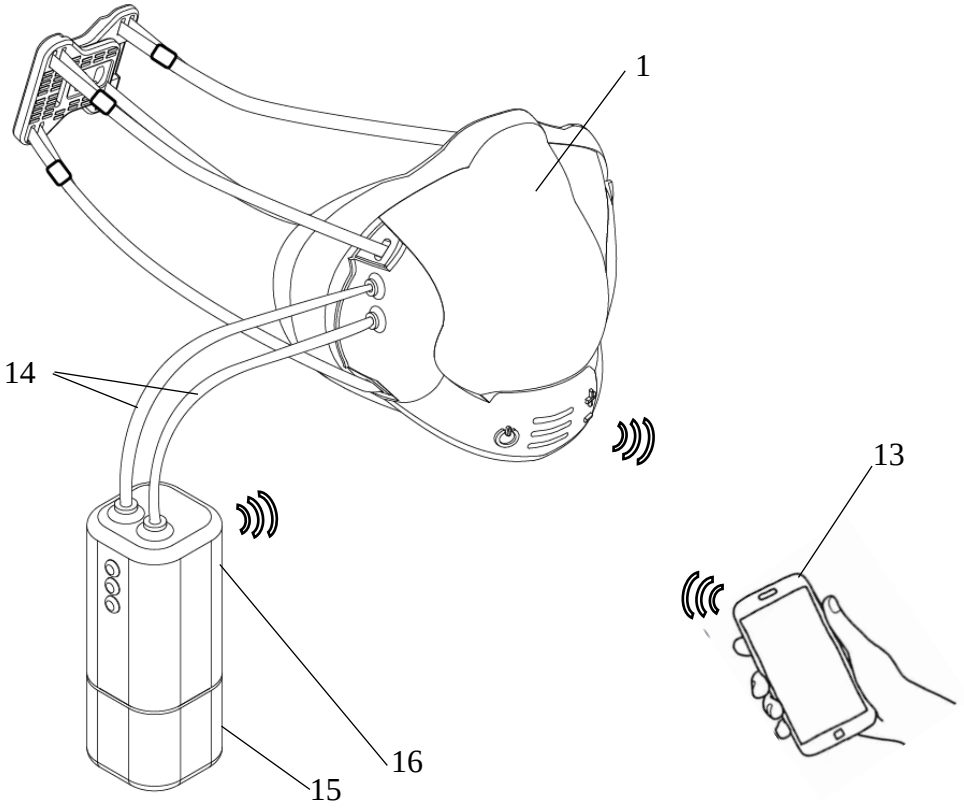

Fig. 7

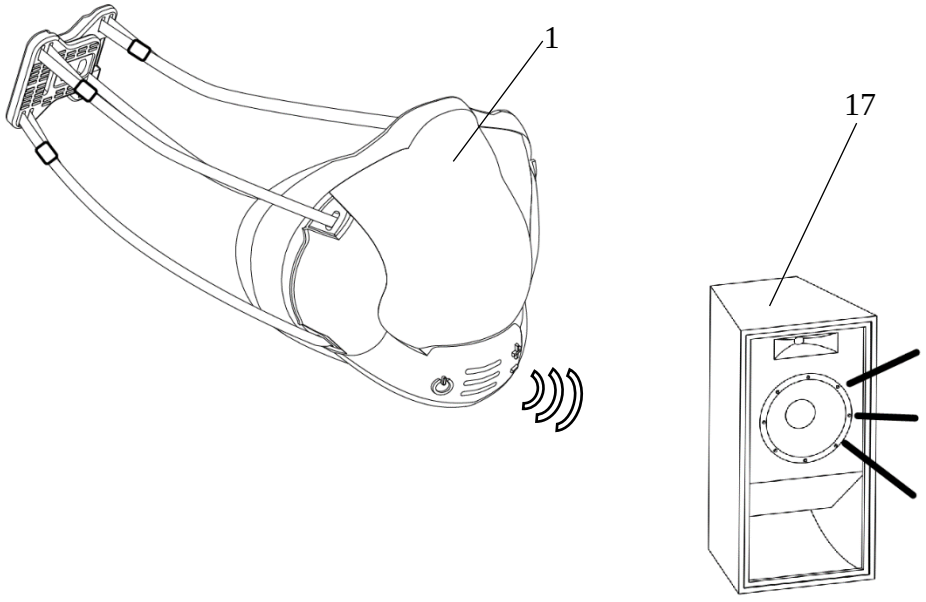

Fig. 8

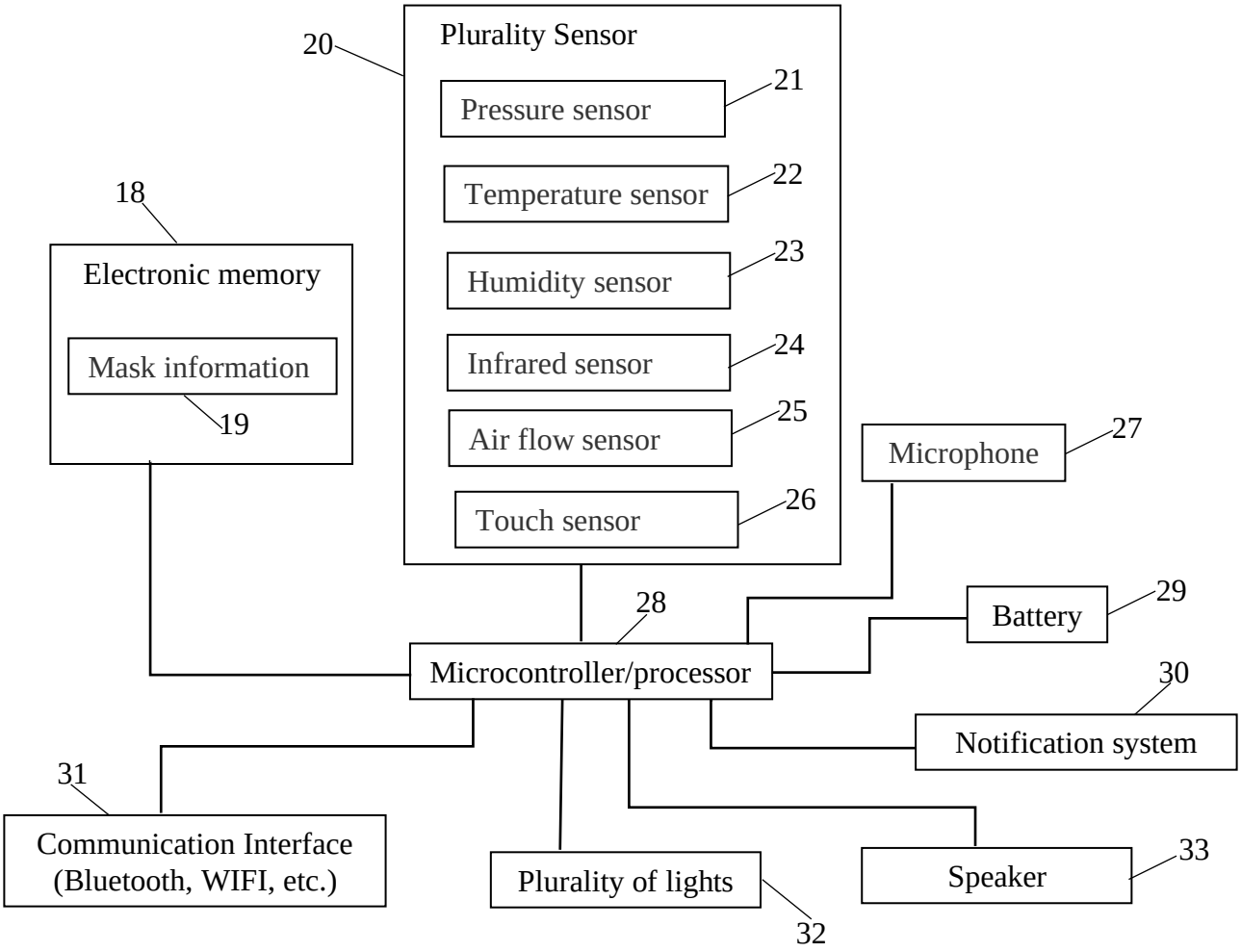
Plurality Sensor
20
Pressure sensor
21
Temperature sensor
22
Humidity sensor
23
Infrared sensor
24
Air flow sensor
25
Touch sensor
26
18
Electronic memory
Mask information
19
Microphone
27
28
Battery
29
Microcontroller/processor
30
Notification system
31
Communication Interface
(Bluetooth, WIFI, etc.)
Plurality of lights
32
Speaker
33

FIG. 9

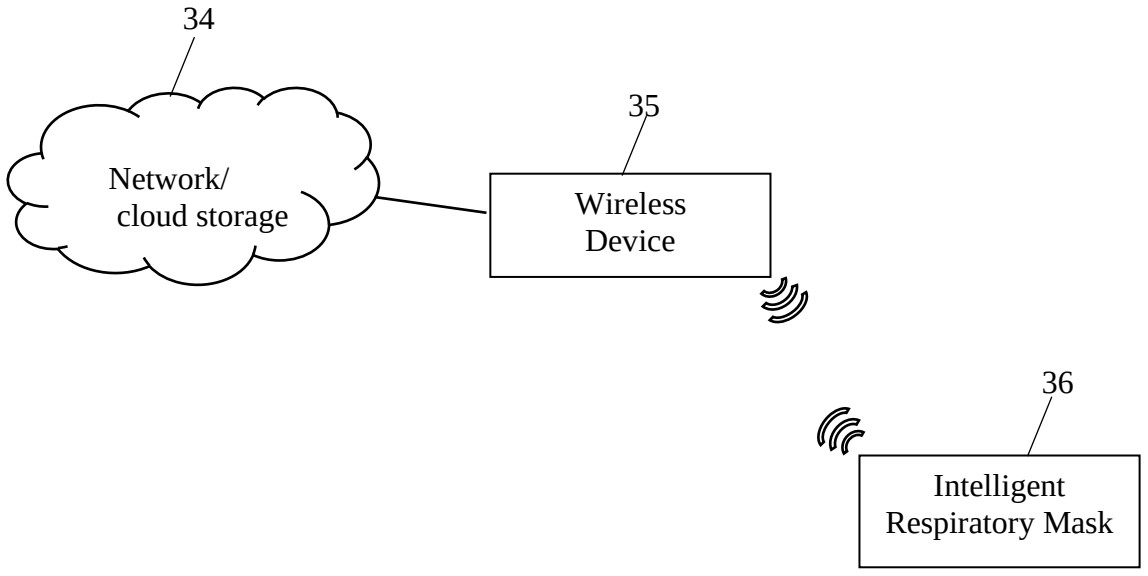
34
Network/
cloud storage
35
Wireless
Device
36
Intelligent
Respiratory Mask

Fig. 10