(12) INTERNATIONAL APPLICATION PUBLISHED UNDER THE PATENT COOPERATION TREATY (PCT)

(19) World Intellectual Property Organization
International Bureau

(43) International Publication Date
3 March 2005 (03.03.2005)

PCT

(10) International Publication Number
WO 2005/018955 A1

(51) International Patent Classification[7]: B60B 31/02, 29/00

(21) International Application Number: PCT/KR2003/002671

(22) International Filing Date: 5 December 2003 (05.12.2003)

(25) Filing Language: English

(26) Publication Language: English

(30) Priority Data:
20-2003-0026803 20 August 2003 (20.08.2003) KR
20-2003-0026804 20 August 2003 (20.08.2003) KR

(71) Applicant *(for all designated States except US)*: **IM, Chul-Soon** [KR/KR]; Bundang-dong 120-4, Bundang-gu, Seongnam-si, Gyeonggi-do 463-832 (KR).

(72) Inventor; and

(75) Inventor/Applicant *(for US only)*: **KIM, Jong-Sook** [KR/KR]; Bundang-dong 120-4, Bundang-gu, Seongnam-si, Gyeonggi-do 463-832 (KR).

(74) Agent: **KIM, Jong-Yoon**; 2nd Floor, Sangwon Building 636-15,, Yeoksam-1dong, Gangnam-gu, Seoul 135-908 (KR).

(81) Designated States *(national)*: AE, AG, AL, AM, AT, AU, AZ, BA, BB, BG, BR, BY, BZ, CA, CH, CN, CO, CR, CU, CZ, DE, DK, DM, DZ, EC, EE, ES, FI, GB, GD, GE, GH, GM, HR, HU, ID, IL, IN, IS, JP, KE, KG, KP, KZ, LC, LK, LR, LS, LT, LU, LV, MA, MD, MG, MK, MN, MW, MX, MZ, NI, NO, NZ, OM, PH, PL, PT, RO, RU, SC, SD, SE, SG, SK, SL, TJ, TM, TN, TR, TT, TZ, UA, UG, US, UZ, VC, VN, YU, ZA, ZM, ZW.

(84) Designated States *(regional)*: ARIPO patent (BW, GH, GM, KE, LS, MW, MZ, SD, SL, SZ, TZ, UG, ZM, ZW), Eurasian patent (AM, AZ, BY, KG, KZ, MD, RU, TJ, TM), European patent (AT, BE, BG, CH, CY, CZ, DE, DK, EE, ES, FI, FR, GB, GR, HU, IE, IT, LU, MC, NL, PT, RO, SE, SI, SK, TR), OAPI patent (BF, BJ, CF, CG, CI, CM, GA, GN, GQ, GW, ML, MR, NE, SN, TD, TG).

**Published:**
— *with international search report*

*[Continued on next page]*

(54) Title: GUARD DEVICE FOR ESCALATOR HANDRAIL

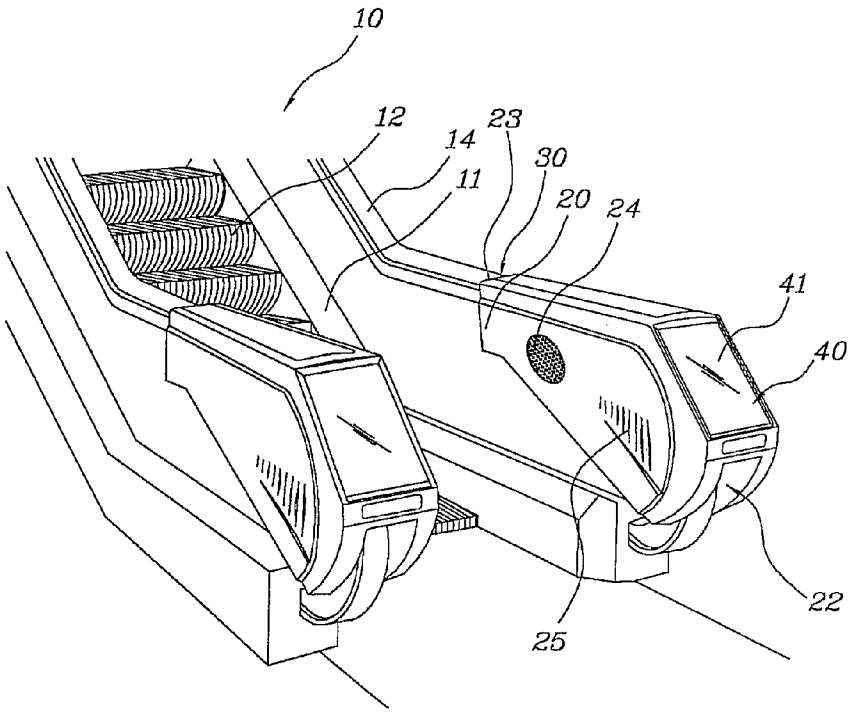


(57) Abstract: A guard device (20) for a handrail in an entry zone of an escalator is disclosed, having a guide channel (21) at its bottom to receive a part of the handrail (14). The guard device includes advertising display (40) on its front face, a sterilisation unit (30) and an air cleaning unit (50) provided at a side wall thereof.

WO 2005/018955 A1

*For two-letter codes and other abbreviations, refer to the "Guidance Notes on Codes and Abbreviations" appearing at the beginning of each regular issue of the PCT Gazette.*