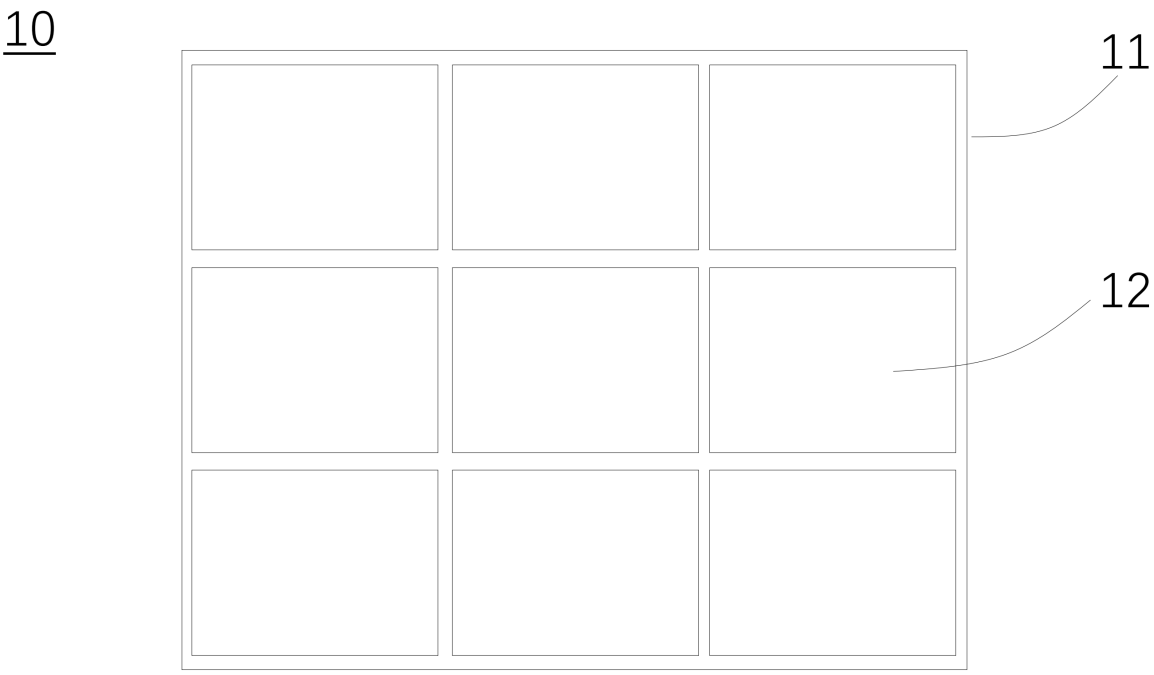

FIG. 1A

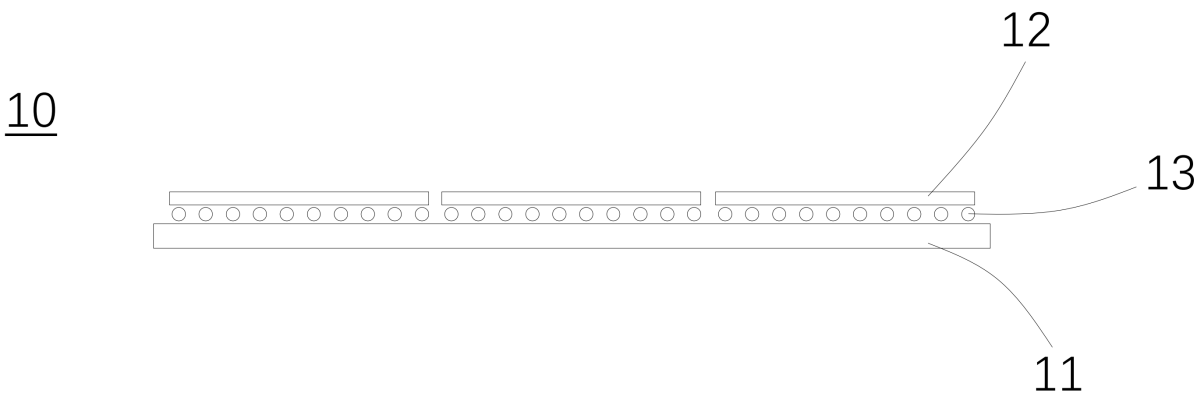

FIG. 1B

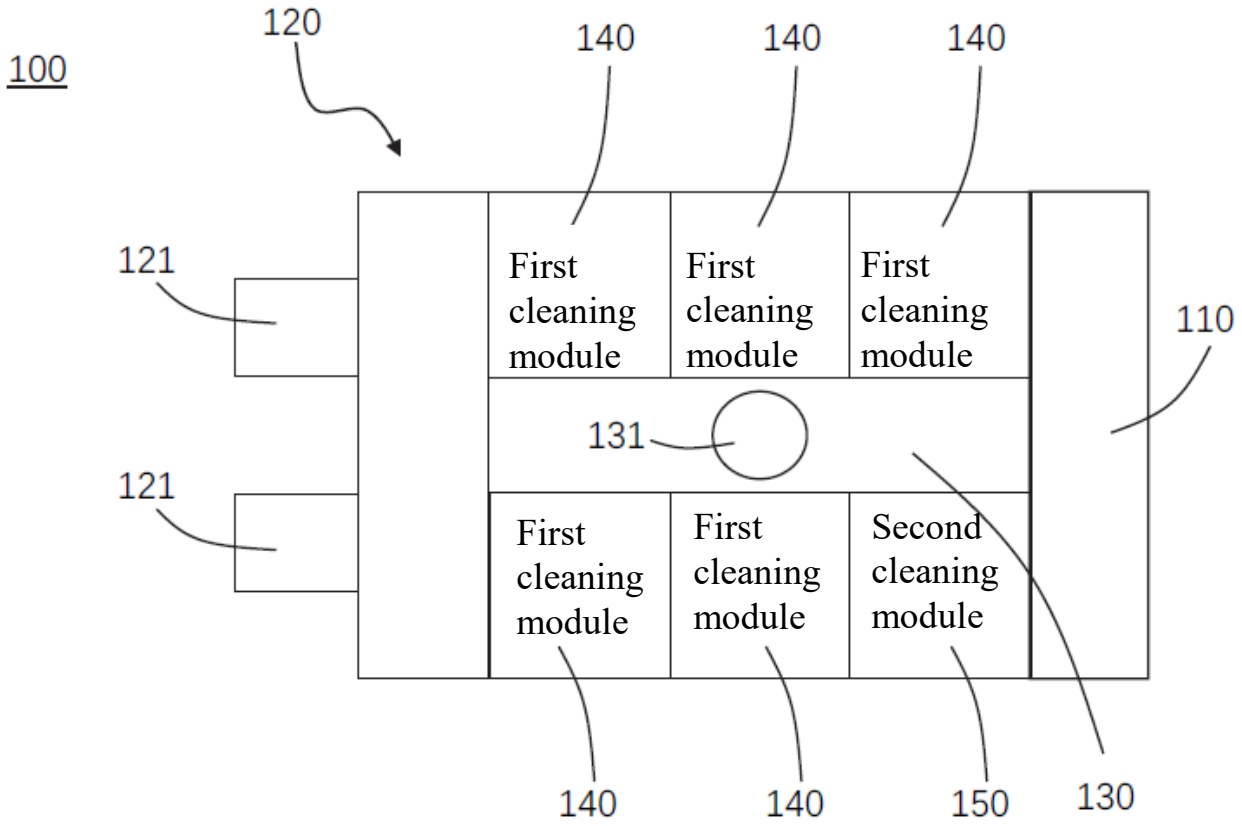
100
120
140
140
140
121
First cleaning module
First cleaning module
First cleaning module
110
131
121
First cleaning module
First cleaning module
Second cleaning module
140
140
150
130

FIG. 2

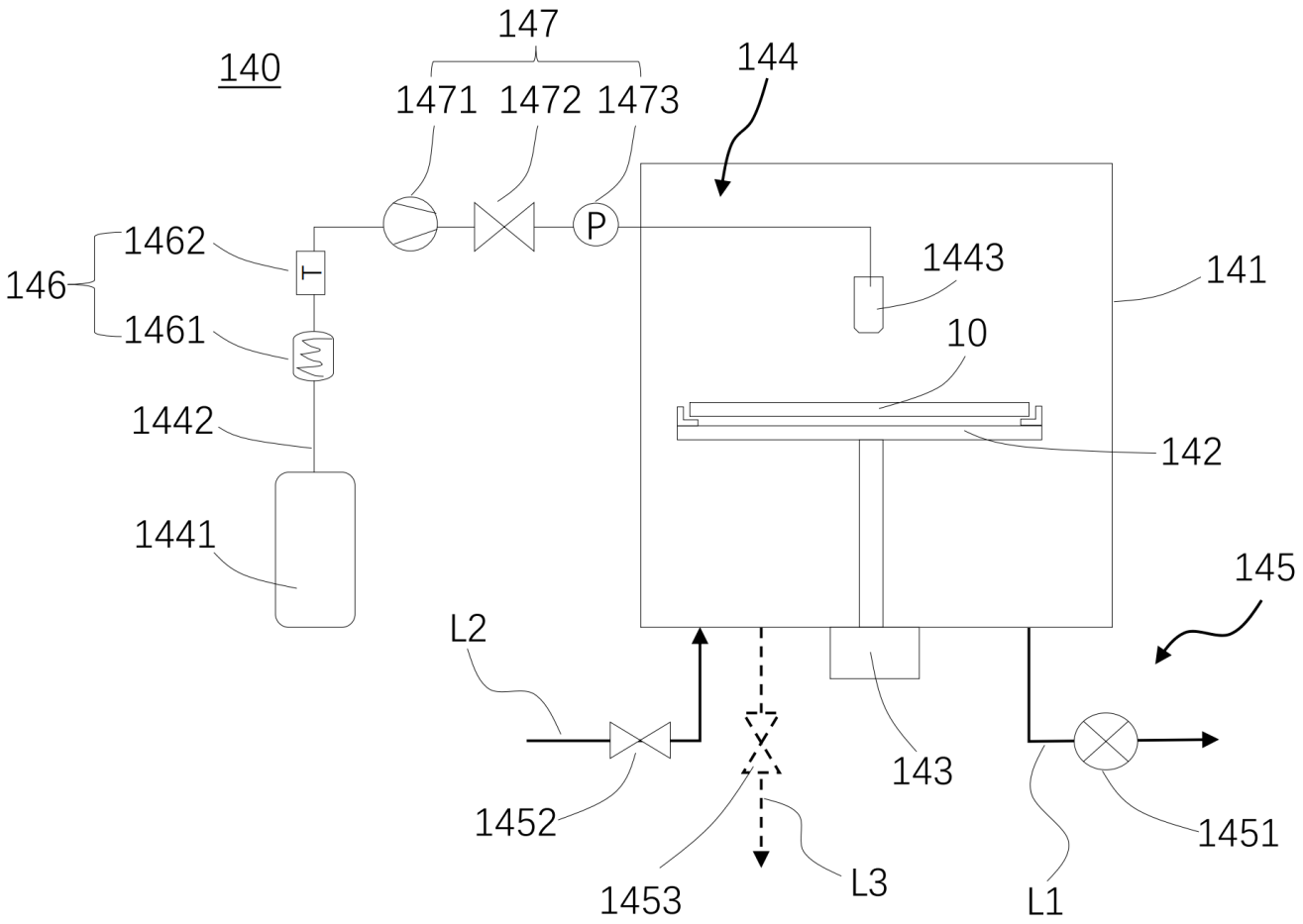
147
140
144
1471
1472
1473
P
1462
T
146
1461
1443
141
10
1442
142
1441
145
L2
143
1452
1451
1453
L3
L1

FIG. 3

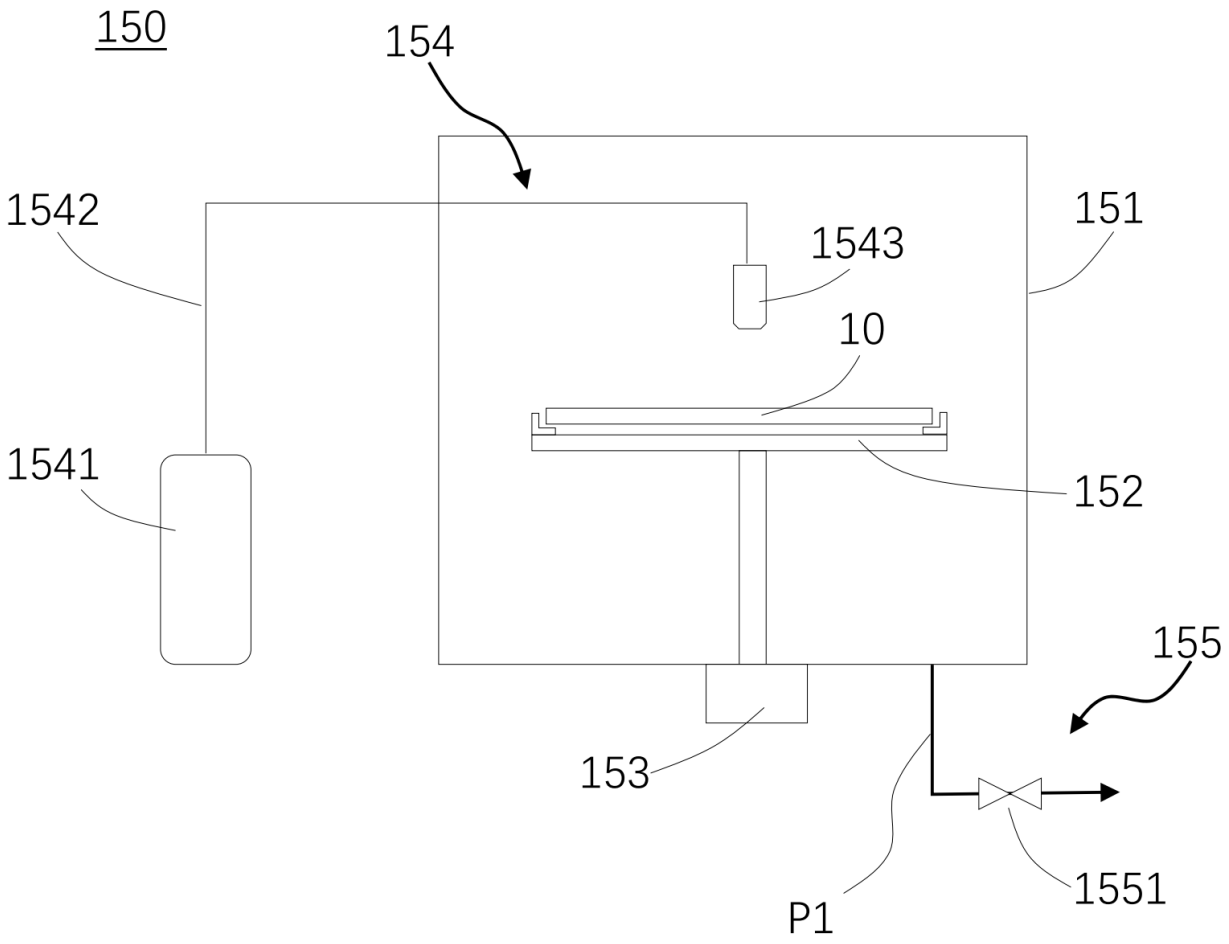

FIG. 4

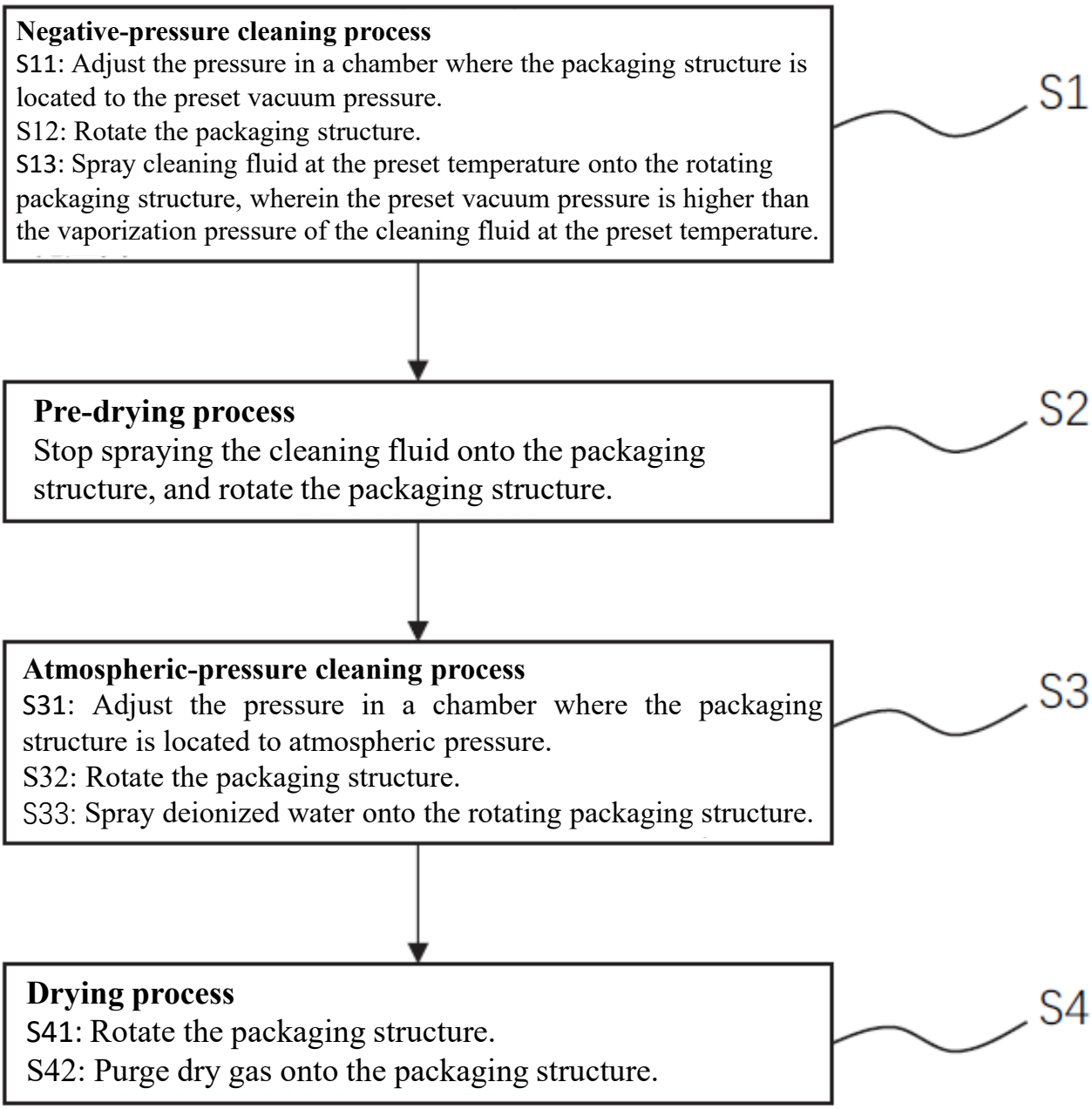
Negative-pressure cleaning process
S11: Adjust the pressure in a chamber where the packaging structure is located to the preset vacuum pressure.
S12: Rotate the packaging structure.
S13: Spray cleaning fluid at the preset temperature onto the rotating packaging structure, wherein the preset vacuum pressure is higher than the vaporization pressure of the cleaning fluid at the preset temperature.
S1
Pre-drying process
Stop spraying the cleaning fluid onto the packaging structure, and rotate the packaging structure.
S2
Atmospheric-pressure cleaning process
S31: Adjust the pressure in a chamber where the packaging structure is located to atmospheric pressure.
S32: Rotate the packaging structure.
S33: Spray deionized water onto the rotating packaging structure.
S3
Drying process
S41: Rotate the packaging structure.
S42: Purge dry gas onto the packaging structure.
S4

FIG. 5

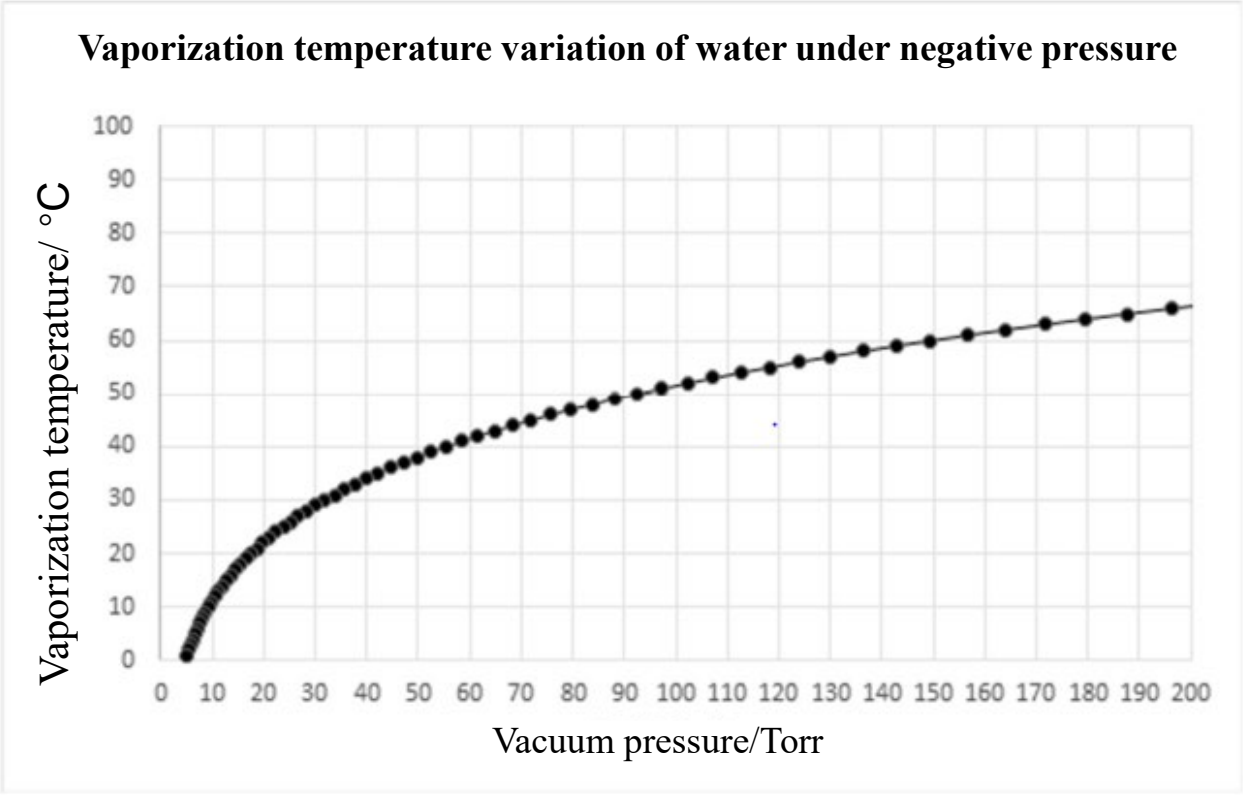
Vaporization temperature variation of water under negative pressure
Vaporization temperature/ °C
100
90
80
70
60
50
40
30
20
10
0
0 10 20 30 40 50 60 70 80 90 100 110 120 130 140 150 160 170 180 190 200
Vacuum pressure/Torr

FIG. 6

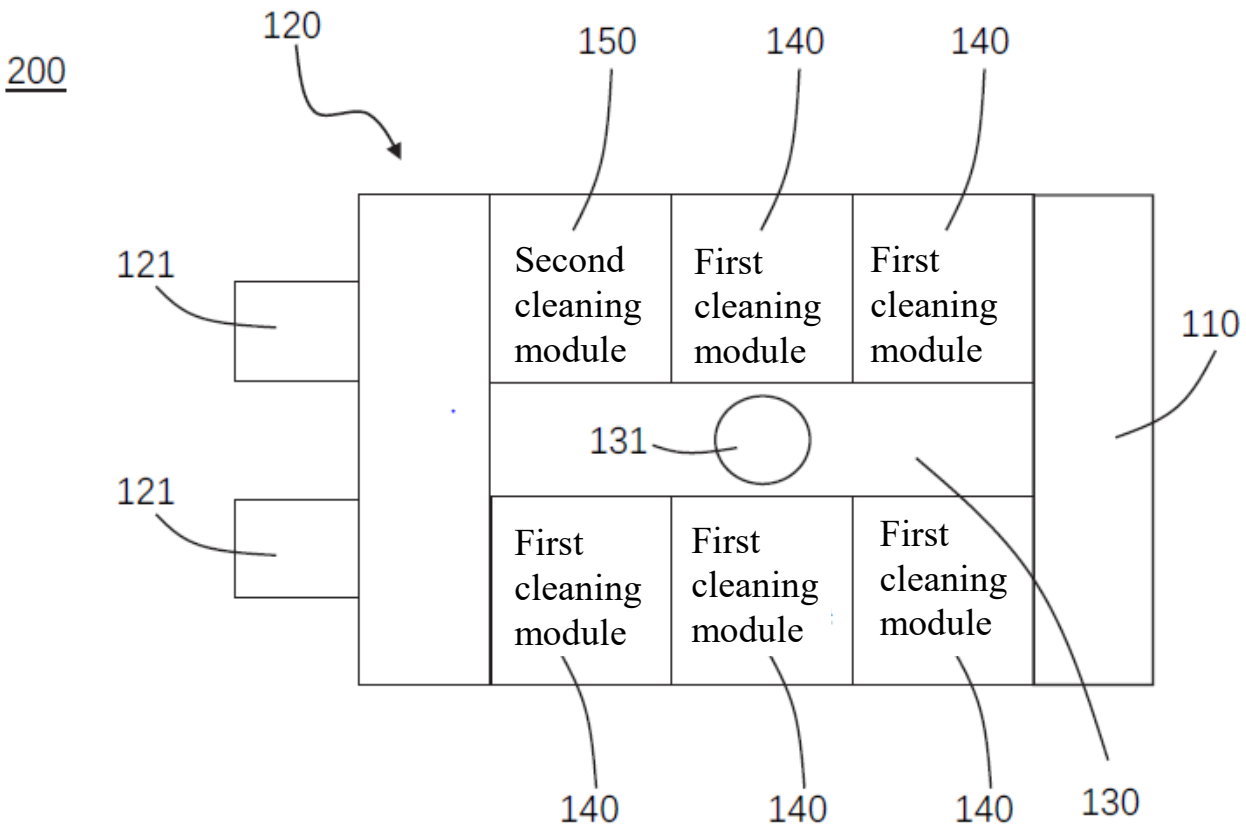
200
120
150
140
140
121
Second cleaning module
First cleaning module
First cleaning module
110
131
121
First cleaning module
First cleaning module
First cleaning module
140
140
140
130

FIG. 7

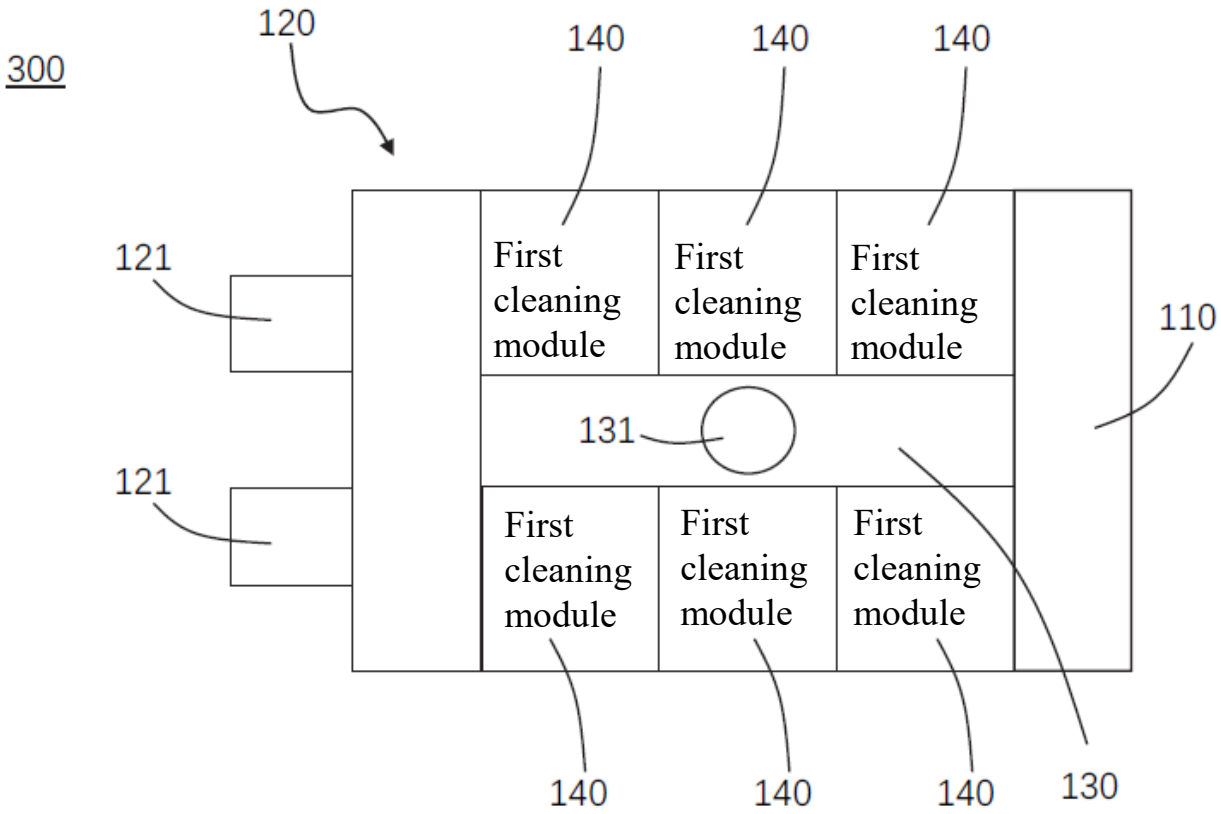
300
120
140
140
140
121
First cleaning module
First cleaning module
First cleaning module
110
131
121
First cleaning module
First cleaning module
First cleaning module
140
140
140
130

FIG. 8

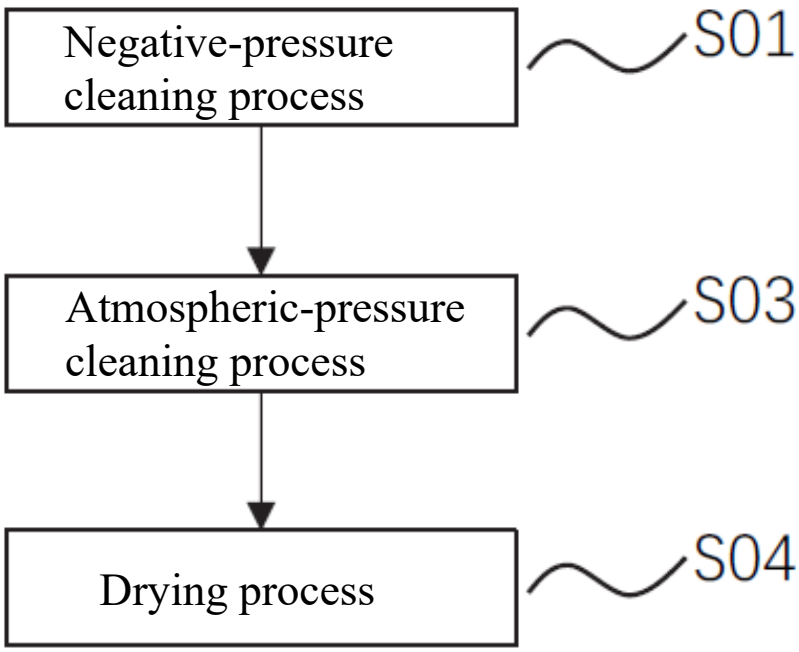
Negative-pressure cleaning process
S01
Atmospheric-pressure cleaning process
S03
Drying process
S04

FIG. 9