FIG. 3

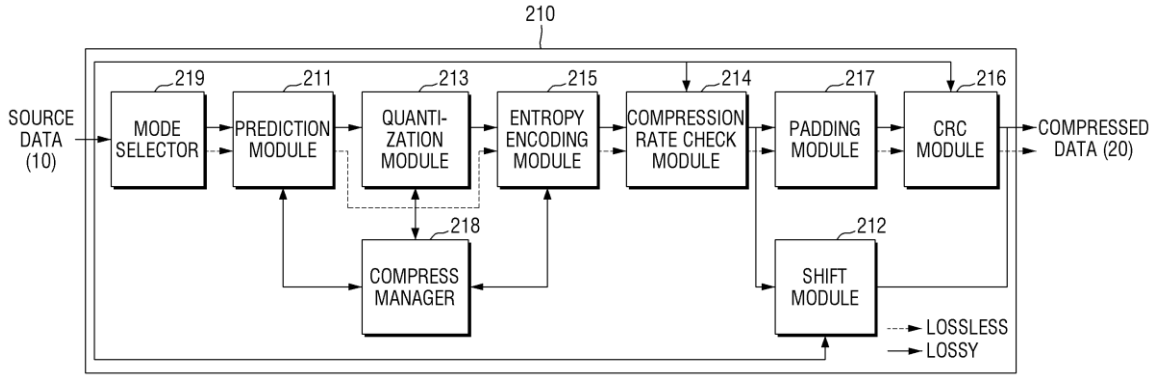
210
SOURCE DATA (10)
MODE SELECTOR
219
PREDICTION MODULE
211
QUANTI-ZATION MODULE
213
ENTROPY ENCODING MODULE
215
COMPRESSION RATE CHECK MODULE
214
PADDING MODULE
217
CRC MODULE
216
COMPRESSED DATA (20)
COMPRESS MANAGER
218
SHIFT MODULE
212
LOSSLESS
LOSSY

FIG. 4

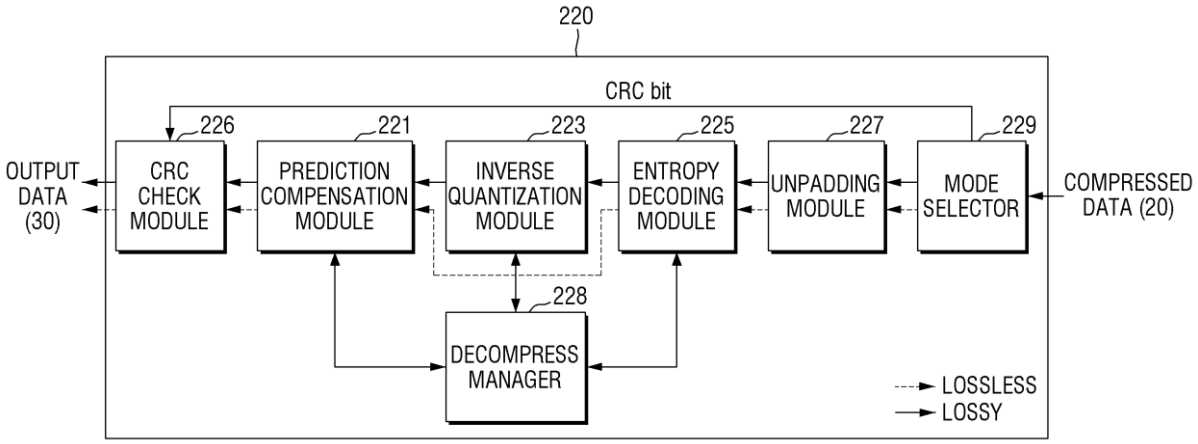
220
CRC bit
OUTPUT DATA (30)
CRC CHECK MODULE
226
PREDICTION COMPENSATION MODULE
221
INVERSE QUANTIZATION MODULE
223
ENTROPY DECODING MODULE
225
UNPADDING MODULE
227
MODE SELECTOR
229
COMPRESSED DATA (20)
DECOMPRESS MANAGER
228
LOSSLESS
LOSSY