(12) INTERNATIONAL APPLICATION PUBLISHED UNDER THE PATENT COOPERATION TREATY (PCT)

(19) World Intellectual Property Organization
International Bureau

(43) International Publication Date
19 August 2010 (19.08.2010)

PCT

(10) International Publication Number
WO 2010/092350 A3

(51) **International Patent Classification**:
*E21B 33/14* (2006.01) *E21B 34/14* (2006.01)
*E21B 33/16* (2006.01)

(21) **International Application Number**:
PCT/GB2010/000257

(22) **International Filing Date**:
12 February 2010 (12.02.2010)

(25) **Filing Language**: English

(26) **Publication Language**: English

(30) **Priority Data**:
12/371,374 13 February 2009 (13.02.2009) US

(71) **Applicant** *(for all designated States except US)*: **HALLIBURTON ENERGY SERVICES, INC.** [US/US]; P.O. Box 1431, Duncan, OK 73536 (US).

(71) **Applicant** *(for MW only)*: **TURNER, Craig, Robert** [GB/GB]; A A Thornton & Co, 235 High Holborn, London WC1V 7LE (GB).

(72) **Inventors; and**

(75) **Inventors/Applicants** *(for US only)*: **MAKOWIECKI, Gary, J.** [US/US]; 1103 North 12th Street, Duncan, OK 73533 (US). **SMITH, Donald** [US/US]; 23801 US Highway 70, Wilson, OK 73463 (US). **WINSLOW, Donald, Wayne** [US/US]; 2206 Twin Drive, Duncan, OK 73533 (US). **ACOSTA, Frank, V.** [US/US]; 2401 Meadowview Drive, Duncan, OK 73533 (US).

(74) **Agents**: **TURNER, Craig, Robert** et al.; A A Thornton & Co, 235 High Holborn, London WC1V 7LE (GB).

(81) **Designated States** *(unless otherwise indicated, for every kind of national protection available)*: AE, AG, AL, AM, AO, AT, AU, AZ, BA, BB, BG, BH, BR, BW, BY, BZ, CA, CH, CL, CN, CO, CR, CU, CZ, DE, DK, DM, DO, DZ, EC, EE, EG, ES, FI, GB, GD, GE, GH, GM, GT, HN, HR, HU, ID, IL, IN, IS, JP, KE, KG, KM, KN, KP, KR, KZ, LA, LC, LK, LR, LS, LT, LU, LY, MA, MD, ME, MG, MK, MN, MW, MX, MY, MZ, NA, NG, NI, NO, NZ, OM, PE, PG, PH, PL, PT, RO, RS, RU, SC, SD, SE, SG, SK, SL, SM, ST, SV, SY, TH, TJ, TM, TN, TR, TT, TZ, UA, UG, US, UZ, VC, VN, ZA, ZM, ZW.

(84) **Designated States** *(unless otherwise indicated, for every kind of regional protection available)*: ARIPO (BW, GH, GM, KE, LS, MW, MZ, NA, SD, SL, SZ, TZ, UG, ZM, ZW), Eurasian (AM, AZ, BY, KG, KZ, MD, RU, TJ, TM), European (AT, BE, BG, CH, CY, CZ, DE, DK, EE, ES, FI, FR, GB, GR, HR, HU, IE, IS, IT, LT, LU, LV, MC, MK, MT, NL, NO, PL, PT, RO, SE, SI, SK, SM, TR), OAPI (BF, BJ, CF, CG, CI, CM, GA, GN, GQ, GW, ML, MR, NE, SN, TD, TG).

**Published**:

— *with international search report (Art. 21(3))*

— *before the expiration of the time limit for amending the claims and to be republished in the event of receipt of amendments (Rule 48.2(h))*

(88) **Date of publication of the international search report**:
14 October 2010

(54) **Title**: STAGE CEMENTING TOOL

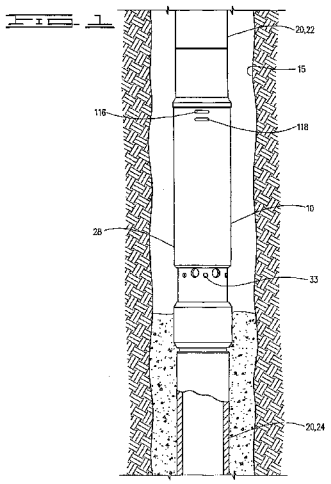


(57) **Abstract**: A cementing tool for use in a well has a housing and a closing sleeve received thereabout. An operating sleeve is received in the housing and is interconnected with the closing sleeve so that movement in the operating sleeve will cause the closing sleeve to move. The closing sleeve is detachably connected to the housing and is movable from the first or open position to a second or closed position in which it covers cementing ports defined in the housing. The tool has a plurality of lock rings that are moved with the closing sleeve. A plurality of locking grooves are adapted to receive the lock rings such that the engagement of any of the lock rings with any of the locking grooves will prevent the closing sleeve from moving out of the closed position.

WO 2010/092350 A3