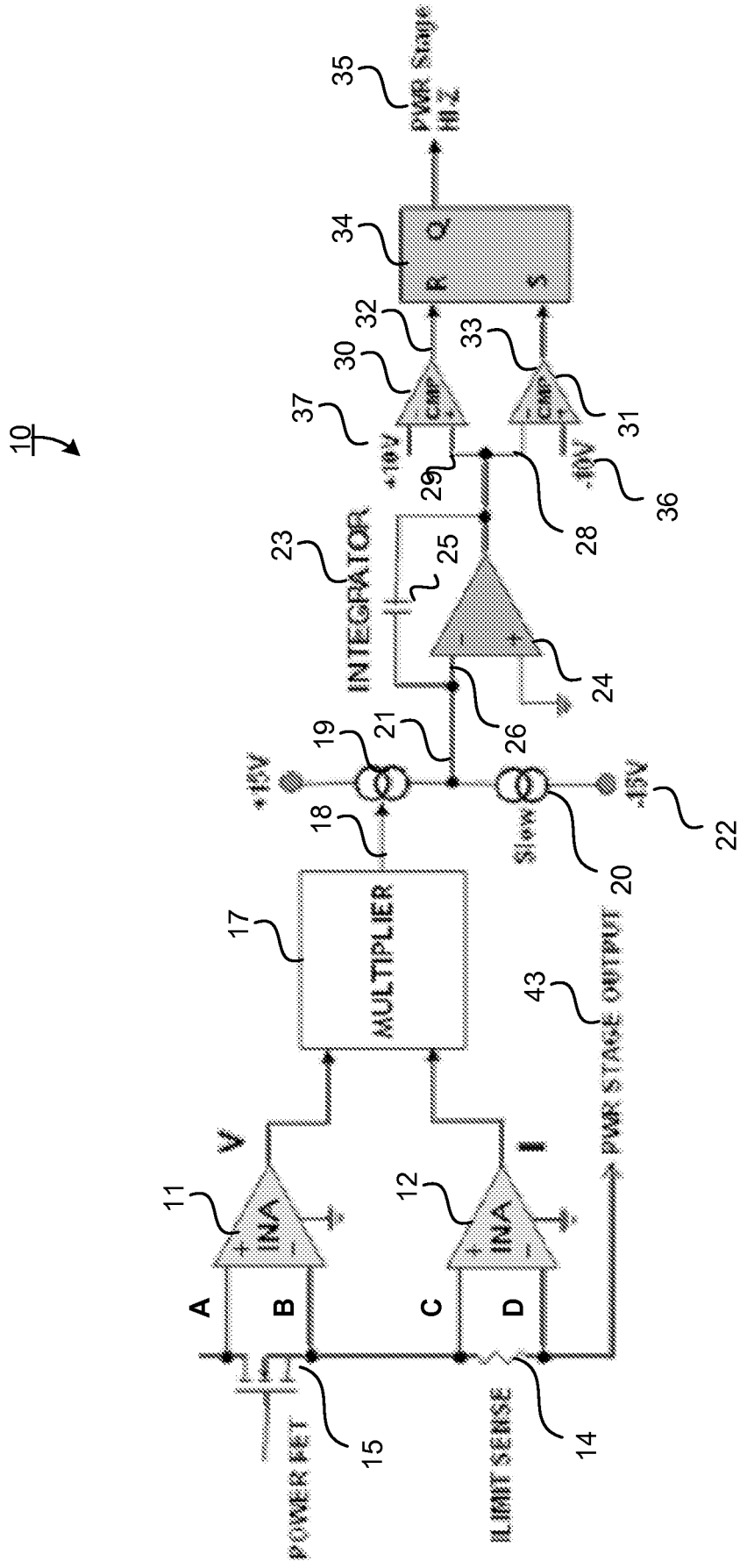
10
POWER FET
ILIMIT SENSE
A
B
C
D
INA
INA
V
I
11
12
15
14
MULTIPLIER
17
18
19
20
21
22
+15V
-15V
Slow
INTEGRATOR
23
24
25
26
28
29
30
31
32
33
34
35
36
37
CMP
CMP
+10V
-10V
R
S
Q
PWR Stage HI-Z
43
PWR STAGE OUTPUT

FIG. 1

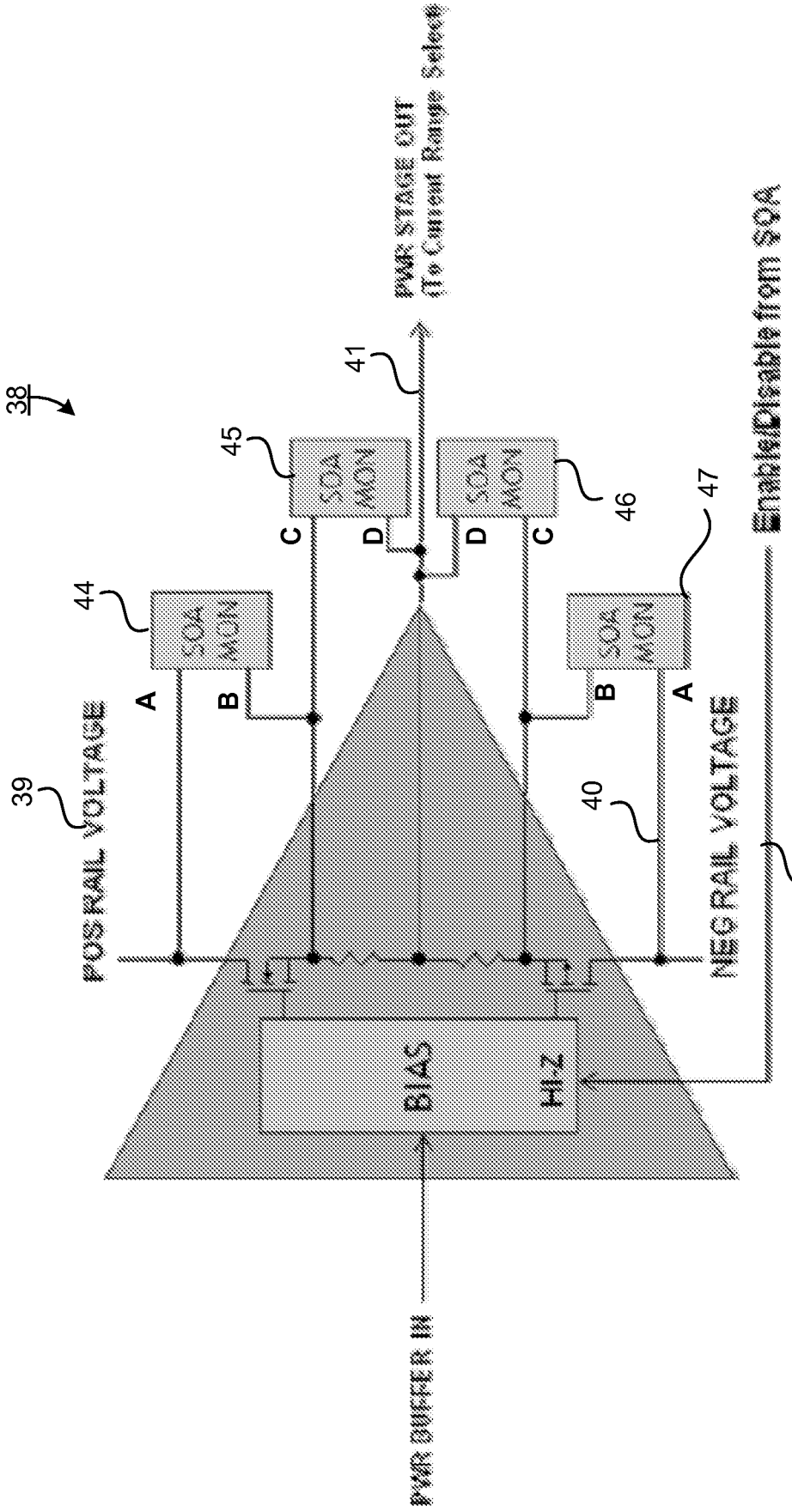
38
PWR STAGE OUT
(To Current Range Select)
41
45
SOA MON
C
D
46
SOA MON
D
C
44
SOA MON
A
B
47
SOA MON
B
A
39
POS RAIL VOLTAGE
40
NEG RAIL VOLTAGE
Enable/Disable from SOA
42
BIAS
HiZ
PWR BUFFER IN

FIG 2

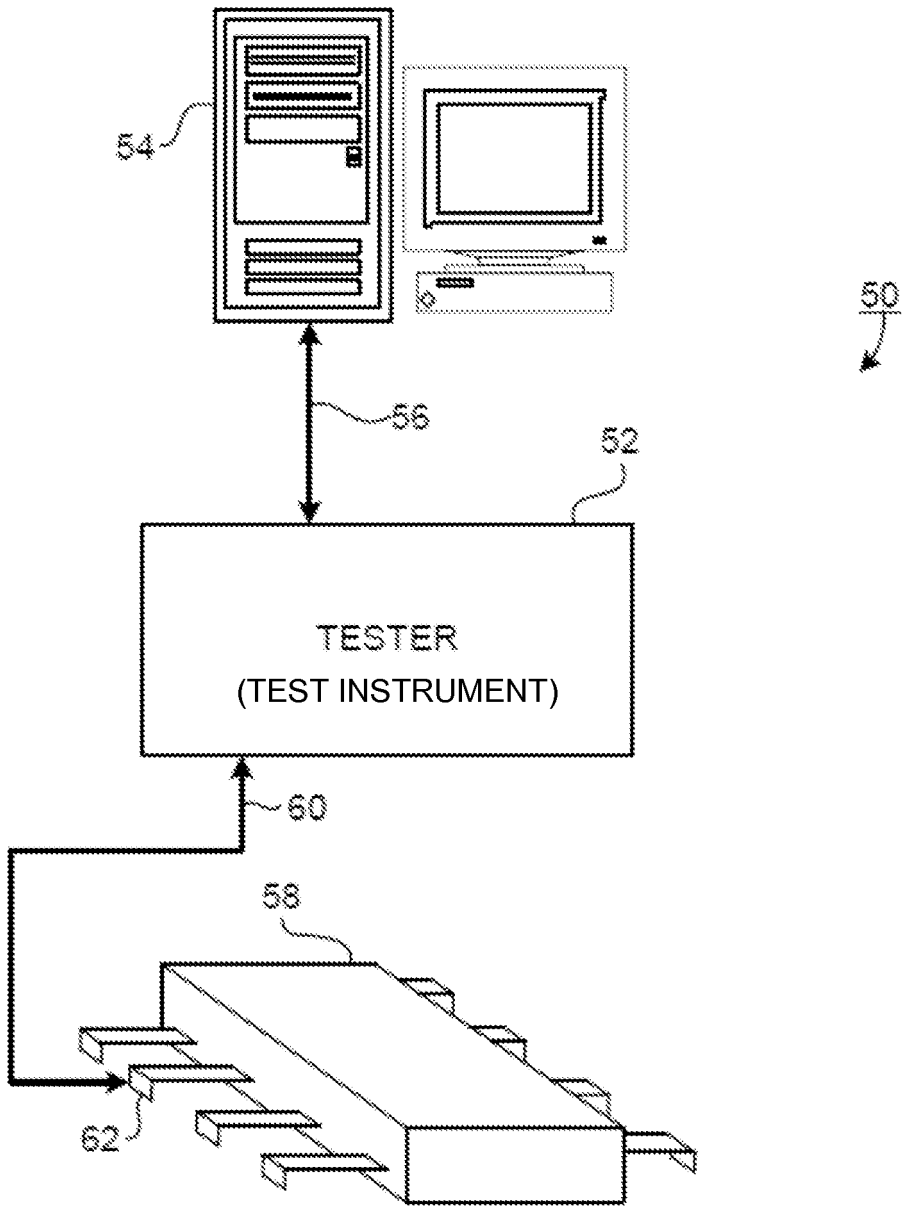

FIG. 3

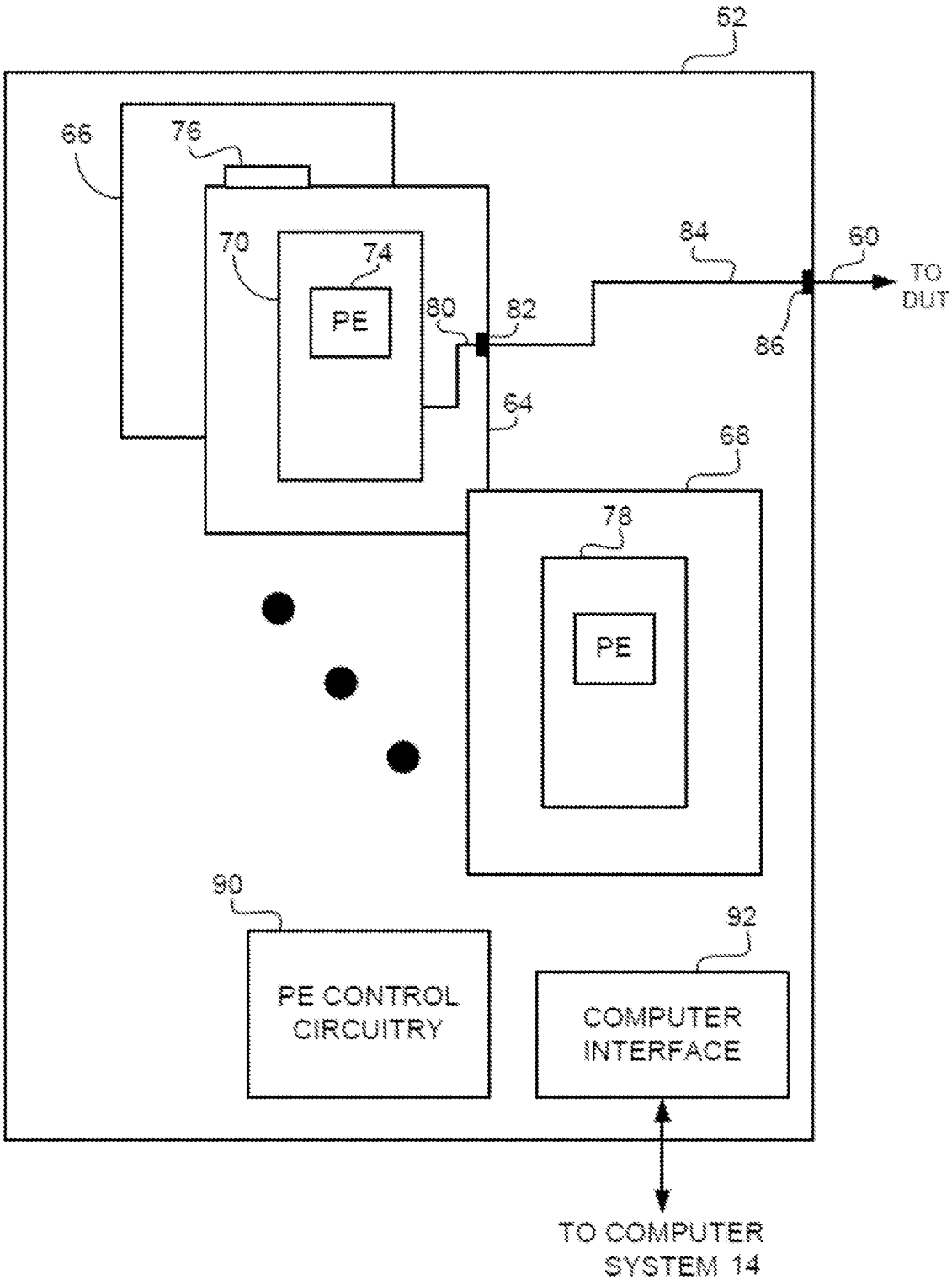
52
66
76
70
74
PE
80
82
84
60
TO DUT
86
64
68
78
PE
90
PE CONTROL CIRCUITRY
92
COMPUTER INTERFACE
TO COMPUTER SYSTEM 14

FIG. 4