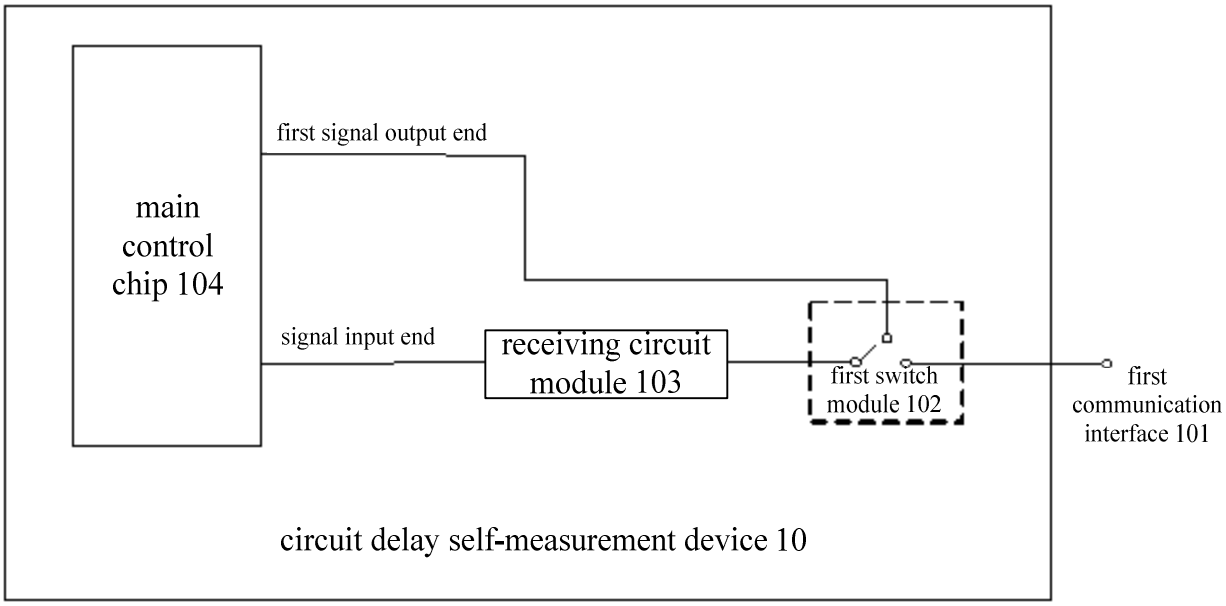

Fig. 9

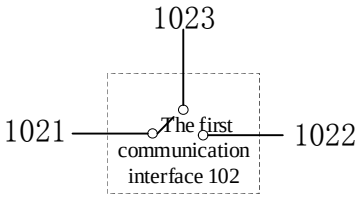

Fig. 10

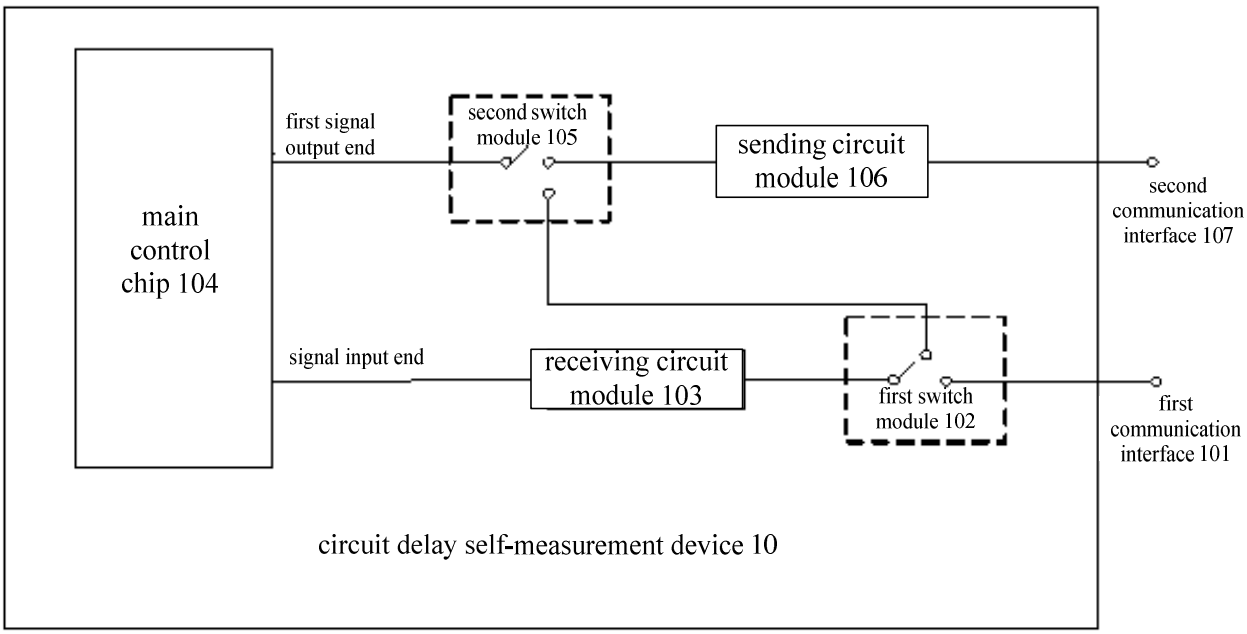

Fig. 11

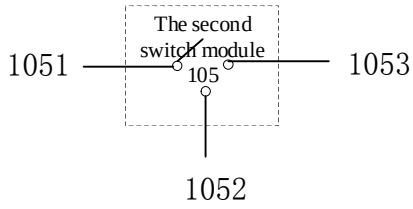
The second
switch module
105
1051
1053
1052

Fig. 12

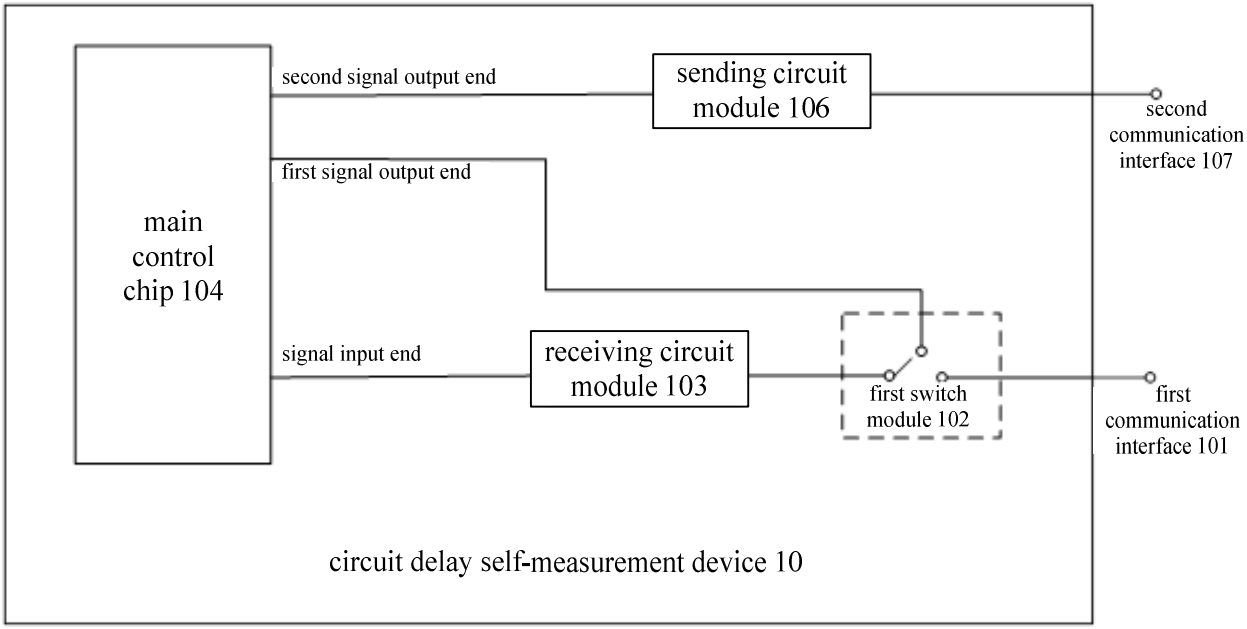
main
control
chip 104
second signal output end
sending circuit
module 106
second
communication
interface 107
first signal output end
signal input end
receiving circuit
module 103
first switch
module 102
first
communication
interface 101
circuit delay self-measurement device 10

Fig. 13