(12) INTERNATIONAL APPLICATION PUBLISHED UNDER THE PATENT COOPERATION TREATY (PCT)

(19) World Intellectual Property Organization
International Bureau

(43) International Publication Date
25 September 2025 (25.09.2025)

WIPO | PCT

(10) International Publication Number
WO 2025/199197 A1

(51) International Patent Classification:
G01R 1/06 (2006.01) *G01R 1/04* (2006.01)
G01R 1/067 (2006.01) *G01R 31/30* (2006.01)
G01R 1/44 (2006.01) *G31R 31/316* (2006.01)
G01R 31/28 (2006.01) *G31R 31/3163* (2006.01)
G01R 31/3161 (2006.01) *G31R 31/3167* (2006.01)
G01R 31/317 (2006.01) *G31R 31/3181* (2006.01)
G01R 31/3173 (2006.01) *G31R 31/319* (2006.01)
G01R 1/02 (2006.01)

(21) International Application Number:
PCT/US2025/020512

(22) International Filing Date:
19 March 2025 (19.03.2025)

(25) Filing Language: English

(26) Publication Language: English

(30) Priority Data:
202410323817.6 20 March 2024 (20.03.2024) CN

(71) Applicant: **SMITHS INTERCONNECT AMERICAS, INC.** [US/US]; 2001 NE 46th Street, Suite 188, Kansas City, Missouri 64116 (US).

(72) Inventors: **ZHANG, Long**; No. 14 Unit, No. 78 Xinglin Road, Suzhou SIP, Jiangsu 215026 (CN). **MU, Haiyan**; No. 1 #901, No. 18, Qingcheng Road, Suzhou Industrial Park, PRC, Jiangsu 215021 (CN). **ZHOU, Jiachun**; P.O. Box 2314, Gilbert, Arizona 85299 (US).

(74) Agent: **WULLER, Adam R.**; ARMSTRONG TEASDALE LLP, 7700 Forsyth Blvd., Suite 1800, St. Louis, Missouri 63105 (US).

(81) Designated States *(unless otherwise indicated, for every kind of national protection available)*: AE, AG, AL, AM, AO, AT, AU, AZ, BA, BB, BG, BH, BN, BR, BW, BY, BZ, CA, CH, CL, CN, CO, CR, CU, CV, CZ, DE, DJ, DK, DM, DO, DZ, EC, EE, EG, ES, FI, GB, GD, GE, GH, GM, GT, HN, HR, HU, ID, IL, IN, IQ, IR, IS, IT, JM, JO, JP, KE, KG, KH, KN, KP, KR, KW, KZ, LA, LC, LK, LR, LS, LU, LY,

(54) Title: SYSTEMS AND METHODS OF COOLING TEST SOCKET ASSEMBLIES FOR SEMICONDUCTOR INTEGRATED CIRCUITS

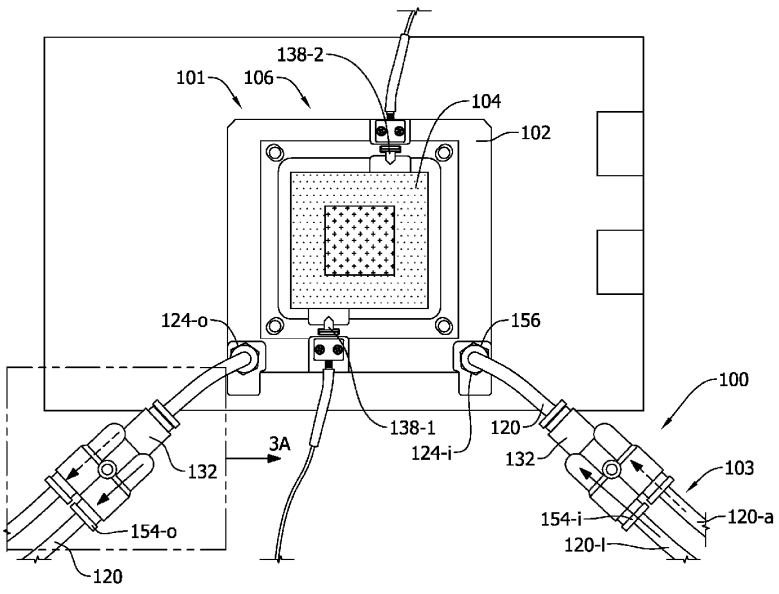

FIG. 1B

(57) Abstract: A cooling system of a test socket assembly for testing a semiconductor integrated circuit (IC) chip is provided. The system includes a first level sensor configured to detect that a level of a liquid coolant in a test socket assembly is at or above a first threshold and a second level sensor configured to detect that the level is at or above a second threshold, the second threshold being greater than the first threshold. The system also includes a controller configured to adjust flow rates of the liquid coolant based on detection by the first level sensor and detection by the second level sensor such that the level is maintained between the first threshold and the second threshold.

[Continued on next page]

WO 2025/199197 A1

MA, MD, MG, MK, MN, MU, MW, MX, MY, MZ, NA, NG, NI, NO, NZ, OM, PA, PE, PG, PH, PL, PT, QA, RO, RS, RU, RW, SA, SC, SD, SE, SG, SK, SL, ST, SV, SY, TH, TJ, TM, TN, TR, TT, TZ, UA, UG, US, UY, UZ, VC, VN, WS, ZA, ZM, ZW.

(84) **Designated States** *(unless otherwise indicated, for every kind of regional protection available)*: ARIPO (BW, CV, GH, GM, KE, LR, LS, MW, MZ, NA, RW, SC, SD, SL, ST, SZ, TZ, UG, ZM, ZW), Eurasian (AM, AZ, BY, KG, KZ, RU, TJ, TM), European (AL, AT, BE, BG, CH, CY, CZ, DE, DK, EE, ES, FI, FR, GB, GR, HR, HU, IE, IS, IT, LT, LU, LV, MC, ME, MK, MT, NL, NO, PL, PT, RO, RS, SE, SI, SK, SM, TR), OAPI (BF, BJ, CF, CG, CI, CM, GA, GN, GQ, GW, KM, ML, MR, NE, SN, TD, TG).

Published:

— *with international search report (Art. 21(3))*