FIG. 1

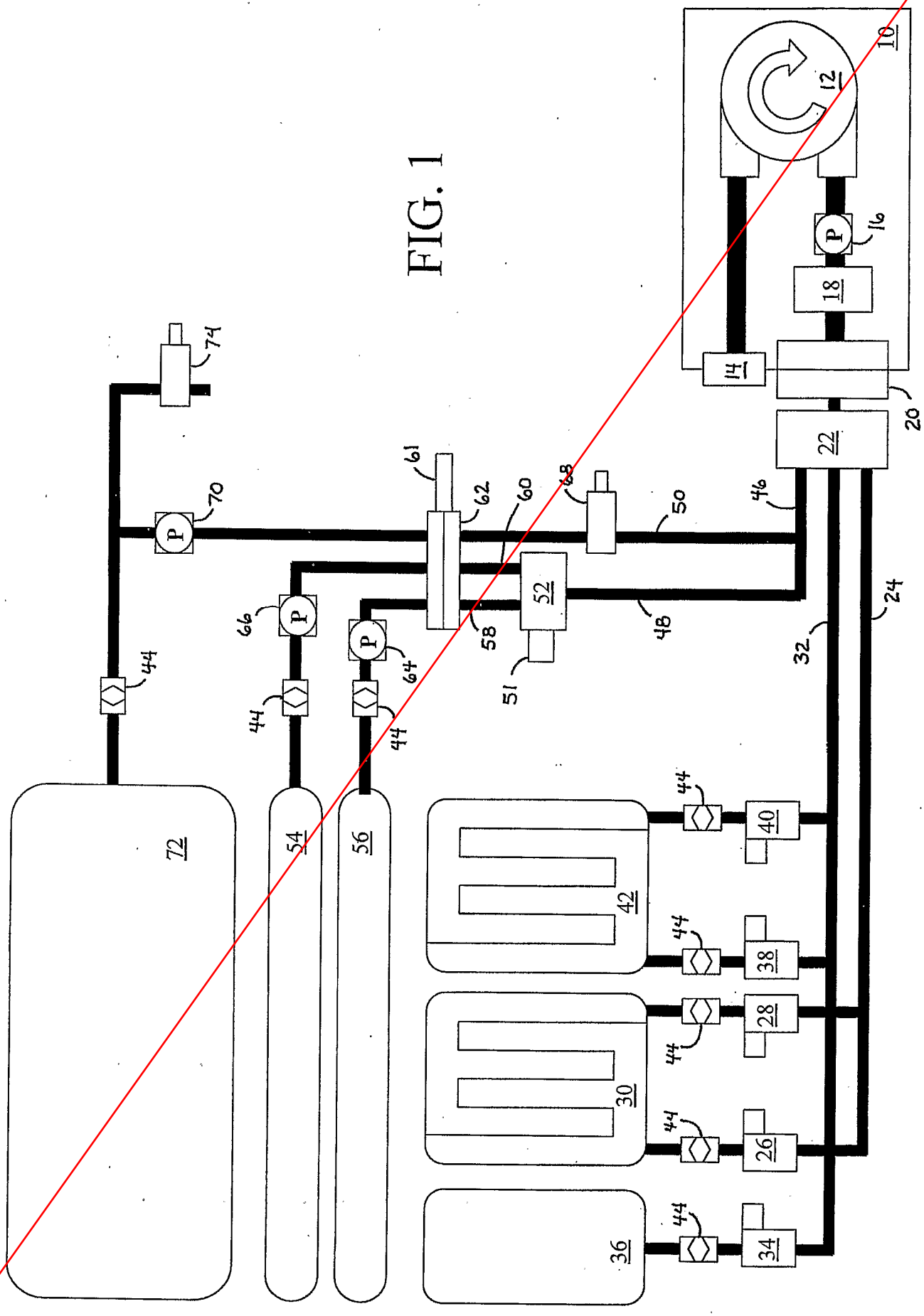
10
12
14
16
18
20
22
24
26
28
30
32
34
36
38
40
42
44
46
48
50
51
52
54
56
58
60
61
62
64
66
70
72
74
P

FIG. 2

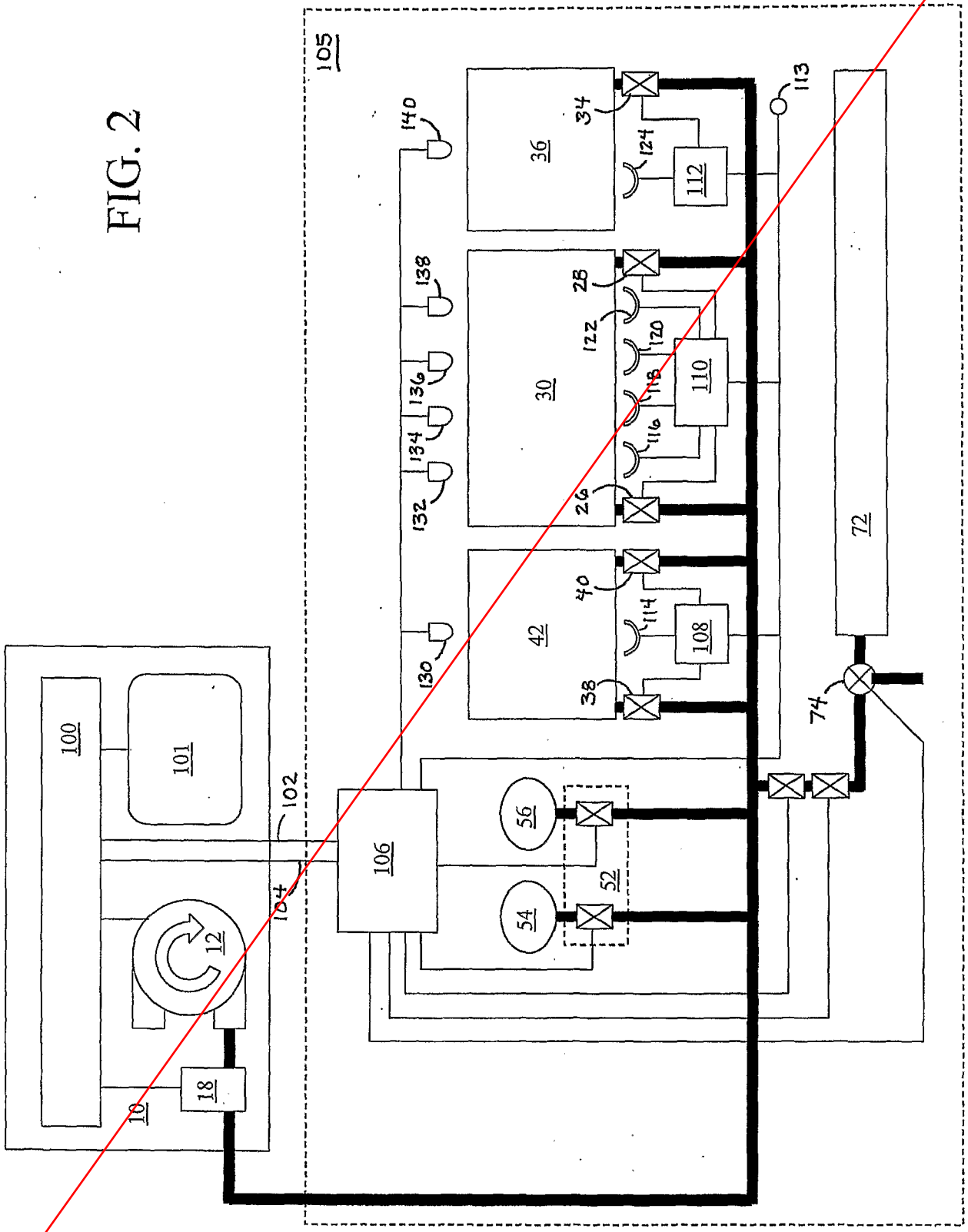
105
140
138
136
134
132
130
36
34
124
112
30
28
122
120
118
116
110
26
42
40
114
108
38
72
113
74
100
101
102
104
106
56
54
52
12
18
10

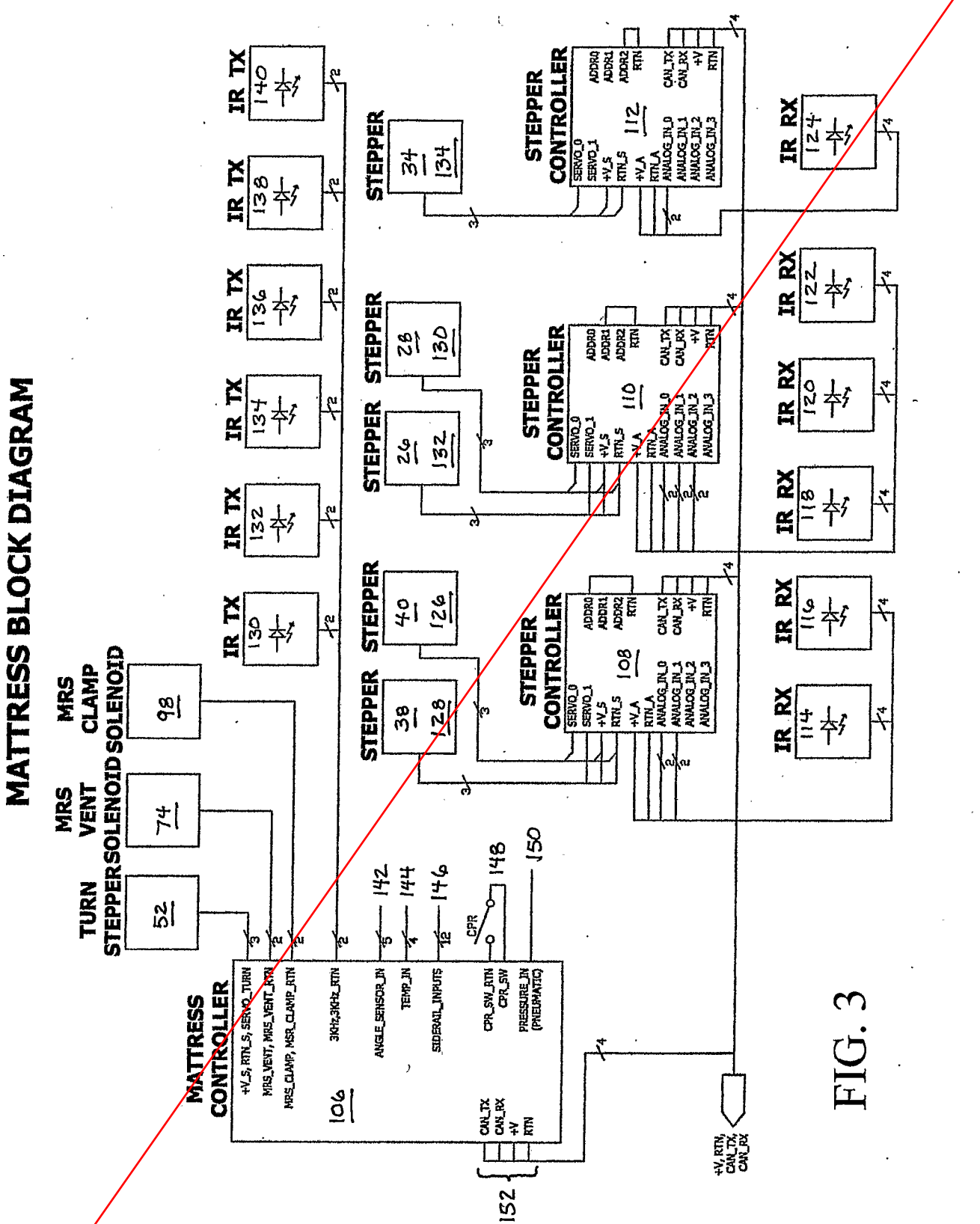
MATTRESS BLOCK DIAGRAM
MRS CLAMP SOLENOID
MRS VENT SOLENOID
TURN STEPPER
98
74
52
MATTRESS CONTROLLER
106
+V_S, RTN_S, SERVO_TURN
MRS_VENT, MRS_VENT_RTN
MRS_CLAMP, MSR_CLAMP_RTN
3KHz,3KHz_RTN
ANGLE_SENSOR_IN
TEMP_IN
SIDERAIL_INPUTS
CPR_SW_RTN
CPR_SW
PRESSURE_IN (PNEUMATIC)
CAN_TX
CAN_RX
+V
RTN
142
144
146
148
150
152
CPR
STEPPER CONTROLLER
108
110
112
SERVO_0
SERVO_1
+V_S
RTN_S
+V_A
RTN_A
ANALOG_IN_0
ANALOG_IN_1
ANALOG_IN_2
ANALOG_IN_3
ADDR0
ADDR1
ADDR2
STEPPER
34
134
28
130
26
132
40
126
38
128
IR TX
140
138
136
134
132
130
IR RX
124
122
120
118
116
114
+V, RTN, CAN_TX, CAN_RX

FIG. 3

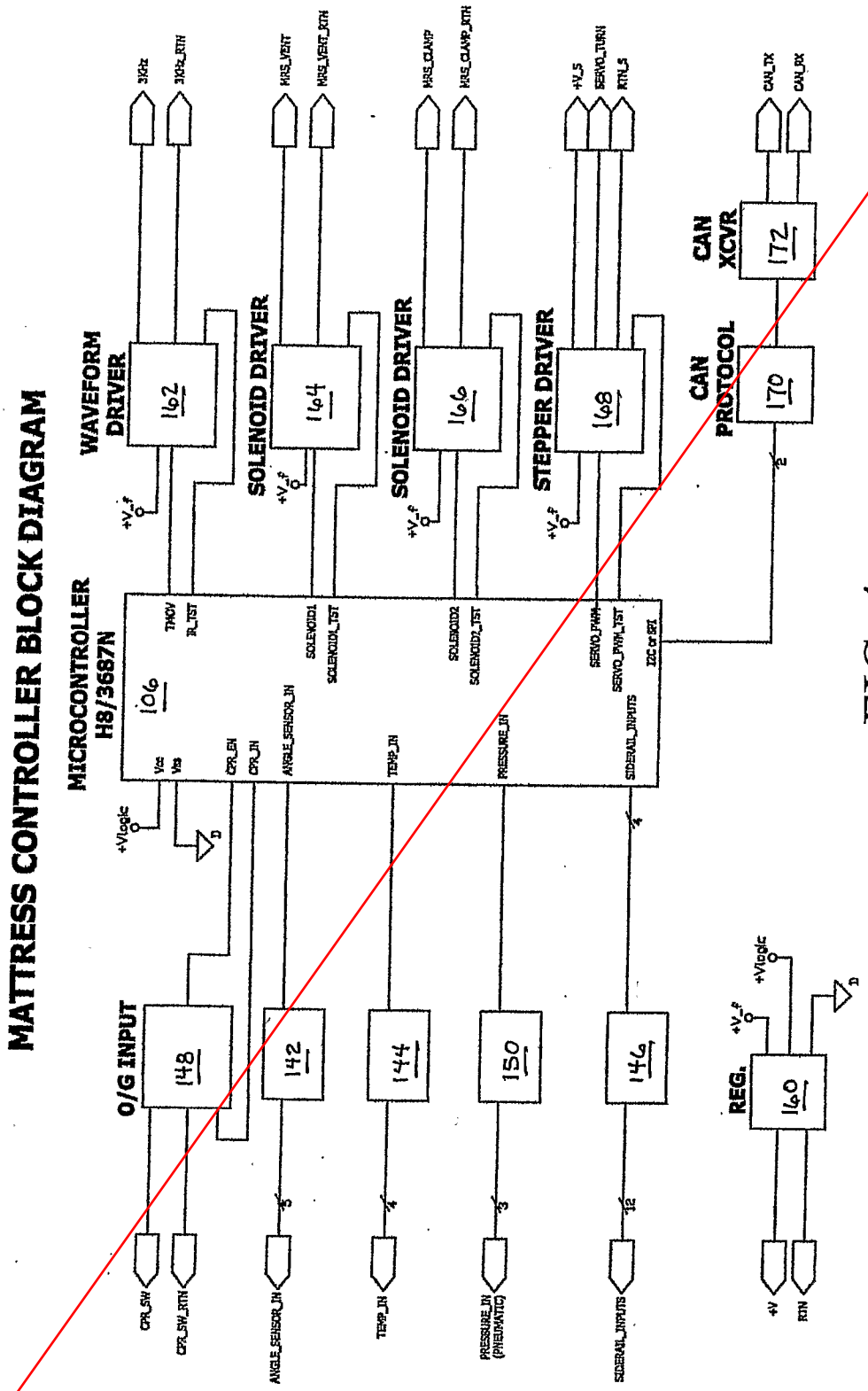
MATTRESS CONTROLLER BLOCK DIAGRAM
MICROCONTROLLER H8/3687N
106
WAVEFORM DRIVER
162
SOLENOID DRIVER
164
SOLENOID DRIVER
166
STEPPER DRIVER
168
CAN PROTOCOL
170
CAN XCVR
172
O/G INPUT
148
142
144
150
146
REG.
160
+Vlogic
+V_F
3KHz
3KHz_RTN
HRS_VENT
HRS_VENT_RTN
HRS_CLAMP
HRS_CLAMP_RTN
+VLS
SERVO_TURN
RTNLS
CAN_TX
CAN_RX
THOV
TL_TST
SOLENOID1
SOLENOID1_TST
SOLENOID2
SOLENOID2_TST
SERVO_PWM
SERVO_FWH_TST
I2C or SPI
Vcc
Vss
CPR_EN
CPR_IN
ANGLE_SENSOR_IN
TEMP_IN
PRESSURE_IN
SIDERAIL_INPUTS
CPR_SW
CPR_SW_RTN
PRESSURE_IN (PNEUMATIC)
+V
RTN

FIG. 4

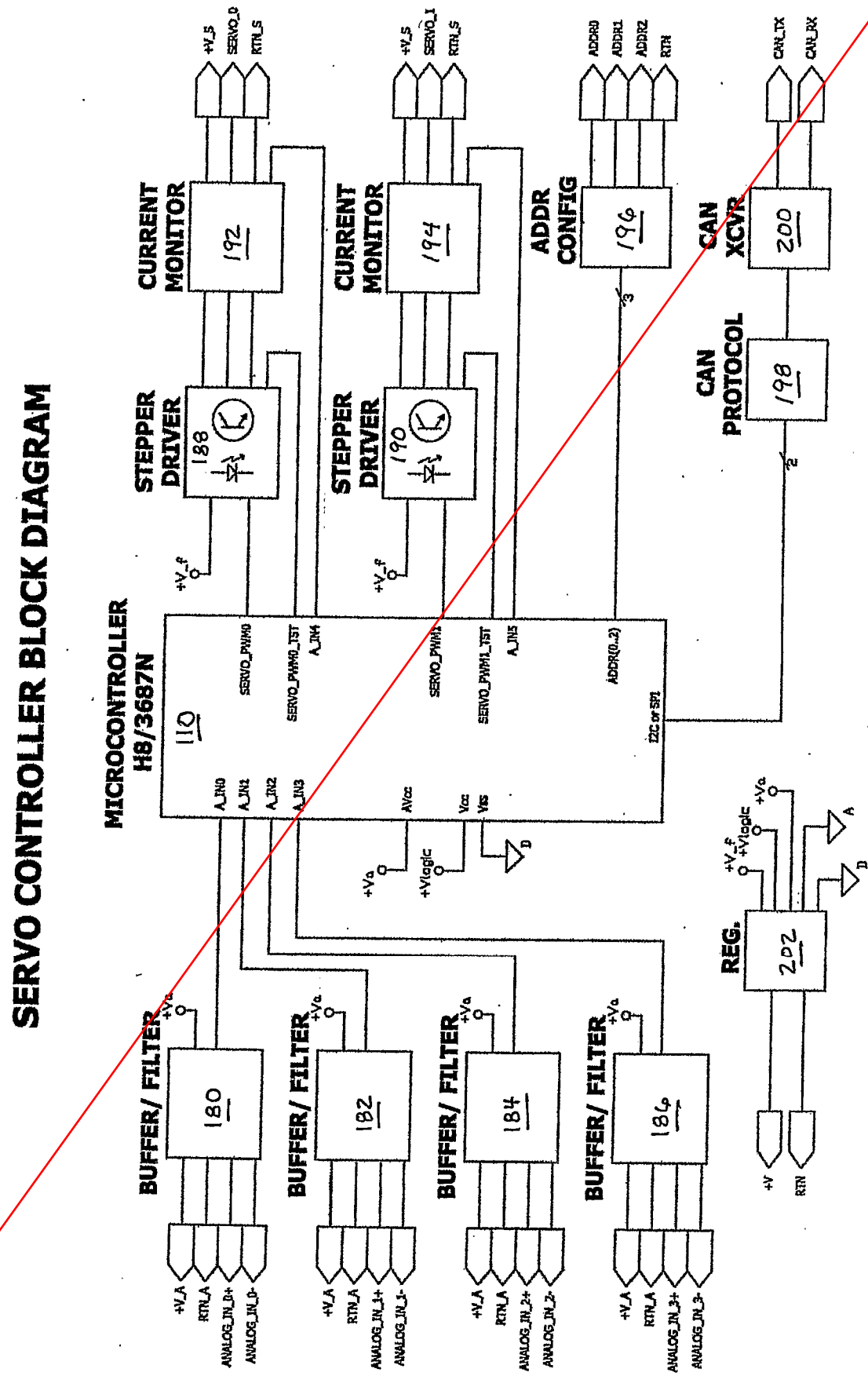
SERVO CONTROLLER BLOCK DIAGRAM
MICROCONTROLLER H8/3687N
110
STEPPER DRIVER
188
STEPPER DRIVER
190
CURRENT MONITOR
192
CURRENT MONITOR
194
ADDR CONFIG
196
CAN XCVR
200
CAN PROTOCOL
198
REG.
202
BUFFER/ FILTER
180
BUFFER/ FILTER
182
BUFFER/ FILTER
184
BUFFER/ FILTER
186
+V_S
SERVO_0
RTN_S
SERVO_1
ADDR0
ADDR1
ADDR2
RTN
CAN_TX
CAN_RX
+V_F
SERVO_PWM0
SERVO_PWM0_TST
A_IN4
SERVO_PWM1
SERVO_PWM1_TST
A_IN5
ADDR(0..2)
I2C or SPI
A_IN0
A_IN1
A_IN2
A_IN3
AVcc
Vcc
Vss
+Va
+Vlogic
+V_A
RTN_A
ANALOG_IN_0+
ANALOG_IN_0-
ANALOG_IN_1+
ANALOG_IN_1-
ANALOG_IN_2+
ANALOG_IN_2-
ANALOG_IN_3+
ANALOG_IN_3-
+V
RTN

FIG. 5

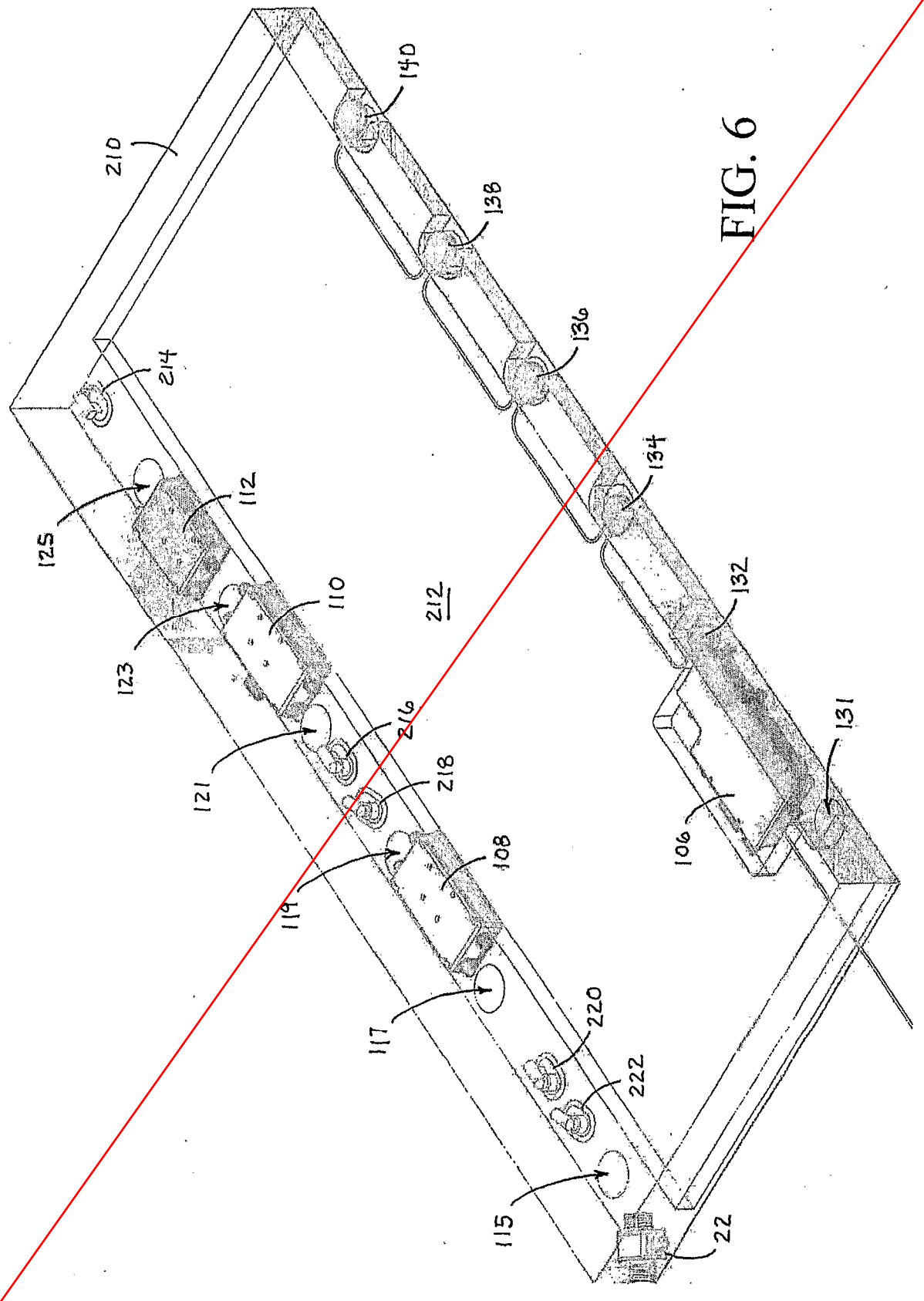
210
140
138
136
134
214
125
112
132
110
212
123
131
216
121
218
106
108
119
117
220
222
115
22

FIG. 6

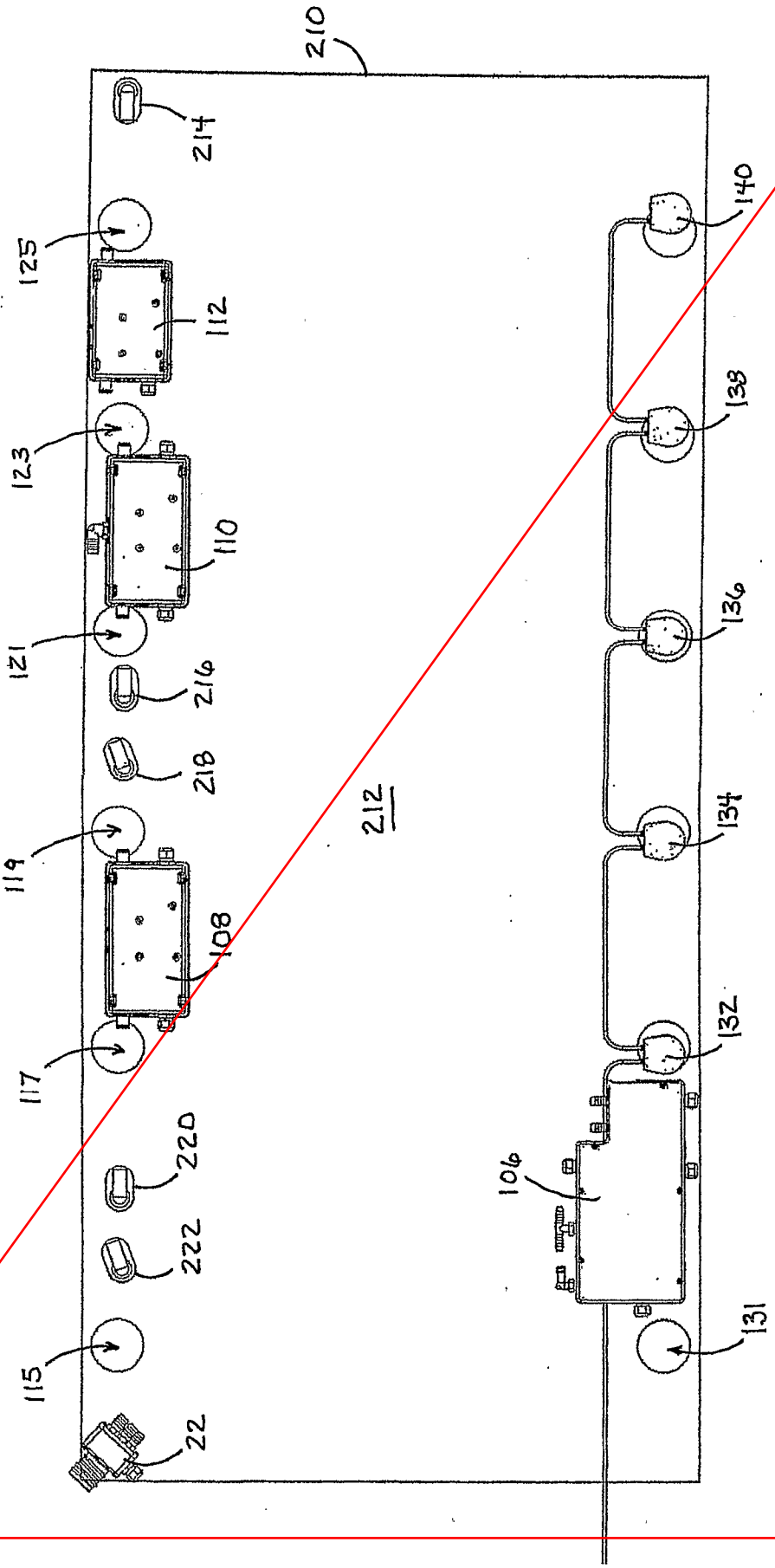
210
214
125
112
123
110
121
216
218
212
119
108
117
220
222
115
22
140
138
136
134
132
106
131

FIG. 7

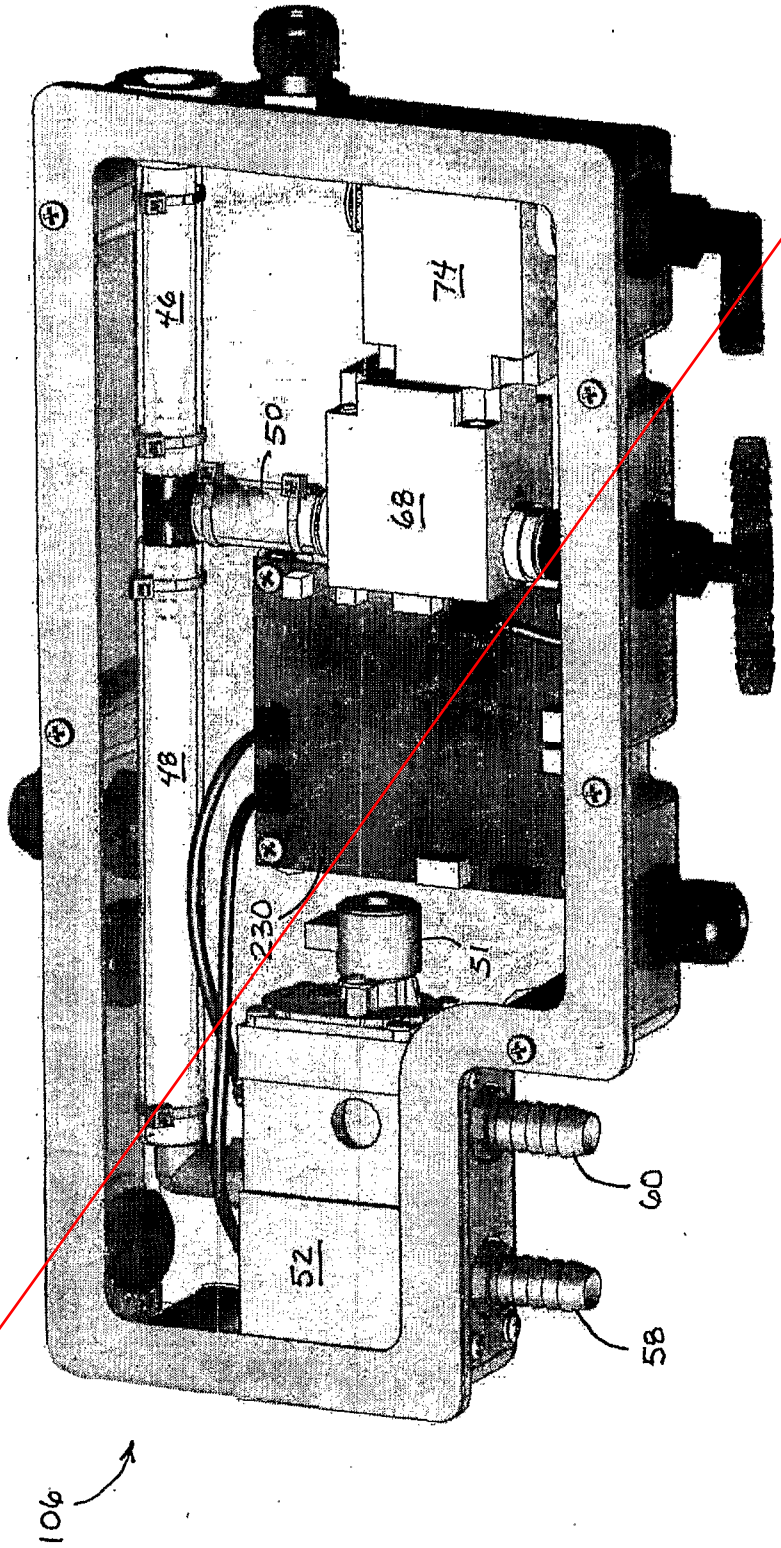


FIG. 8

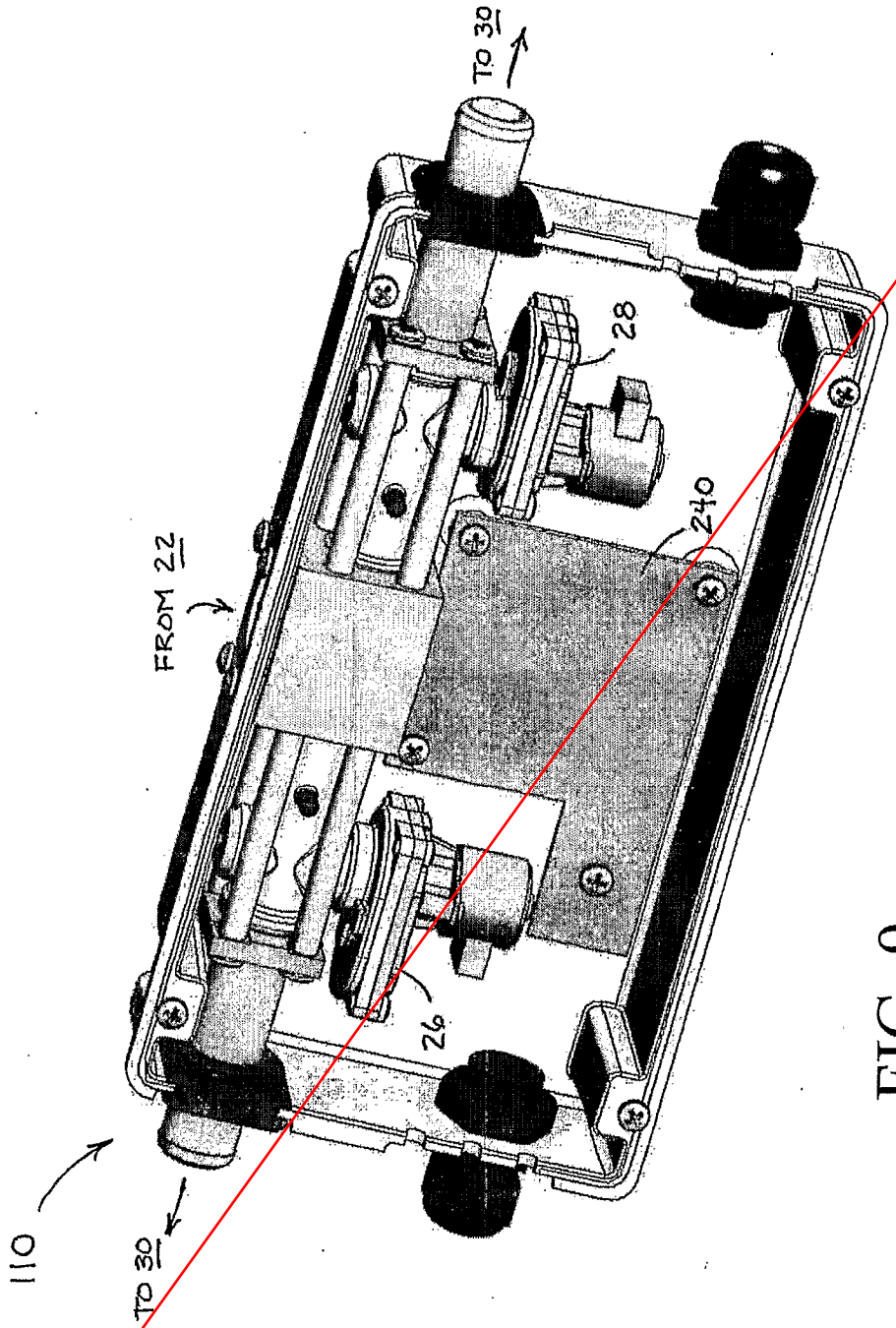


FIG. 9

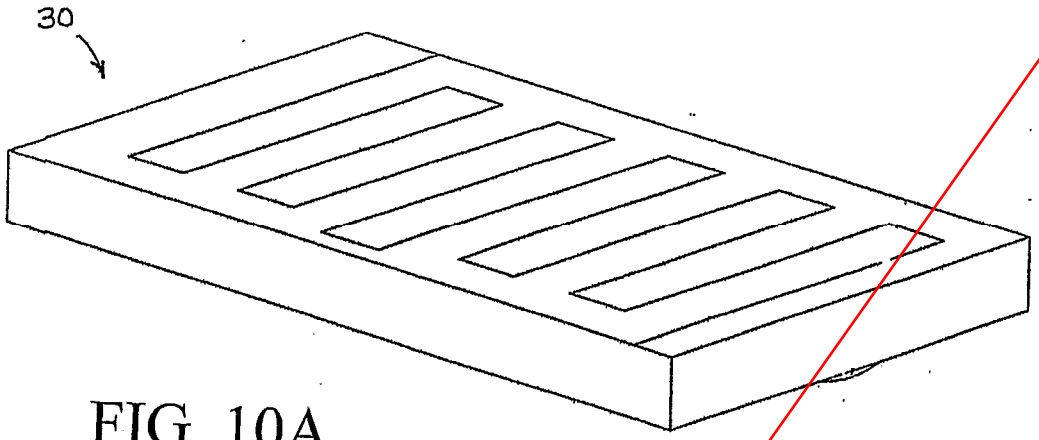


FIG. 10A

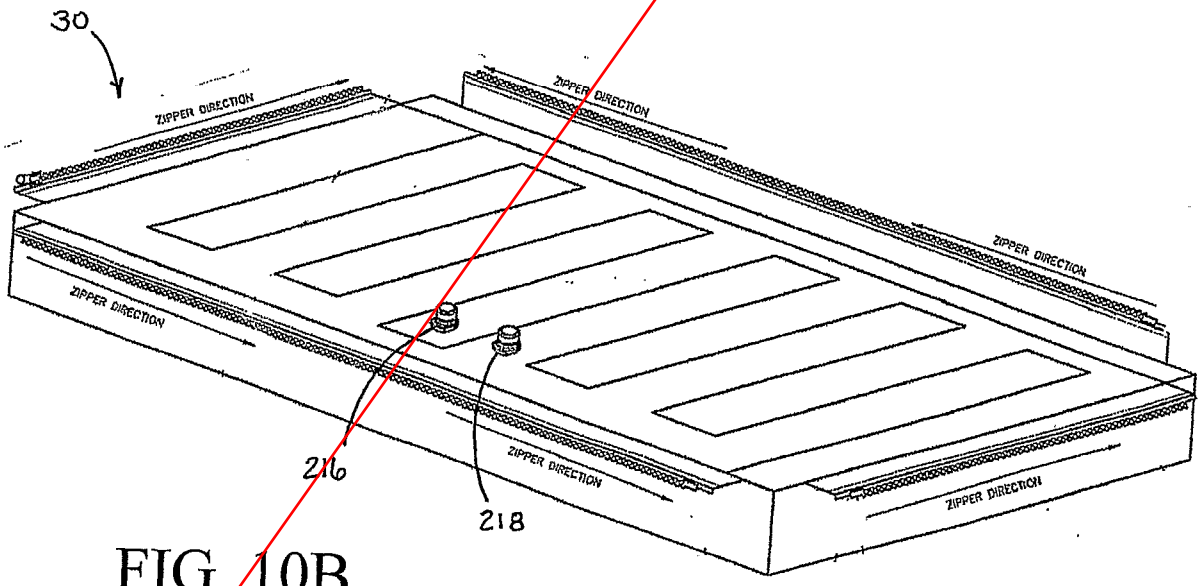


FIG. 10B

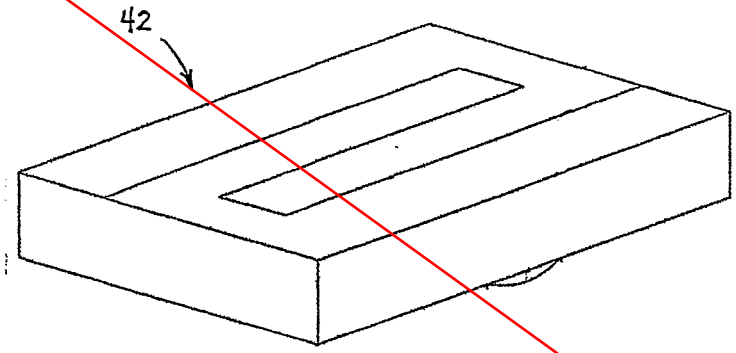


FIG. 11A

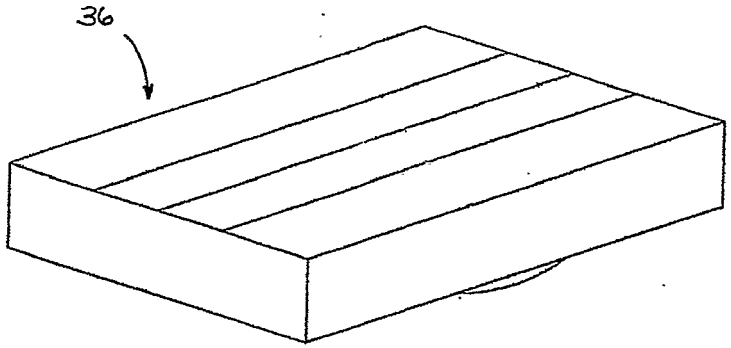


FIG. 12A

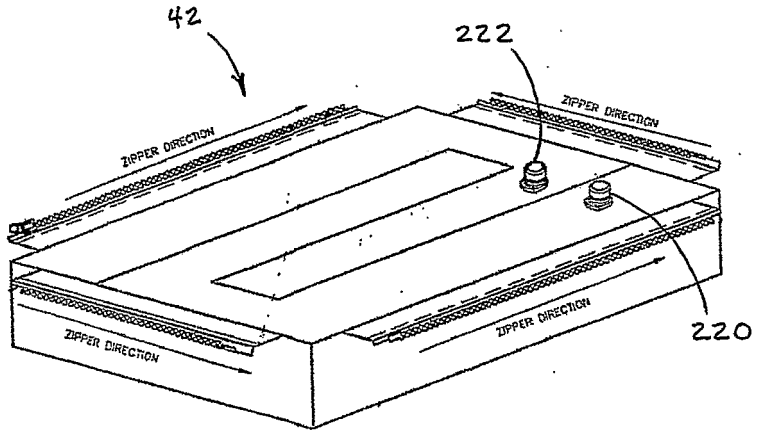


FIG. 11B

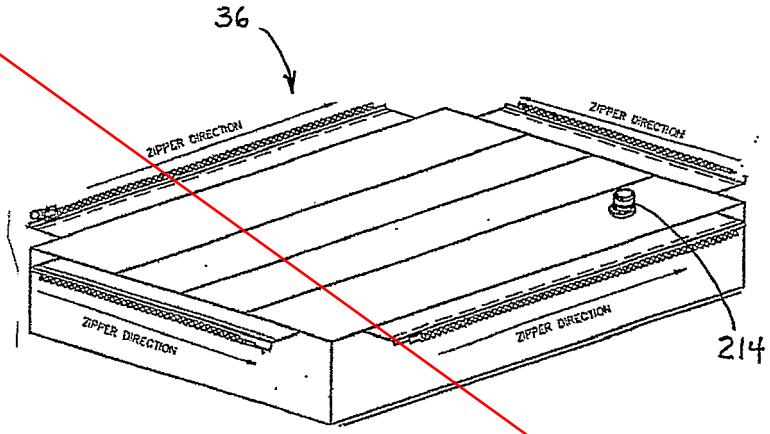


FIG. 12B

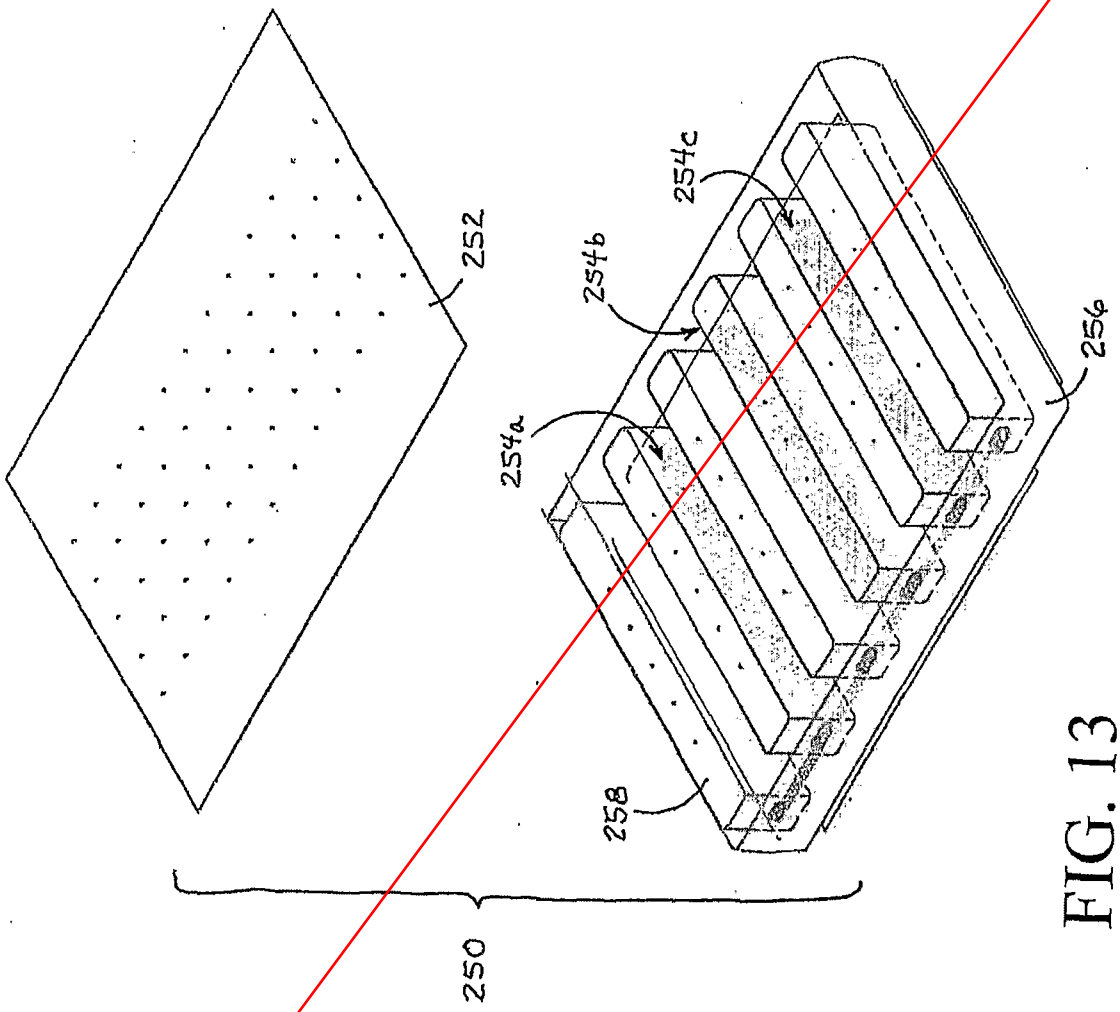


FIG. 13

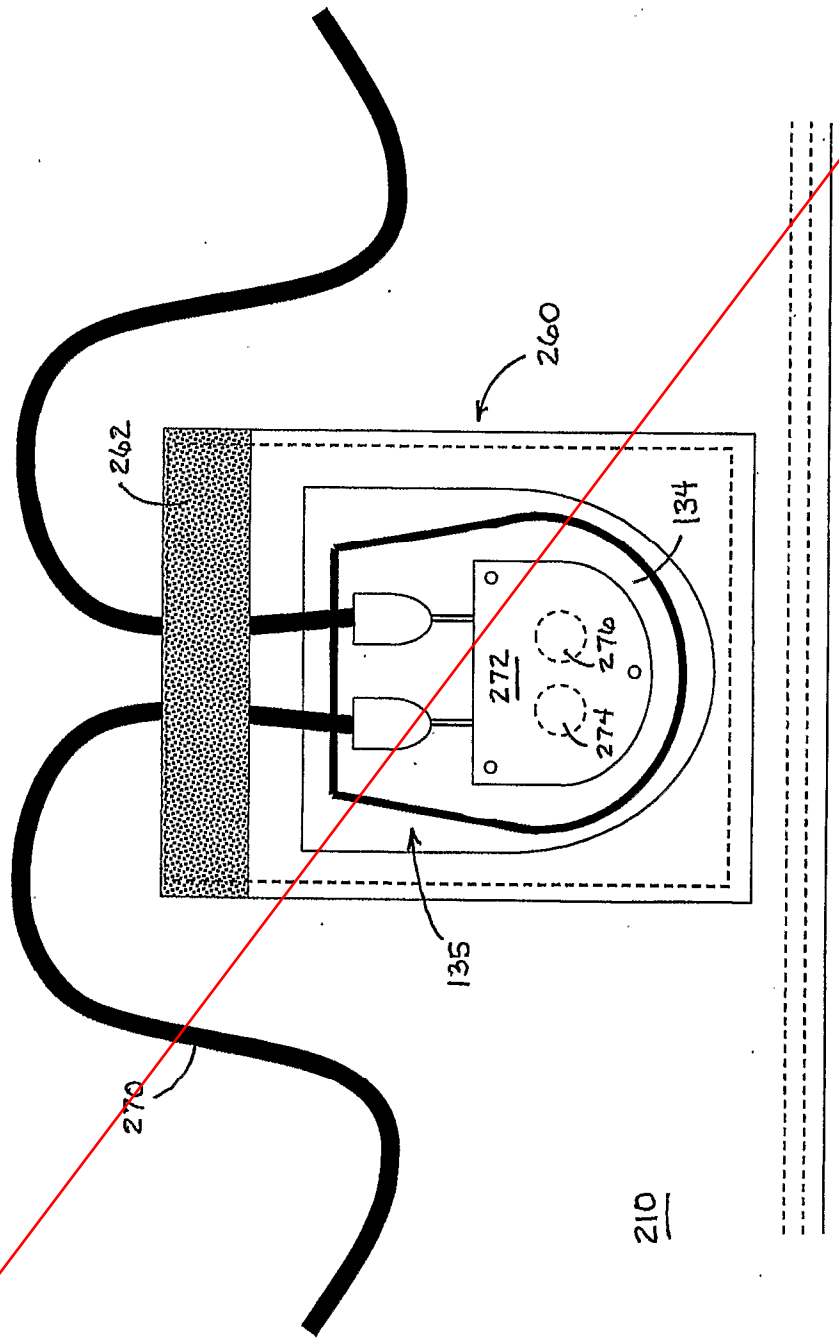


FIG. 14

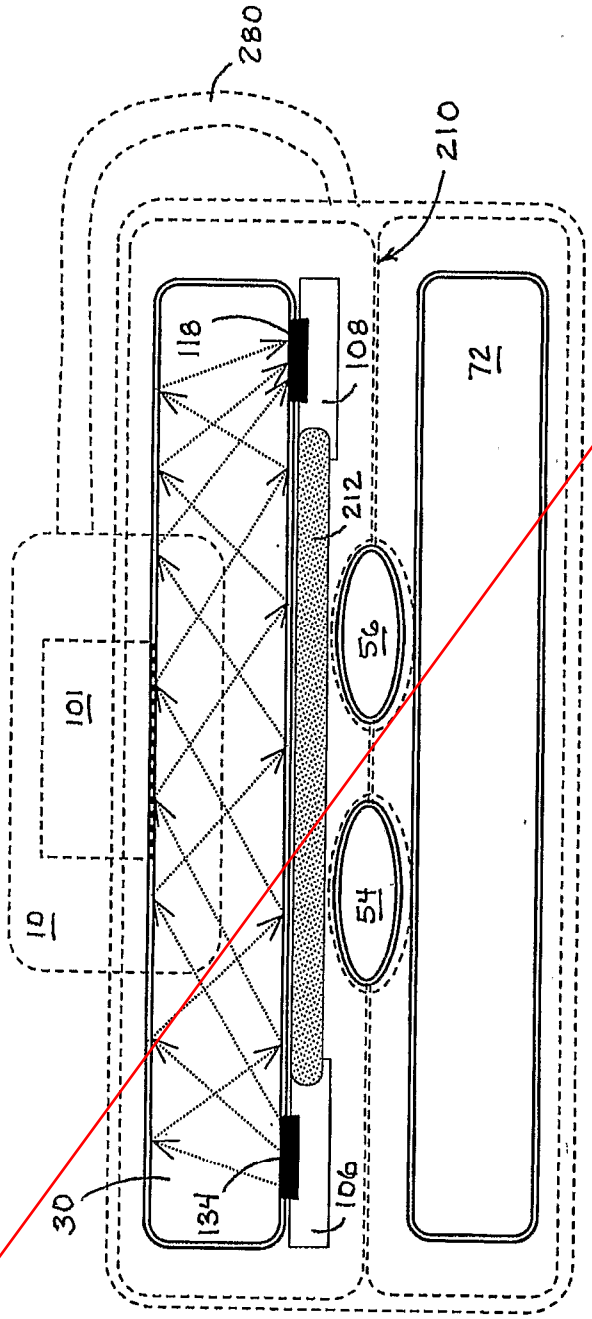


FIG. 15

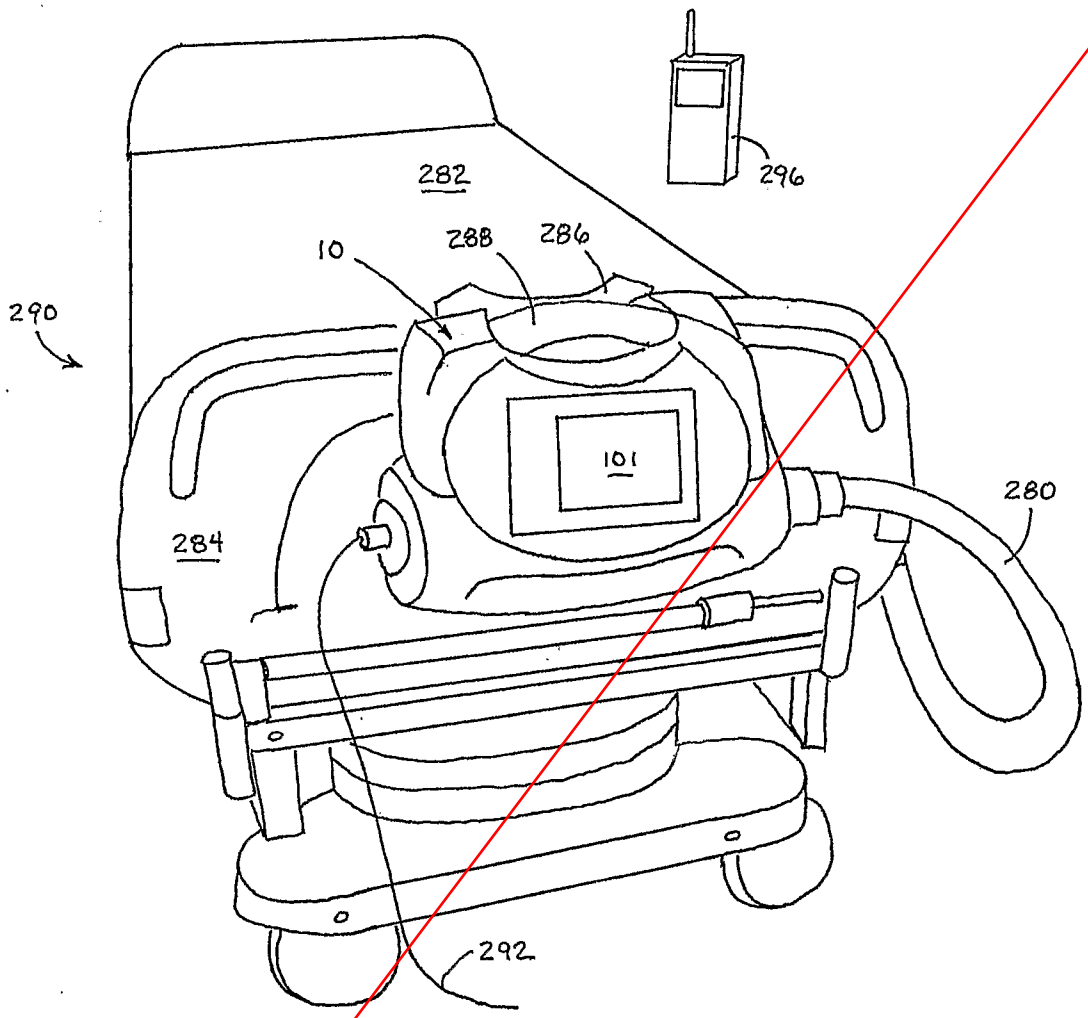


FIG. 16

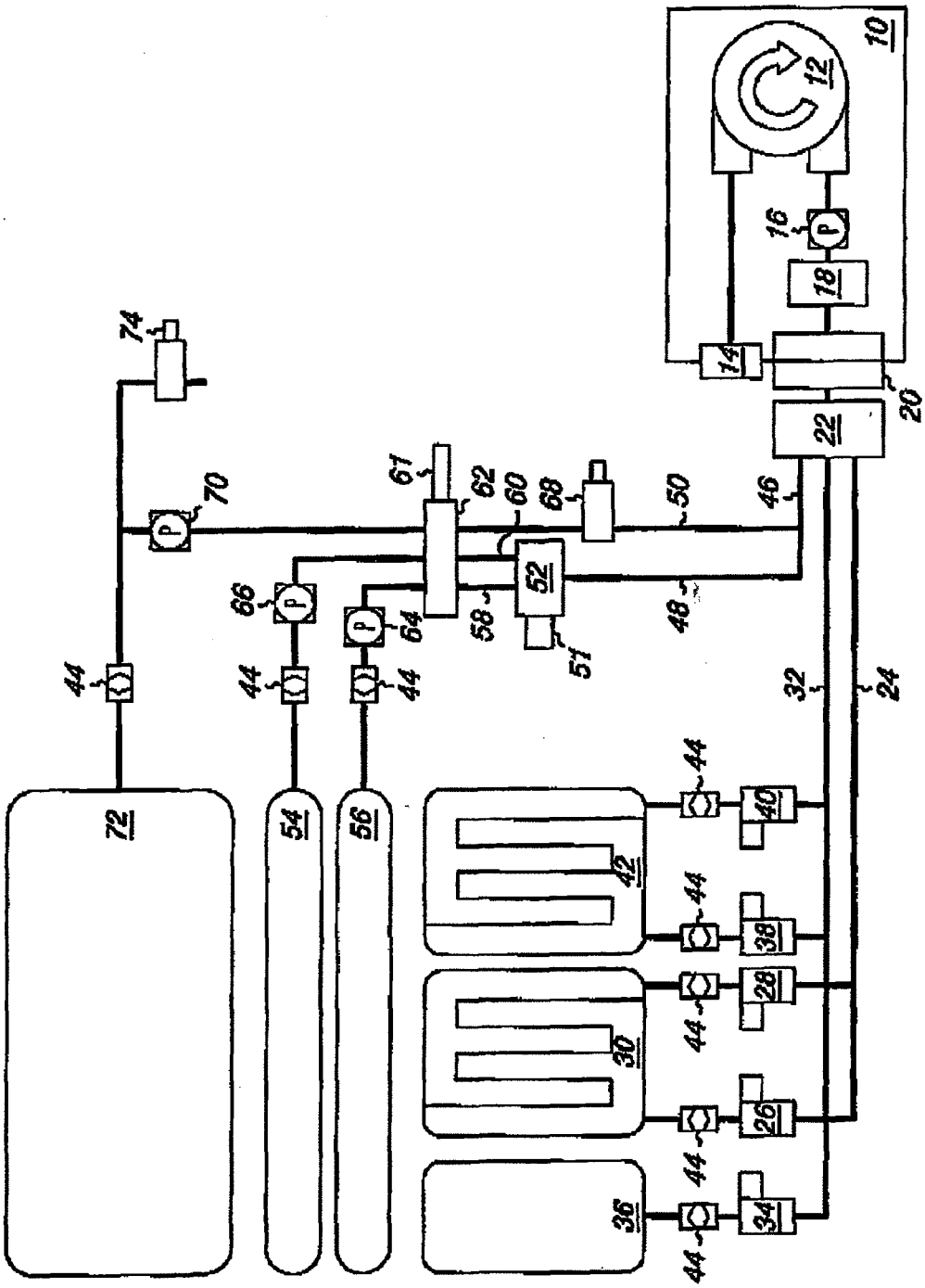
10
12
16
18
14
20
22
74
70
61
62
60
68
50
46
66
64
58
52
48
51
44
32
24
72
54
56
42
40
38
28
30
26
36
34

Fig. 1

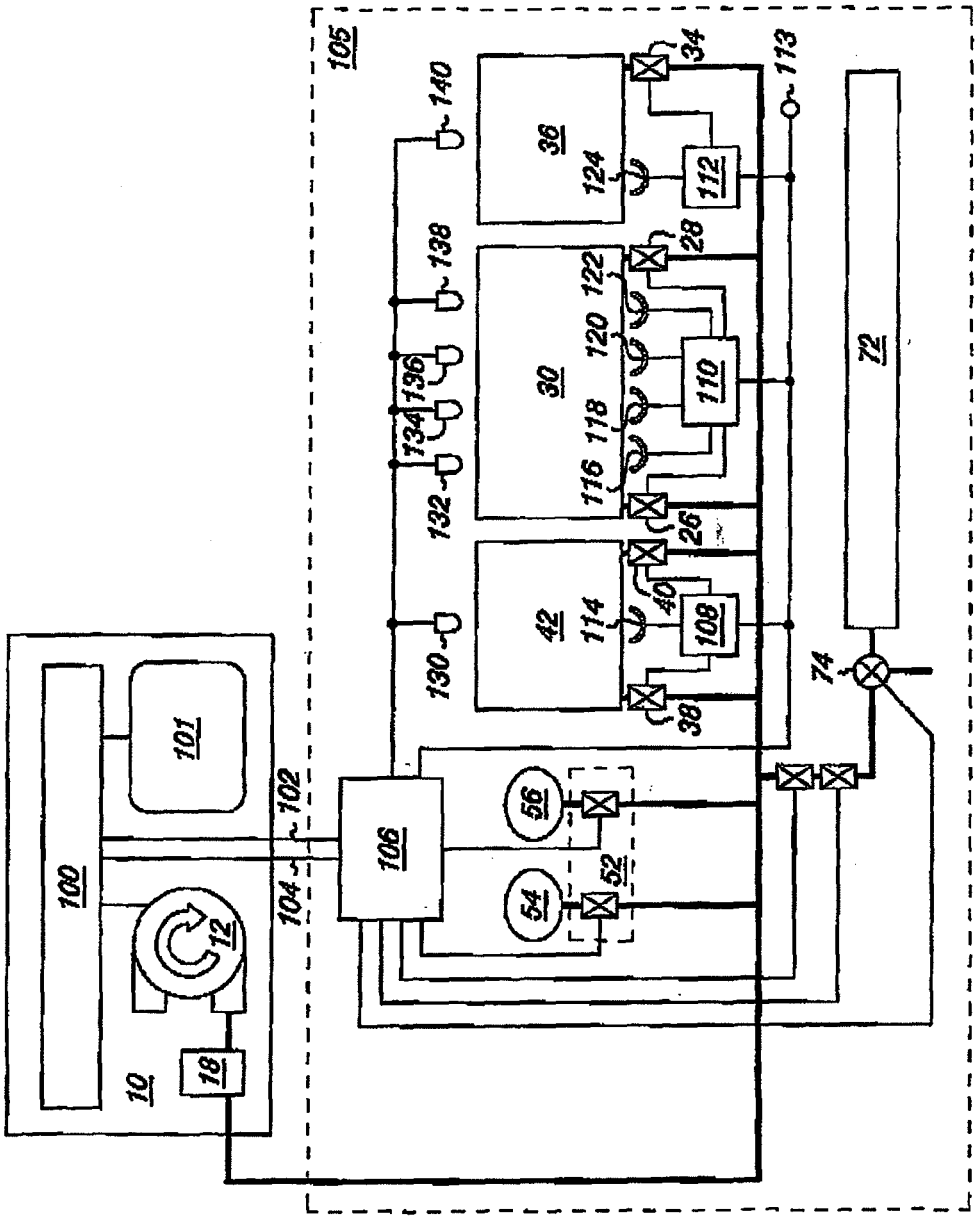
105
140
36
124
112
34
113
138
28
122
120
30
110
136
134
118
116
132
26
40
42
114
108
130
38
74
72
101
102
106
56
52
54
100
104
12
10
18

Fig. 2

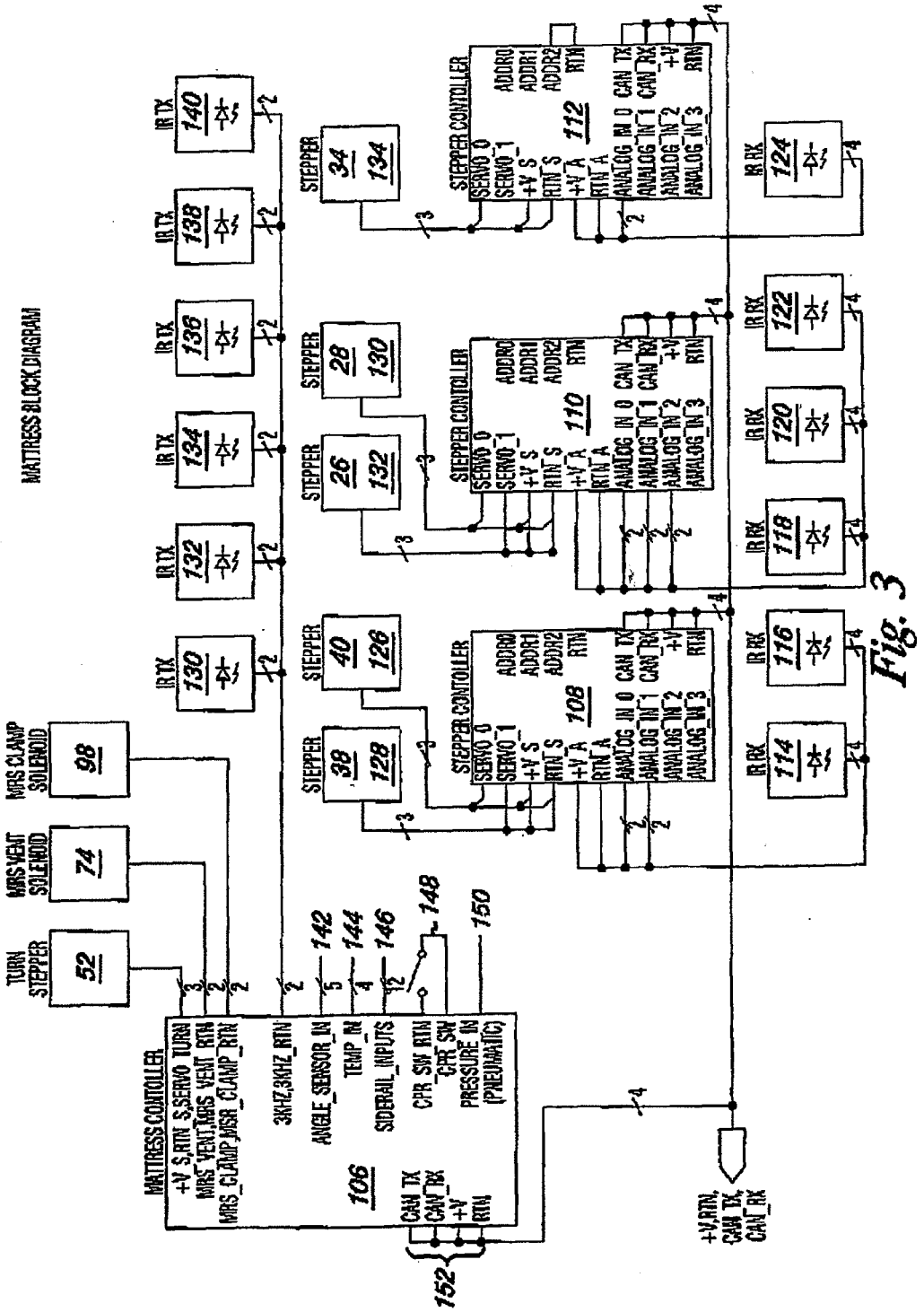
MATTRESS BLOCK DIAGRAM
MATTRESS CONTOLLER
+V S,RTN S,SERVO_TURN
MRS_VENT,MRS_VENT_RTN
MRS_CLAMP,MSR_CLAMP_RTN
3KHZ,3KHZ_RTN
ANGLE_SENSOR_IN
TEMP_IN
SIDERAIL_INPUTS
CPR_SW_RTN
CPR_SW
PRESSURE_IN (PNEUMATIC)
CAN_TX
CAN_RX
+V
RTN
106
TURN STEPPER
52
MRS VENT SOLENOID
74
MRS CLAMP SOLENOID
98
142
144
146
148
150
152
STEPPER CONTOLLER
SERVO_0
SERVO_1
+V S
RTN S
+V A
RTN A
ANALOG_IN_0
ANALOG_IN_1
ANALOG_IN_2
ANALOG_IN_3
ADDR0
ADDR1
ADDR2
CAN_TX
CAN_RX
108
110
112
STEPPER
IR TX
IR RX
+V,RTN, CAN_TX, CAN_RX

Fig. 3

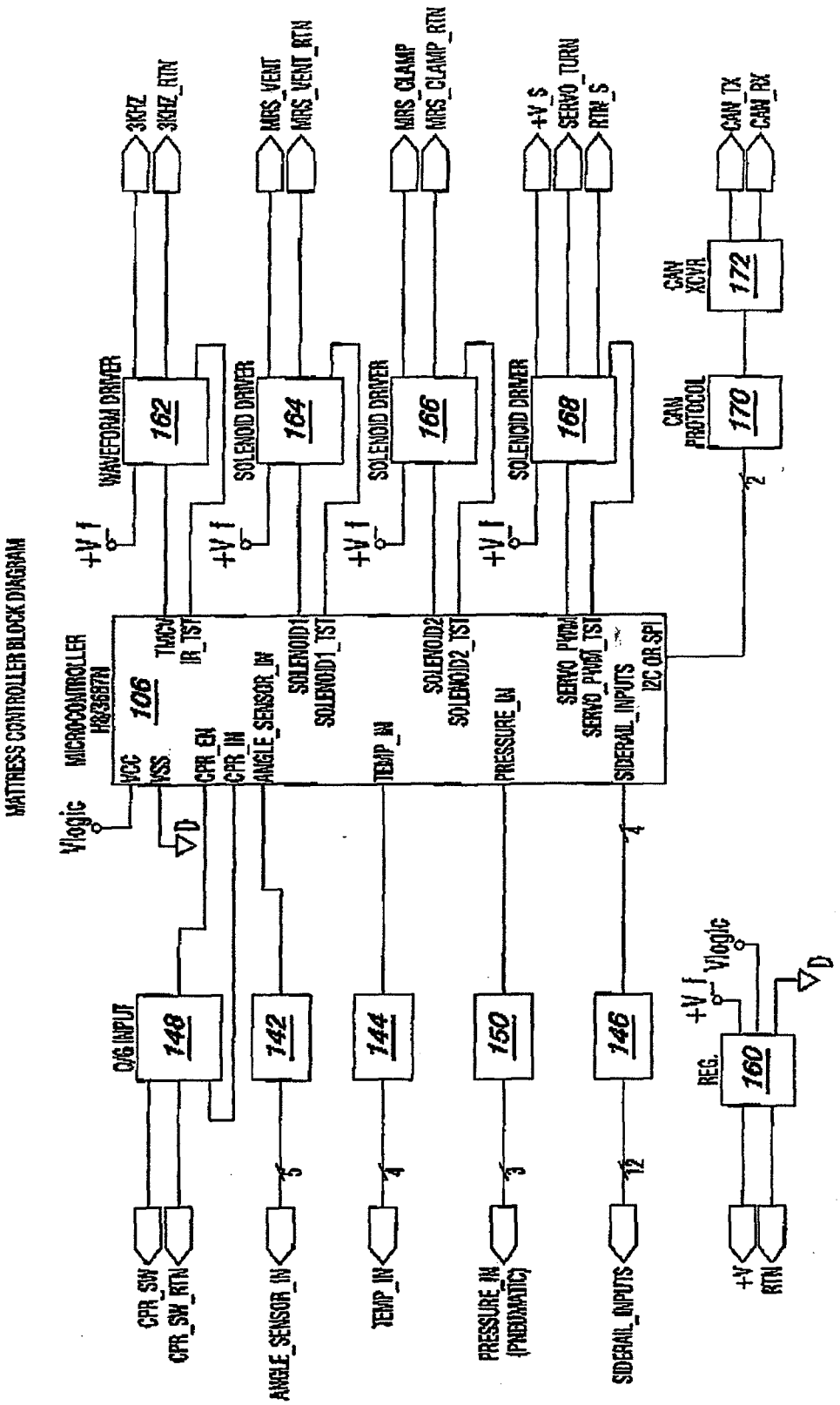
MATTRESS CONTROLLER BLOCK DIAGRAM
MICROCONTROLLER H8/3687N
106
VCC
VSS
CPR_EN
CPR_IN
ANGLE_SENSOR_IN
TEMP_IN
PRESSURE_IN
SIDERAIL_INPUTS
I2C OR SPI
THCW IR_TST
SOLENOID1
SOLENOID1_TST
SOLENOID2
SOLENOID2_TST
SERVO_PWM
SERVO_PWM_TST
Vlogic
D
+V f
WAVEFORM DRIVER
162
SOLENOID DRIVER
164
166
168
3KHZ
30HZ_RTN
MRS_VENT
MRS_VENT_RTN
MRS_CLAMP
MRS_CLAMP_RTN
+V_S
SERVO_TURN
RTN_S
CAN_TX
CAN_RX
CAN XCVR
172
CAN PROTOCOL
170
2
O/S INPUT
148
142
144
150
146
4
CPR_SW
CPR_SW_RTN
ANGLE_SENSOR_IN
5
TEMP_IN
4
PRESSURE_IN (PNEUMATIC)
3
SIDERAIL_INPUTS
12
REG.
160
+V
RTN

*Fig. 4*

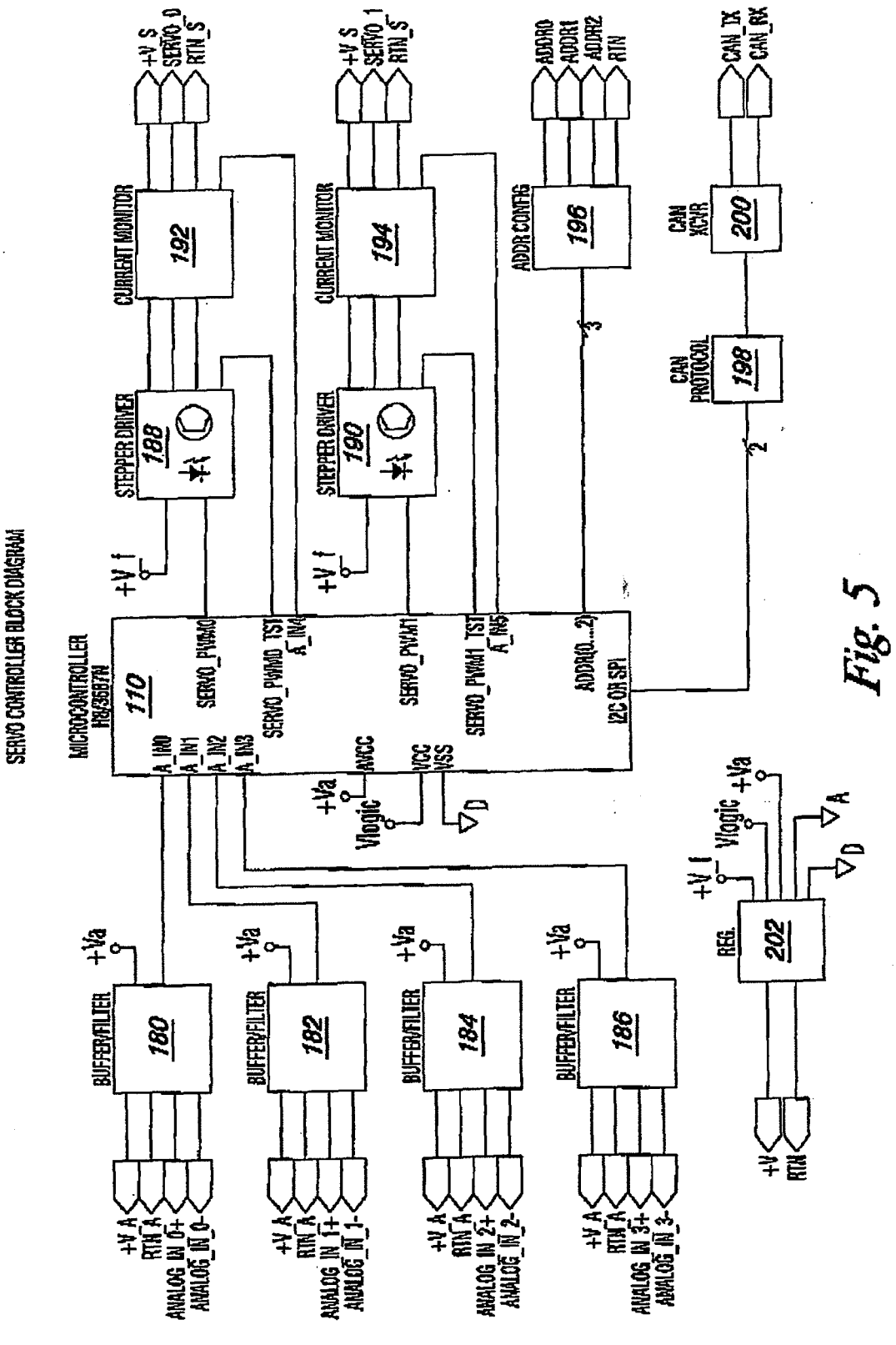
SERVO CONTROLLER BLOCK DIAGRAM
MICROCONTROLLER
110
STEPPER DRIVER
188
CURRENT MONITOR
192
STEPPER DRIVER
190
CURRENT MONITOR
194
ADDR CONFIG
196
CAN PROTOCOL
198
CAN XCVR
200
BUFFER/FILTER
180
BUFFER/FILTER
182
BUFFER/FILTER
184
BUFFER/FILTER
186
REG.
202
+V f
+Va
Vlogic
D
A
+V
RTN

Fig. 5

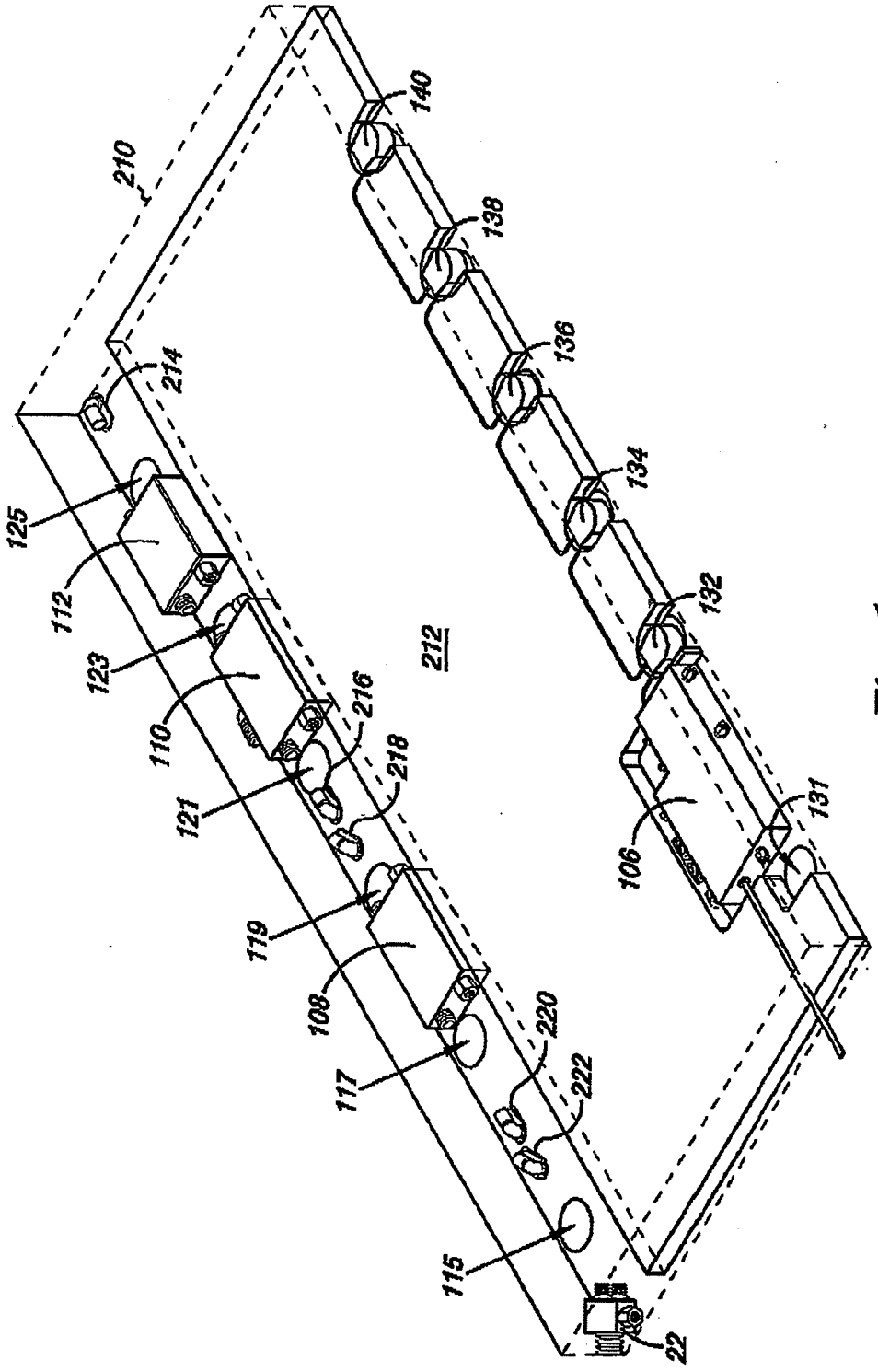
210
140
138
136
134
132
214
125
112
123
110
121
216
218
212
119
108
117
220
222
115
106
131
22

Fig. 6

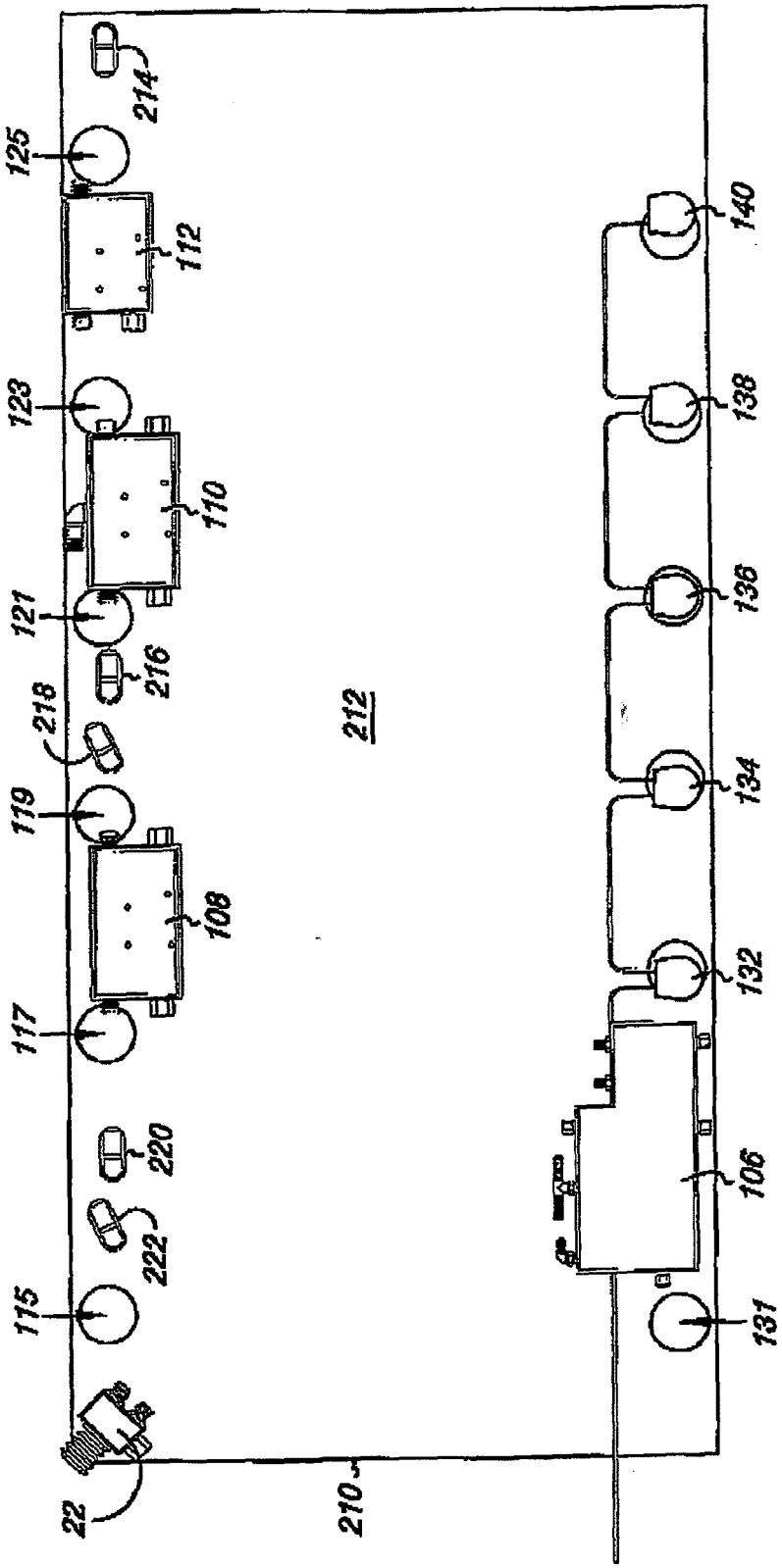
214
125
112
123
110
121
216
218
119
108
212
117
220
222
115
22
210
140
138
136
134
132
106
131

Fig. 7

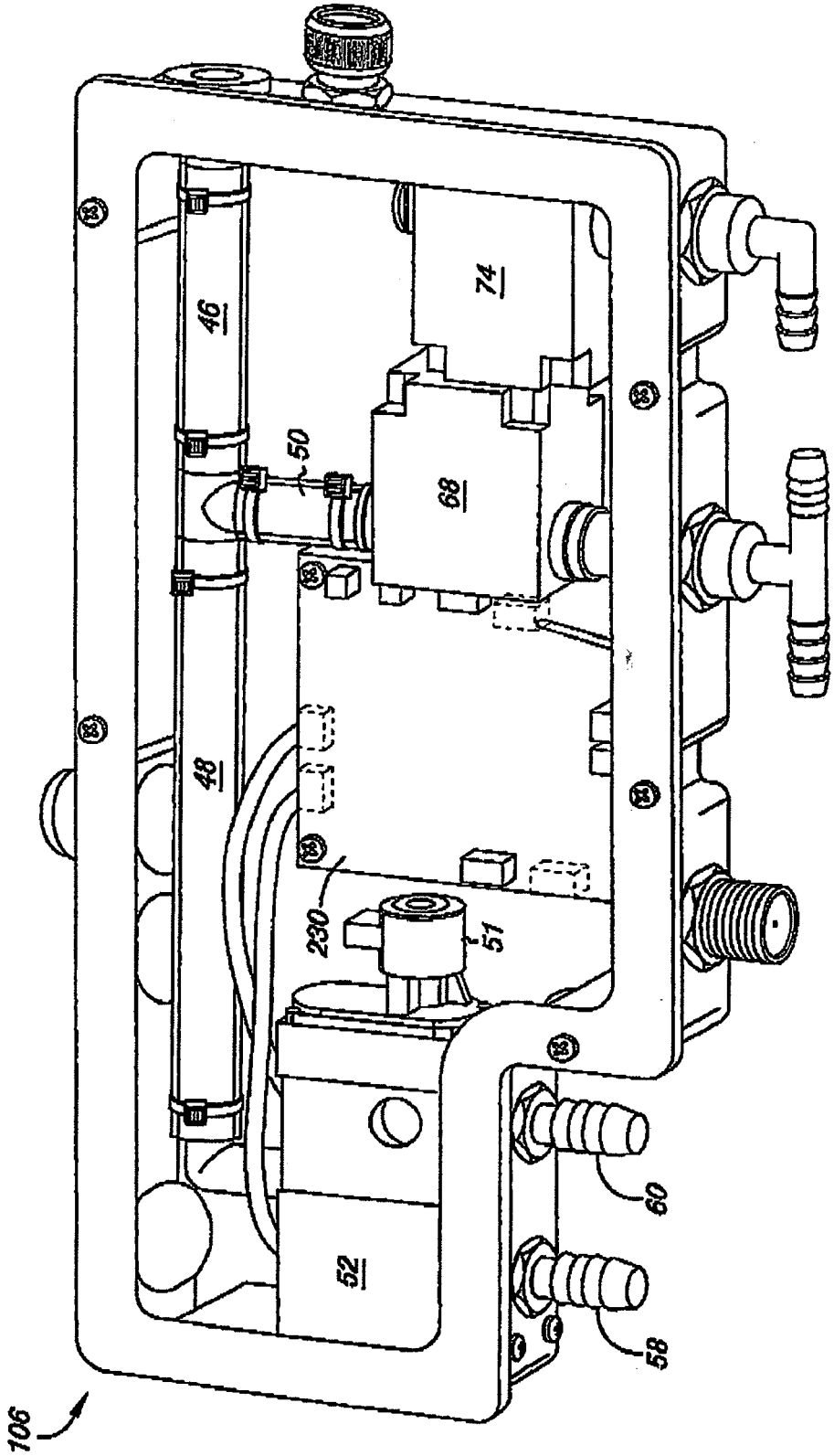


Fig. 8

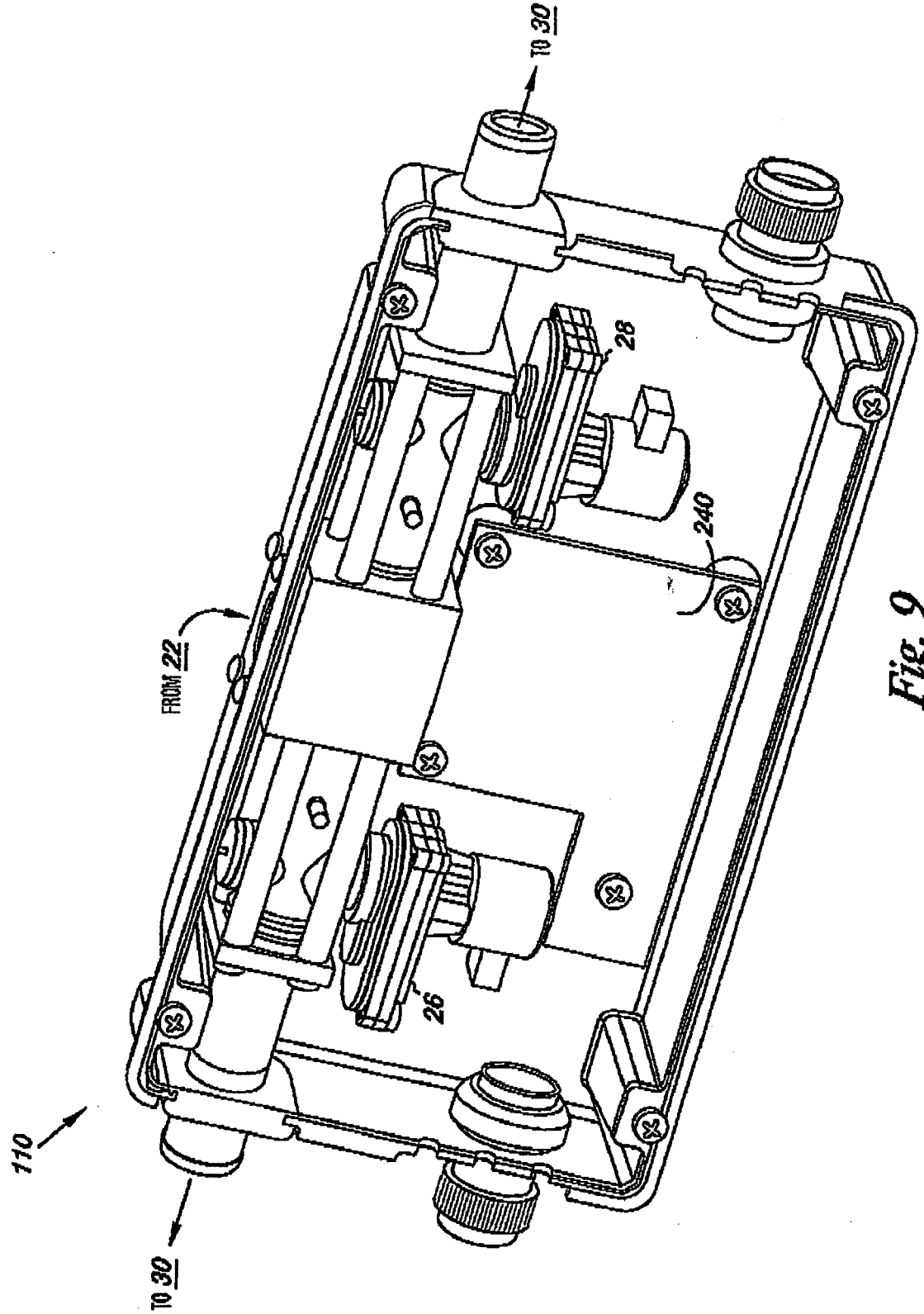


Fig. 9

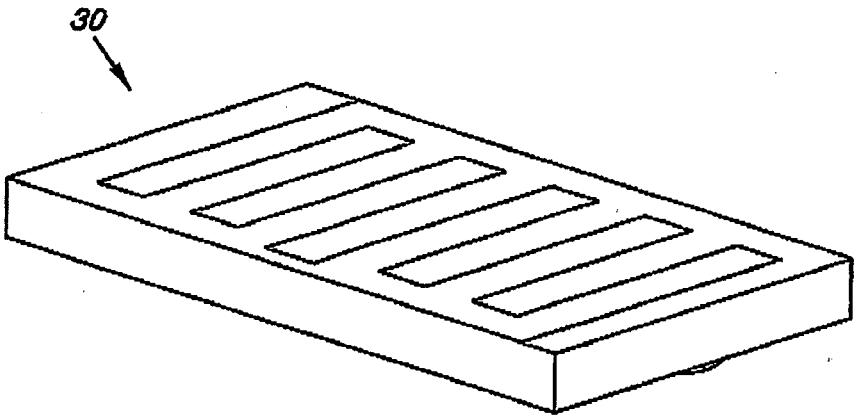


*Fig. 10A*

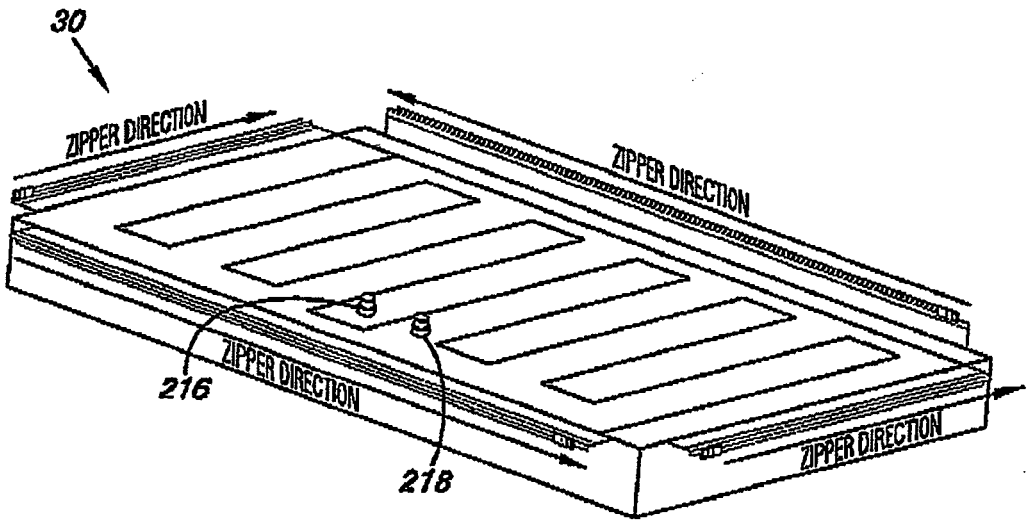


*Fig. 10B*

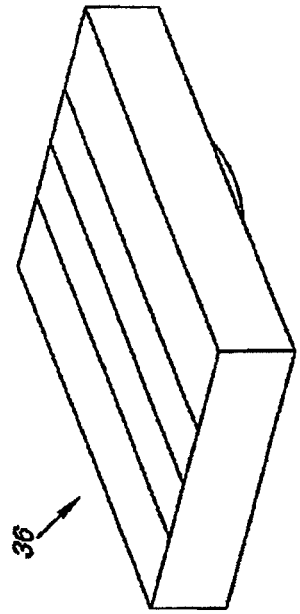


Fig. 12A

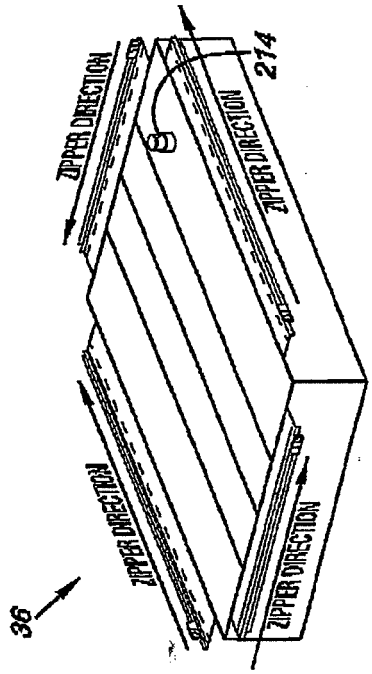


Fig. 12B

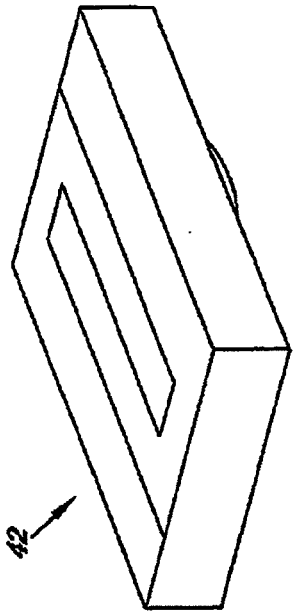


Fig. 11A

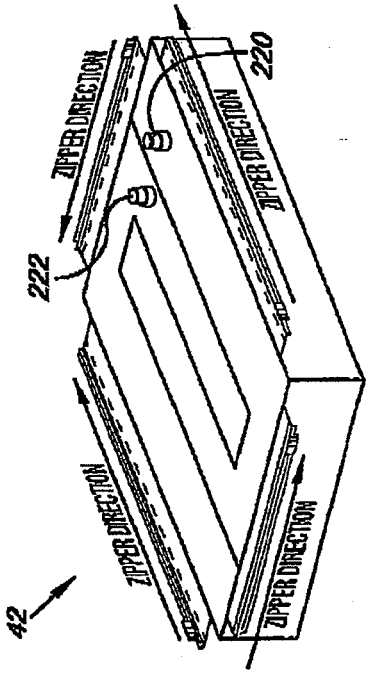


Fig. 11B

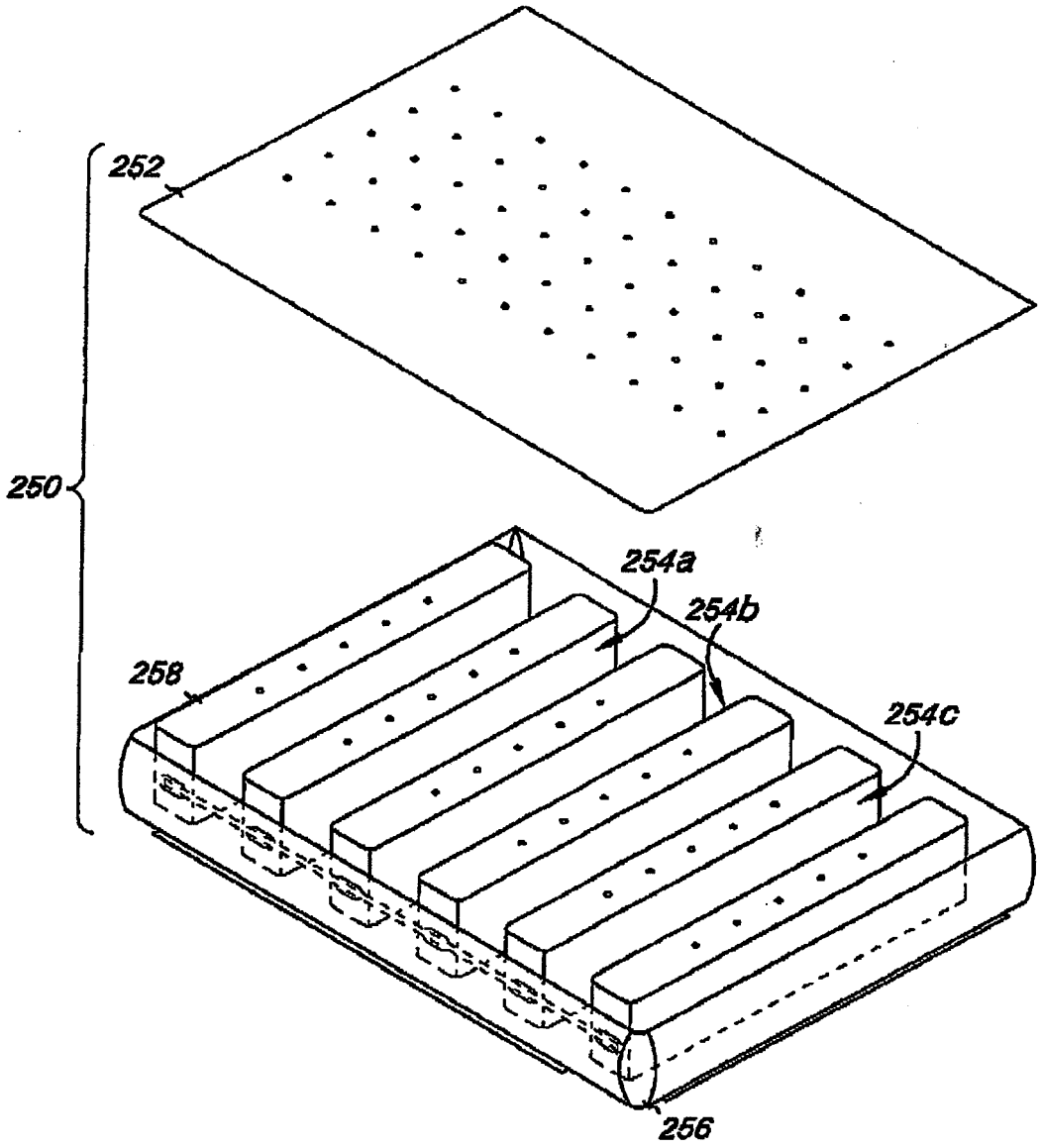


*Fig. 13*

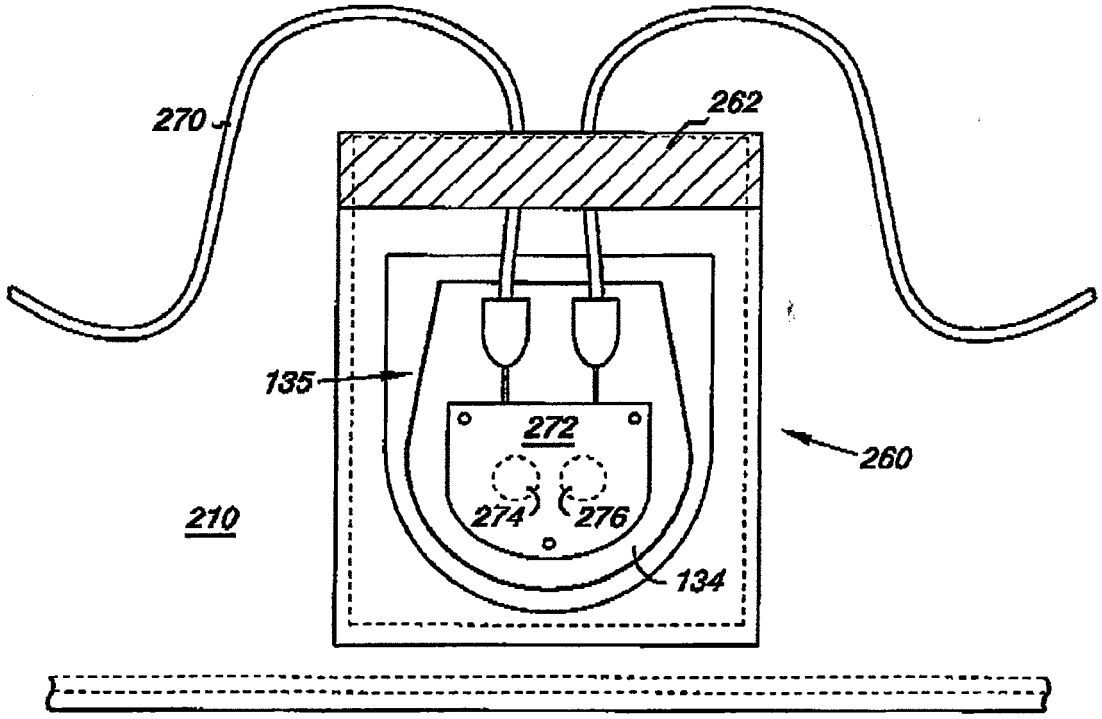


*Fig. 14*

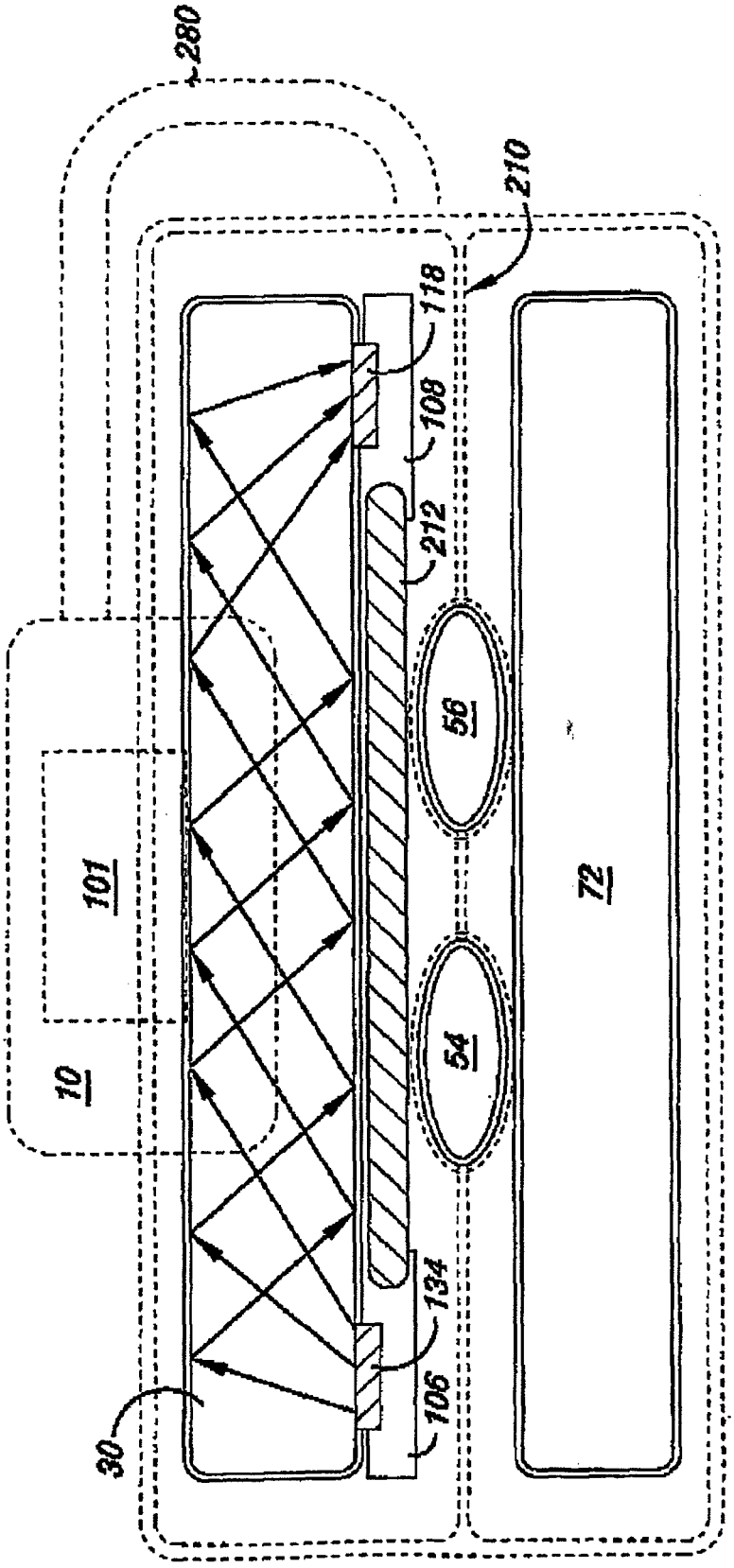


Fig. 15

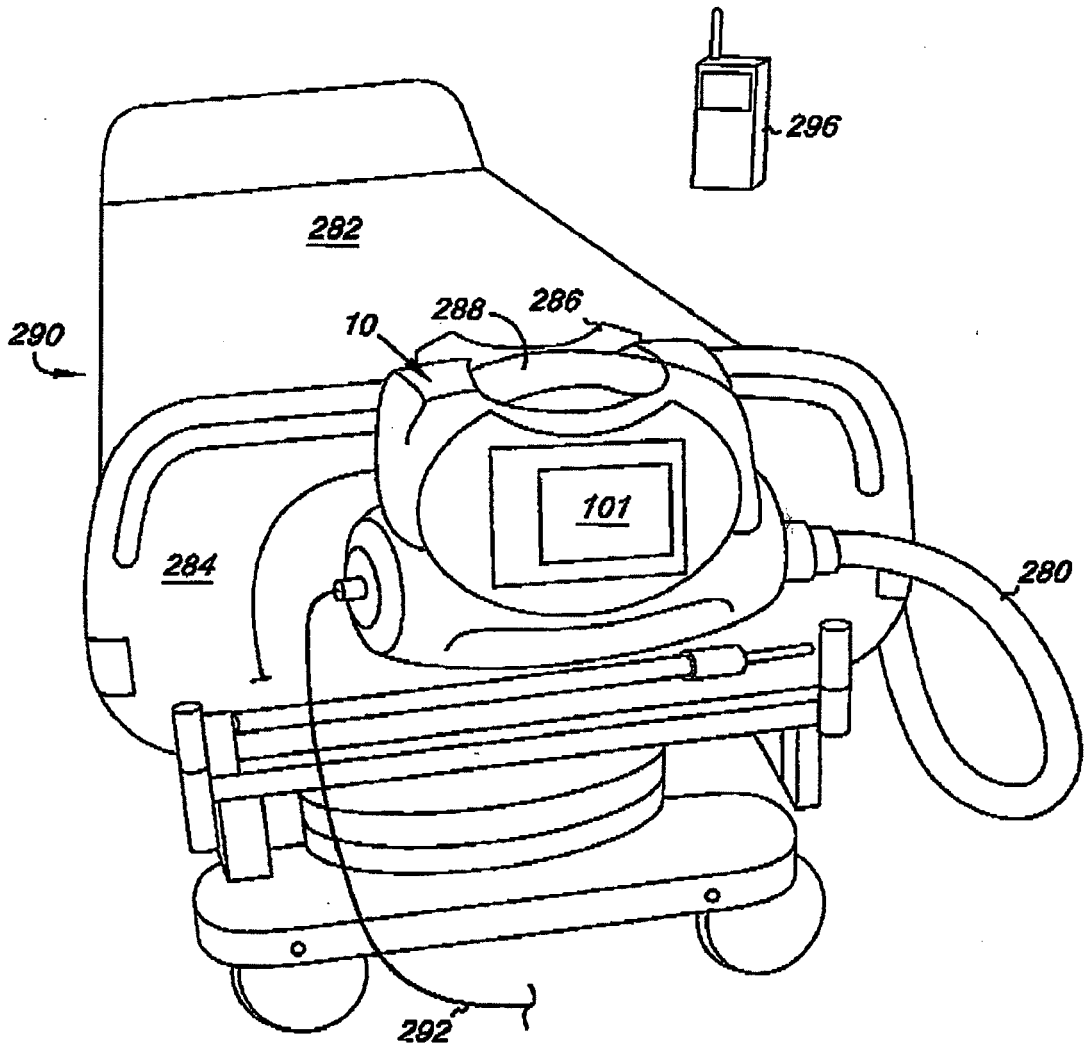


*Fig. 16*