REPLACEMENT SHEET
04 SEP 2006
REPLACEMENT SHEET
20 DEC 2006

Figure 1

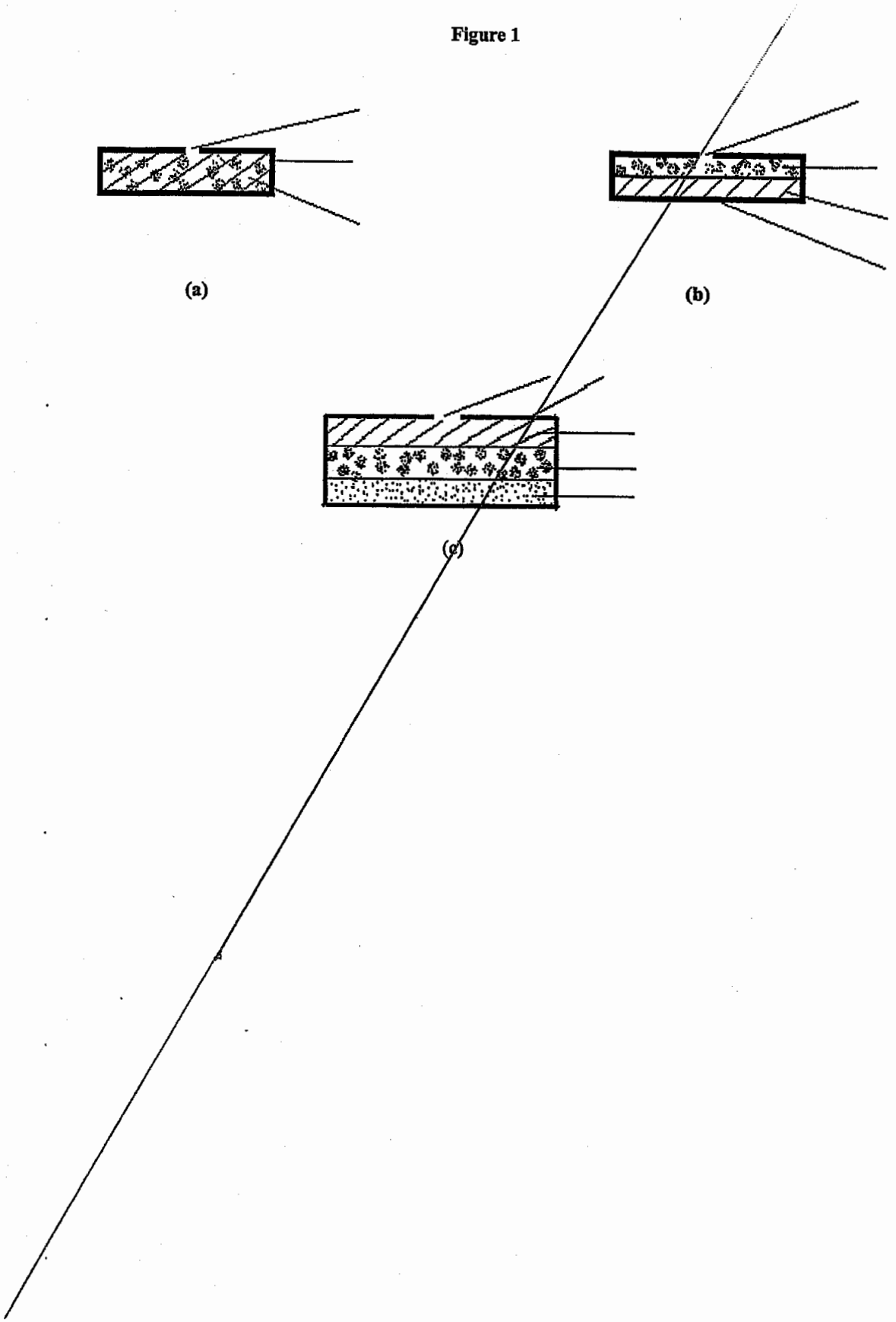

REPLACEMENT SHEET
04 SEP 2006
REPLACEMENT SHEET
20 DEC 2006

Figure 2

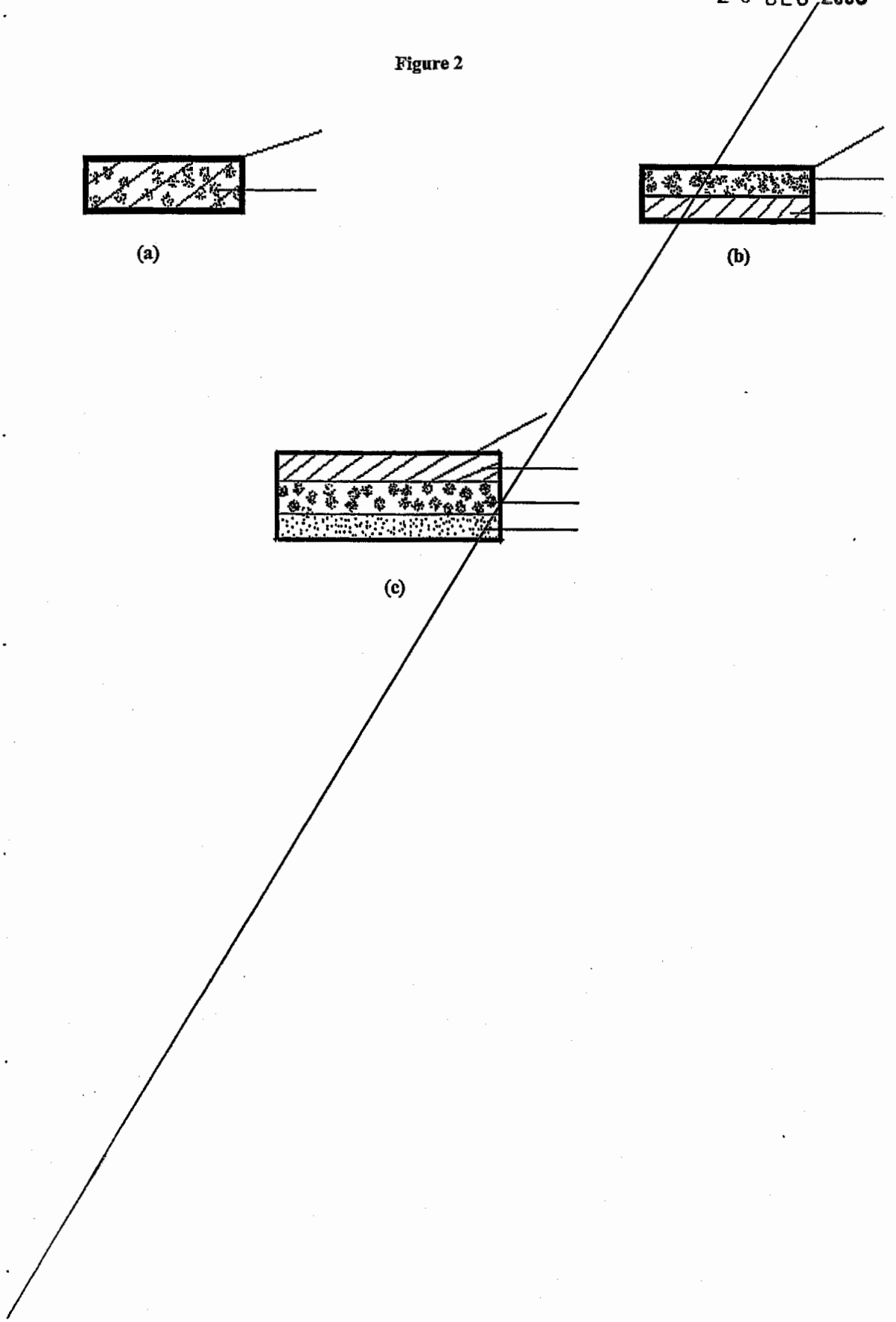

REPLACEMENT SHEET
04 SEP 2006
REPLACEMENT SHEET
20 DEC 2006

Figure 1 of 5

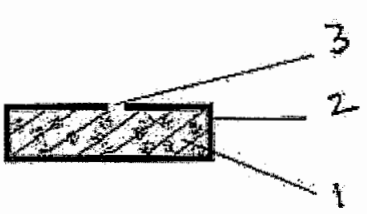


(a)

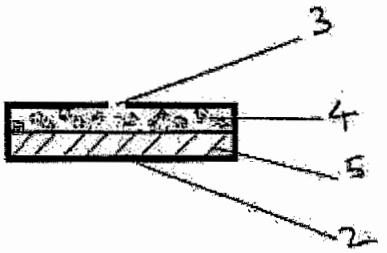


(b)

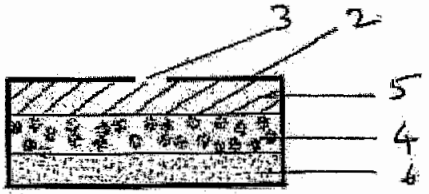


(c)

REPLACEMENT SHEET
04 SEP 2006
REPLACEMENT SHEET
20 DEC 2006

Figure 2 of 5




(a)

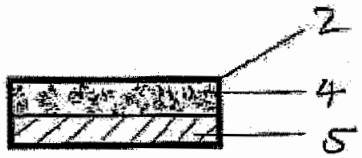


(b)

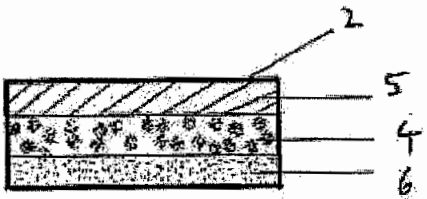


(c)