(12) INTERNATIONAL APPLICATION PUBLISHED UNDER THE PATENT COOPERATION TREATY (PCT)

(19) World Intellectual Property Organization
International Bureau

(43) International Publication Date
14 July 2005 (14.07.2005)

PCT

(10) International Publication Number
WO 2005/064652 A1

(51) International Patent Classification[7]: H01L 21/00

(21) International Application Number:
PCT/US2004/043740

(22) International Filing Date:
21 December 2004 (21.12.2004)

(25) Filing Language: English

(26) Publication Language: English

(30) Priority Data:
10/746,114 23 December 2003 (23.12.2003) US
10/816,337 31 March 2004 (31.03.2004) US

(71) Applicant *(for all designated States except US)*: **LAM RESEARCH CORPORATION** [US/US]; 4650 Cushing Parkway, Fremont, CA 94538 (US).

(72) Inventors; and

(75) Inventors/Applicants *(for US only)*: **DE LARIOS, John, M.** [US/US]; 941 Loma Verde, Palo Alto, CA 94303 (US). **OWCZARZ, Aleksander** [US/US]; 7523 Deveron Cr., San Jose, CA 95135 (US). **SCHOEPP, Alan** [US/US]; 10010 Highway 9, Ben Lomond, CA 95005 (US). **REDEKER, Fritz** [US/US]; 1801 Sioux Drive, Fremont, CA 94539 (US).

(74) Agent: **HSU, Michael, K.**; Martine & Penilla, LLP, 710 Lakeway Drive, Suite 200, Sunnyvale, CA 94085 (US).

(81) Designated States *(unless otherwise indicated, for every kind of national protection available)*: AE, AG, AL, AM, AT, AU, AZ, BA, BB, BG, BR, BW, BY, BZ, CA, CH, CN, CO, CR, CU, CZ, DE, DK, DM, DZ, EC, EE, EG, ES, FI, GB, GD, GE, GH, GM, HR, HU, ID, IL, IN, IS, JP, KE, KG, KP, KR, KZ, LC, LK, LR, LS, LT, LU, LV, MA, MD, MG, MK, MN, MW, MX, MZ, NA, NI, NO, NZ, OM, PG, PH, PL, PT, RO, RU, SC, SD, SE, SG, SK, SL, SY, TJ, TM, TN, TR, TT, TZ, UA, UG, US, UZ, VC, VN, YU, ZA, ZM, ZW.

(84) Designated States *(unless otherwise indicated, for every kind of regional protection available)*: ARIPO (BW, GH, GM, KE, LS, MW, MZ, NA, SD, SL, SZ, TZ, UG, ZM, ZW), Eurasian (AM, AZ, BY, KG, KZ, MD, RU, TJ, TM),

[Continued on next page]

(54) Title: APPARATUSES AND METHODS FOR CLEANING A SUBSTRATE

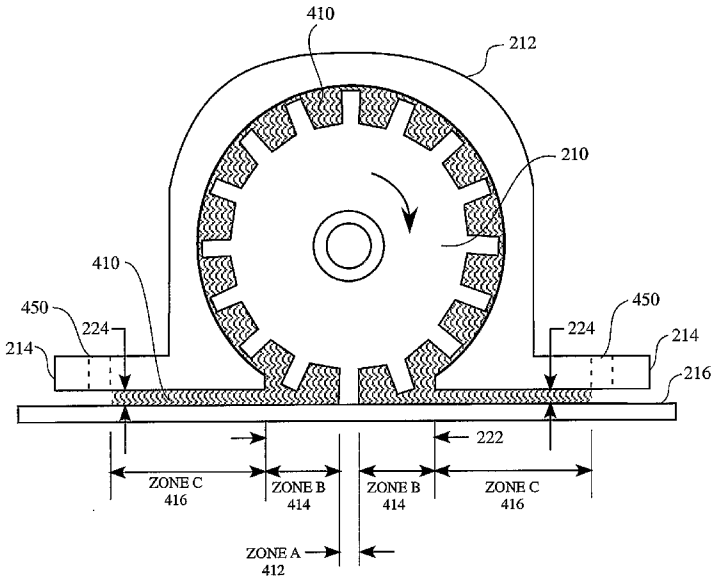

(57) Abstract: An apparatus for use in processing a substrate (216) includes a brush enclosure (212) extending over a length. The brush enclosure (212) is configured to be disposed over a surface of the substrate (216) and has an open region that is configured to be disposed in proximity to the substrate (216). The open region extends over the length of the brush enclosure (212) and enables foam (410) from within the brush enclosure (212) to contact the surface of the substrate (216). A substrate cleaning system and method for cleaning a substrate are also described.

WO 2005/064652 A1

European (AT, BE, BG, CH, CY, CZ, DE, DK, EE, ES, FI, FR, GB, GR, HU, IE, IS, IT, LT, LU, MC, NL, PL, PT, RO, SE, SI, SK, TR), OAPI (BF, BJ, CF, CG, CI, CM, GA, GN, GQ, GW, ML, MR, NE, SN, TD, TG).

Published:

— *with international search report*

— *before the expiration of the time limit for amending the claims and to be republished in the event of receipt of amendments*

For two-letter codes and other abbreviations, refer to the "Guidance Notes on Codes and Abbreviations" appearing at the beginning of each regular issue of the PCT Gazette.