(12) INTERNATIONAL APPLICATION PUBLISHED UNDER THE PATENT COOPERATION TREATY (PCT)

(19) World Intellectual Property Organization
International Bureau

PCT

(43) International publication date
4 October 2001 (04.10.2001)

(10) International publication number
WO 01/73177 A1

(51) International patent classification[7]: D03C 3/08, 3/20

(21) International application number: PCT/CH01/00142

(22) International filing date: 7 March 2001 (07.03.2001)

(25) Language of filing: German

(26) Language of publication: German

(30) Data relating to the priority:
584/00 27 March 2000 (27.03.2000) CH

(71) Applicant *(for all designated States except US)*: TEXTILMA AG [CH/CH]; Seestrasse 97, CH-6052 Hergiswil (CH).

(72) Inventor; and
(75) Inventor/Applicant *(US only)*: REITER, Joseph, Nikolaus [BE/BE]; Heuem 2, B-4783 St.Vith (BE).

(74) Attorney: SCHMAUDER & PARTNER AG; Zwängiweg 7, CH-8038 Zurich (CH).

(81) Designated states *(national)*: AE, AG, AL, AM, AT, AU, AZ, BA, BB, BG, BR, BY, BZ, CA, CH, CN, CO, CR, CU, CZ, DE, DK, DM, DZ, EE, ES, FI, GB, GD, GE, GH, GM, HR, HU, ID, IL, IN, IS, JP, KE, KG, KP, KR, KZ, LC, LK, LR, LS, LT, LU, LV, MA, MD, MG, MK, MN, MW, MX, MZ, NO, NZ, PL, PT, RO, RU, SD, SE, SG, SI, SK, SL, TJ, TM, TR, TT, TZ, UA, UG, US, UZ, VN, YU, ZA, ZW.

[continued on next page]

As printed

(54) Title: JACQUARD MACHINE

(54) Bezeichnung: JACQUARDMASCHINE

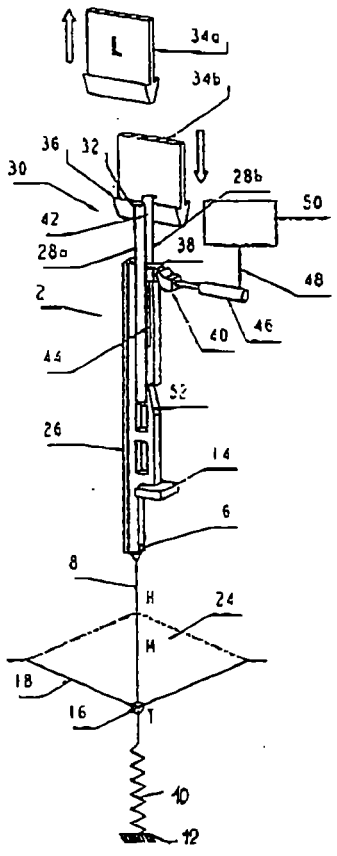

(57) Abstract: Each lifter (2) has a displacement member (4) which can be connected to at least one directable thread (18) and which has two spring arms (28a, 28b) that can be coupled to lifter blades (34a, 34b) which move up and down. Said lifter blades are not attached to the spring arms (28a, 28b) in the starting position of the latter. In the lower shed position (T), the spring arms (28a, 28b) can be displaced into position for coupling with the lifter blades (34a, 34b) using an actuator (40). The displacement member (4) can be locked in the upper shed position using the same actuator (40). To improve the jacquard machine, the switching member (38) is positioned at the end of a spring tongue (44) that is aligned in the direction of displacement and is fixed to the displacement member (4, 4a) outside the spring arms (28a, 28b). The actuator (40, 40a) is located laterally outside the spring arms (28a, 28b) in such a way that it acts transversally in relation to the latter.

(57) Zusammenfassung: Jede Platine (2) weist ein Verschiebeglied (4) auf, das einerseits mit mindestens einem steuerbaren Faden (18) verbindbar ist und andererseits zwei Federarme (28a, 28b) trägt, die mit auf- und abgehenden Hubmessern (34a, 34b) kuppelbar sind. In einer Grundstellung der Federarme (28a, 28b) sind diese frei von den Hubmessern. In Tieffachstellung (T) können die Federarme (28a, 28b) mittels eines Aktuators (40) in eine Kupplungsstellung für die Hubmesser (34a, 34b) bewegt werden. Das Verschiebeglied (4) ist in Hochfachstellung mittels des gleichen Aktuators (40) verrastbar. Zur Verbesserung der Jacquardmaschine ist das Schaltglied (38) am Ende einer in Verschieberichtung ausgerichteten und am Verschiebeglied (4, 4a) ausserhalb der Federarme (28a, 28b) befestigten Federzunge (44) angeordnet, wobei der Aktuator (40, 40a) seitlich ausserhalb der Federarme (28a, 28b) und quer dazu wirkend angeordnet ist.

WO 01/73177 A1

162162

G00002

(84) **Designated states** *(regional)*: ARIPO Patent (GH, GM, KE, LS, MW, MZ, SD, SL, SZ, TZ, UG, ZW), Eurasian Patent (AM, AZ, BY, KG, KZ, MD, RU, TJ, TM), European Patent (AT, BE, CH, CY, DE, DK, ES, FI, FR, GB, GR, IE, IT, LU, MC, NL, PT, SE, TR), OAPI Patent (BF, BJ, CF, CG, CI, CM, GA, GN, GW, ML, MR, NE, SN, TD, TG).

Published:
- *With the International Search Report.*

For an explanation of the two-letter codes and the other abbreviations, reference is made to the explanations ("Guidance Notes on Codes and Abbreviations") at the beginning of each regular edition of the PCT Gazette