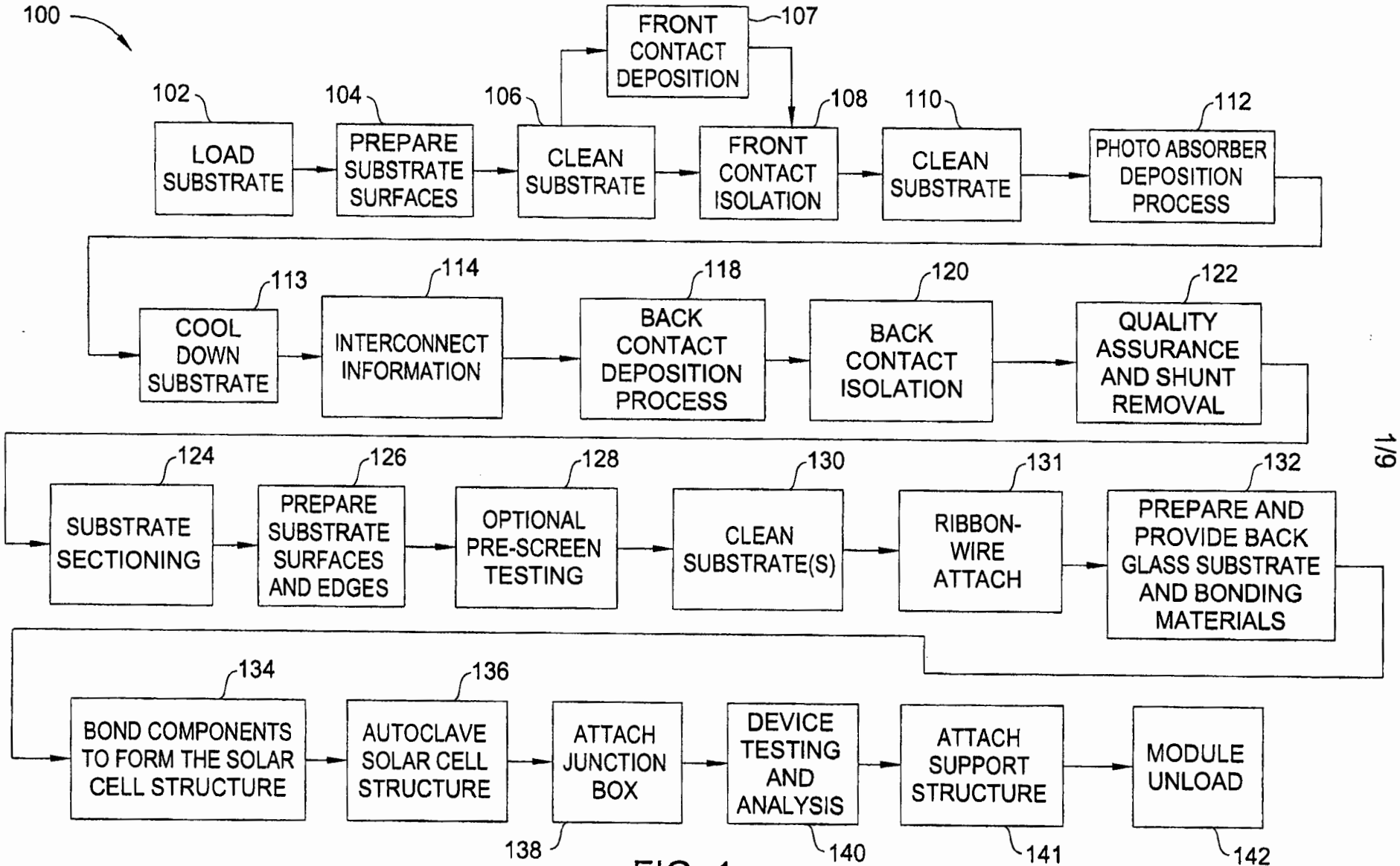
100
LOAD SUBSTRATE
102
PREPARE SUBSTRATE SURFACES
104
CLEAN SUBSTRATE
106
FRONT CONTACT DEPOSITION
107
FRONT CONTACT ISOLATION
108
CLEAN SUBSTRATE
110
PHOTO ABSORBER DEPOSITION PROCESS
112
COOL DOWN SUBSTRATE
113
INTERCONNECT INFORMATION
114
BACK CONTACT DEPOSITION PROCESS
118
BACK CONTACT ISOLATION
120
QUALITY ASSURANCE AND SHUNT REMOVAL
122
SUBSTRATE SECTIONING
124
PREPARE SUBSTRATE SURFACES AND EDGES
126
OPTIONAL PRE-SCREEN TESTING
128
CLEAN SUBSTRATE(S)
130
RIBBON-WIRE ATTACH
131
PREPARE AND PROVIDE BACK GLASS SUBSTRATE AND BONDING MATERIALS
132
BOND COMPONENTS TO FORM THE SOLAR CELL STRUCTURE
134
AUTOCLAVE SOLAR CELL STRUCTURE
136
ATTACH JUNCTION BOX
138
DEVICE TESTING AND ANALYSIS
140
ATTACH SUPPORT STRUCTURE
141
MODULE UNLOAD
142

FIG. 1

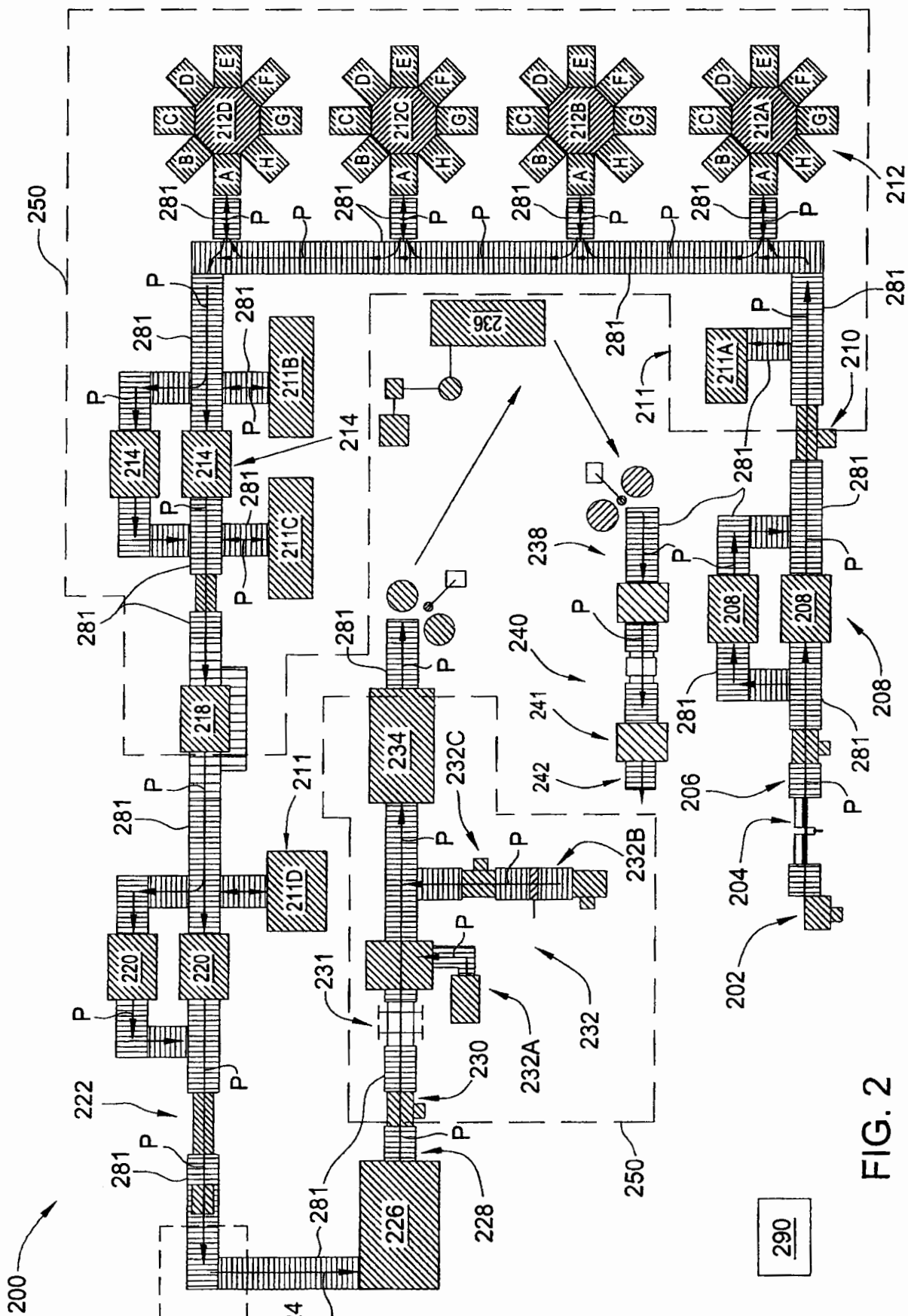
200
202
204
206
208
210
211
211A
211B
211C
211D
212
212A
212B
212C
212D
214
218
220
222
224
226
228
230
231
232
232A
232B
232C
234
236
238
240
241
242
250
281
290
A
B
C
D
E
F
G
H
P

FIG. 2

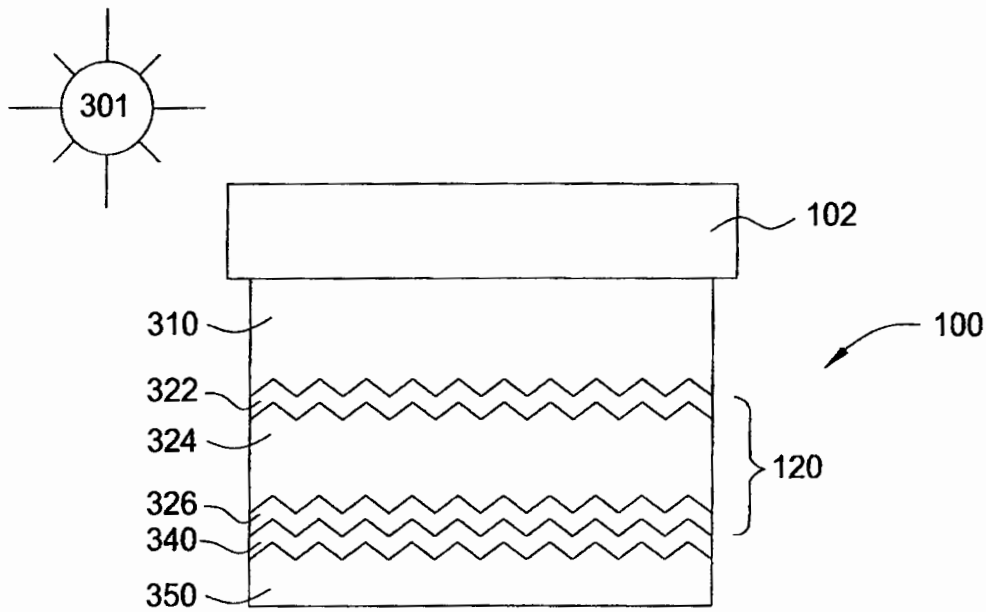
301
102
310
100
322
324
120
326
340
350

FIG. 3A

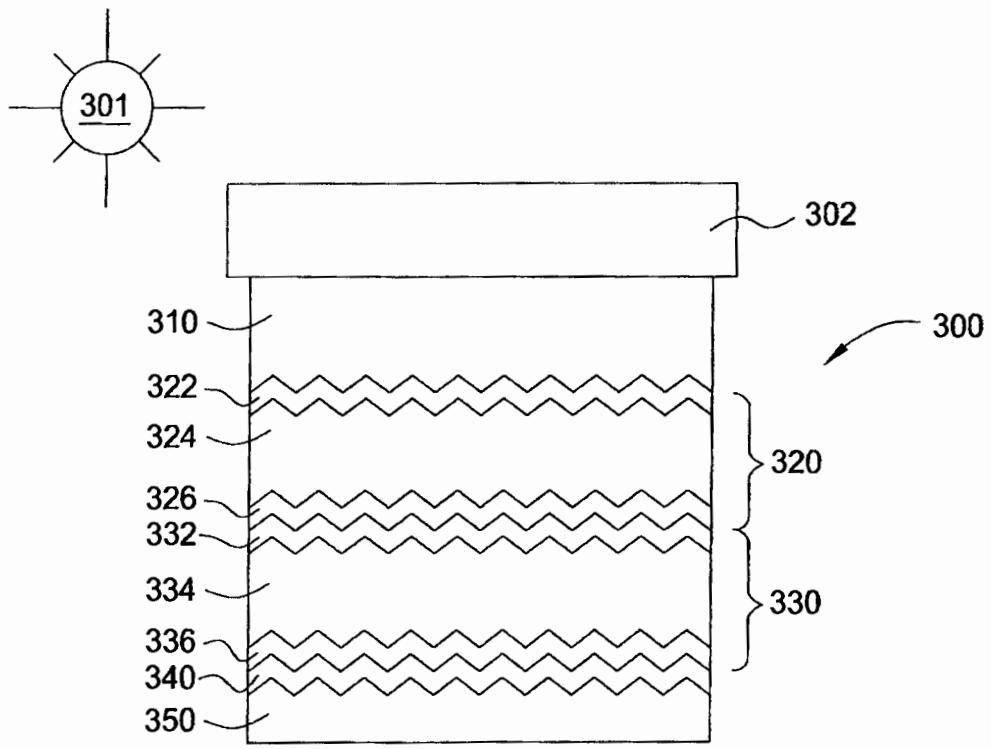
301
302
310
300
322
324
320
326
332
334
330
336
340
350

FIG. 3B

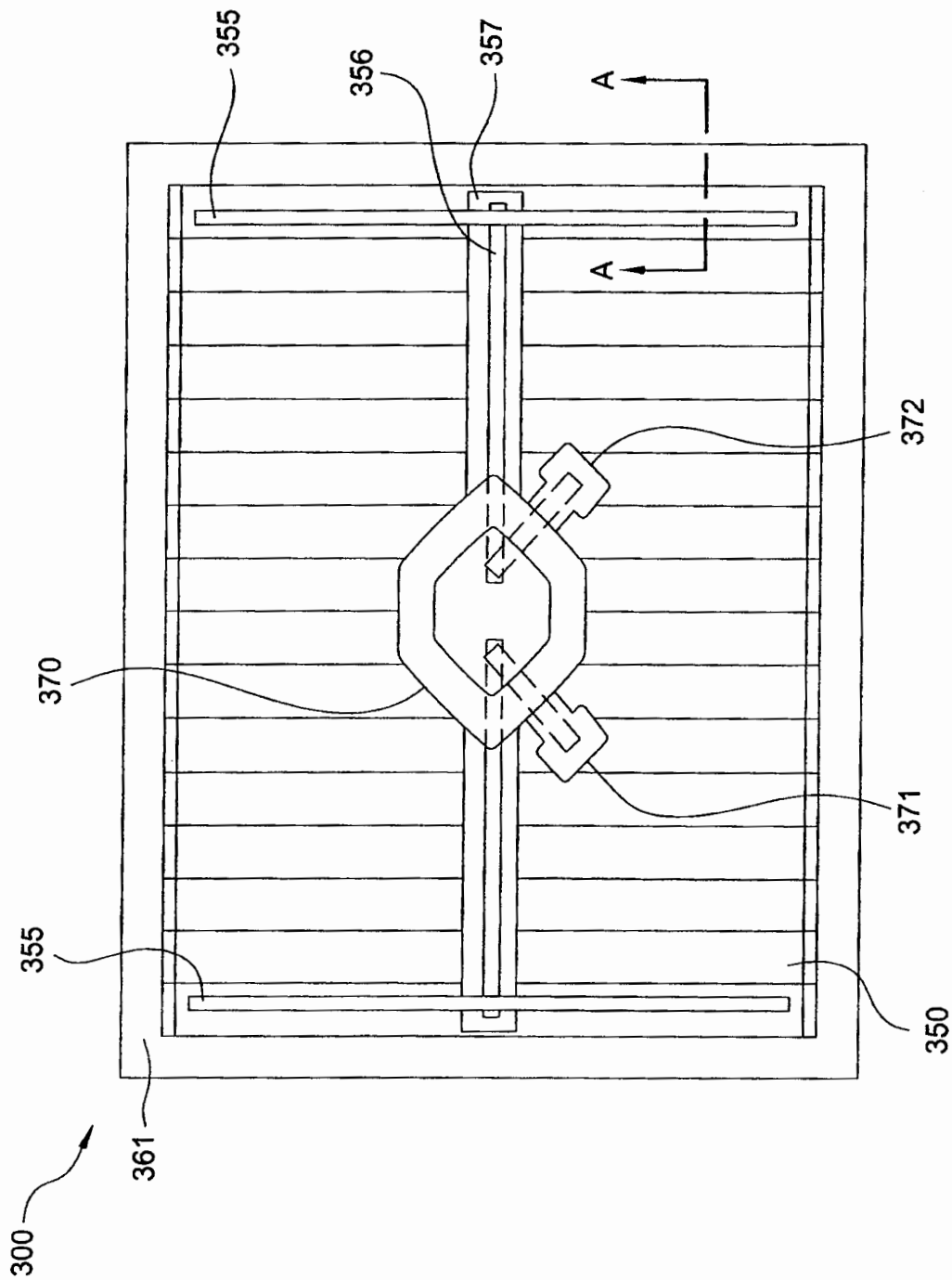

FIG. 3C

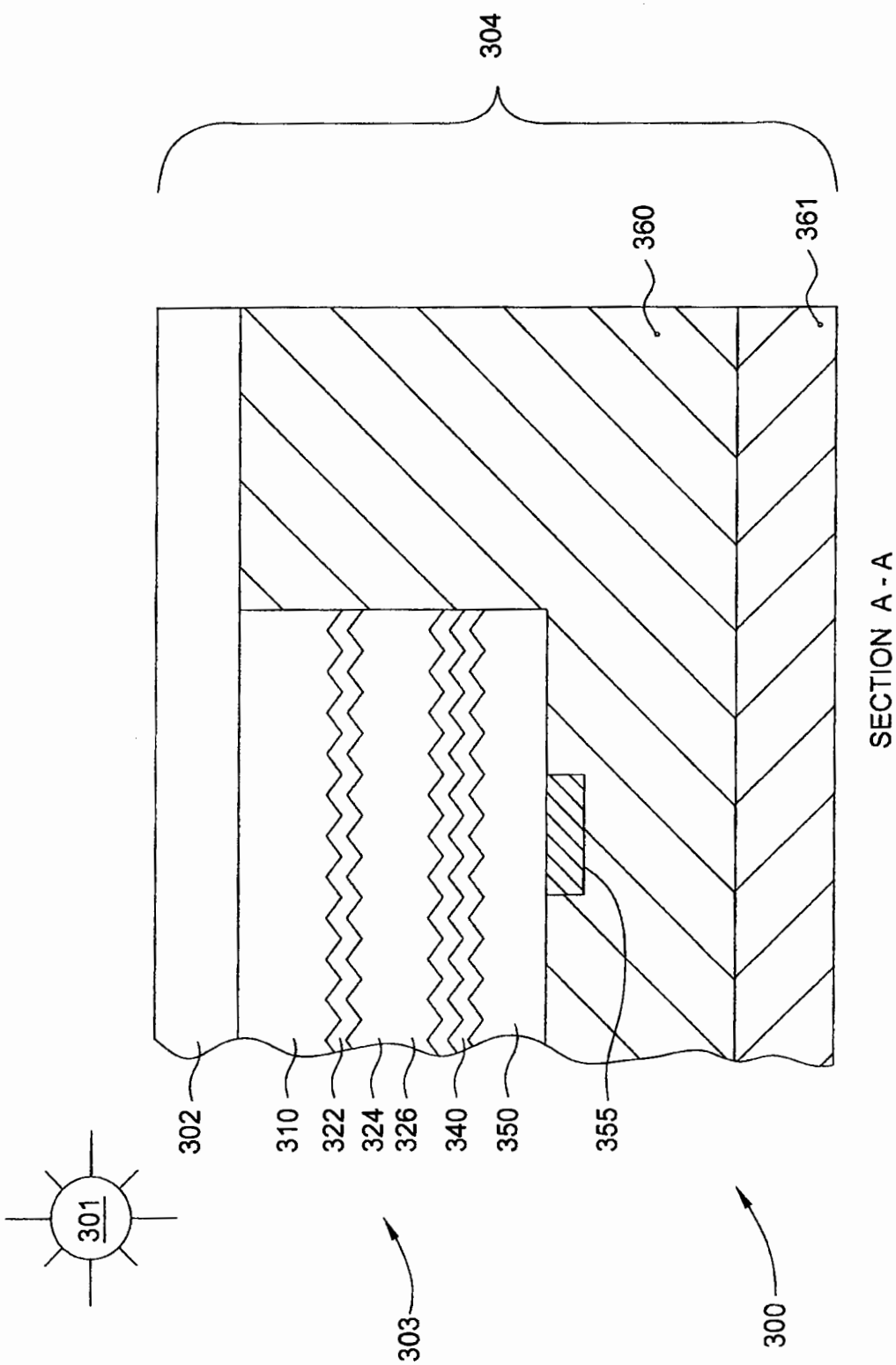
304
360
361
SECTION A - A
302
310
322
324
326
340
350
355
301
303
300

FIG. 3D

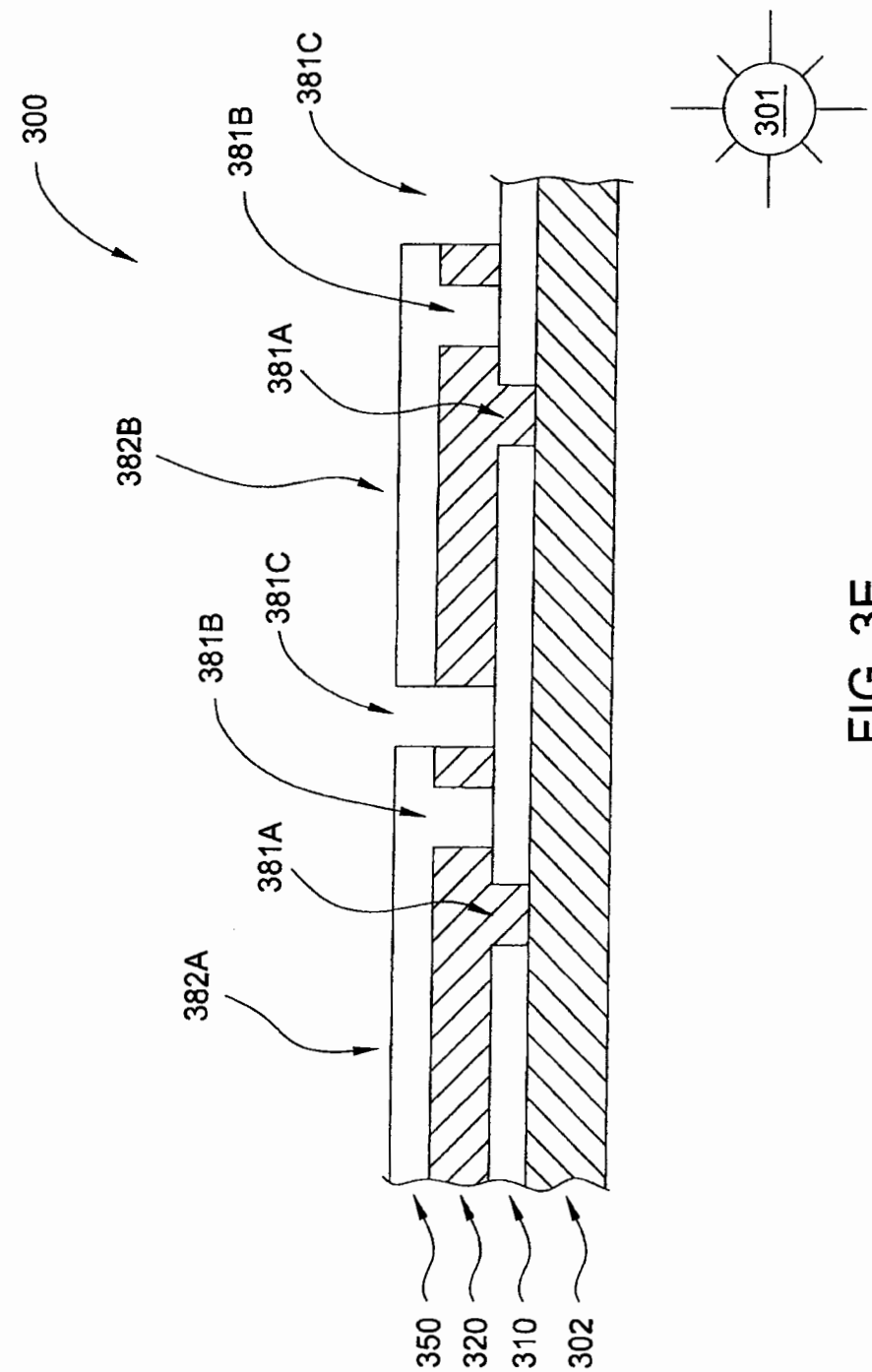
300
381C
381B
381A
382B
381C
381B
381A
382A
301
350
320
310
302

FIG. 3E

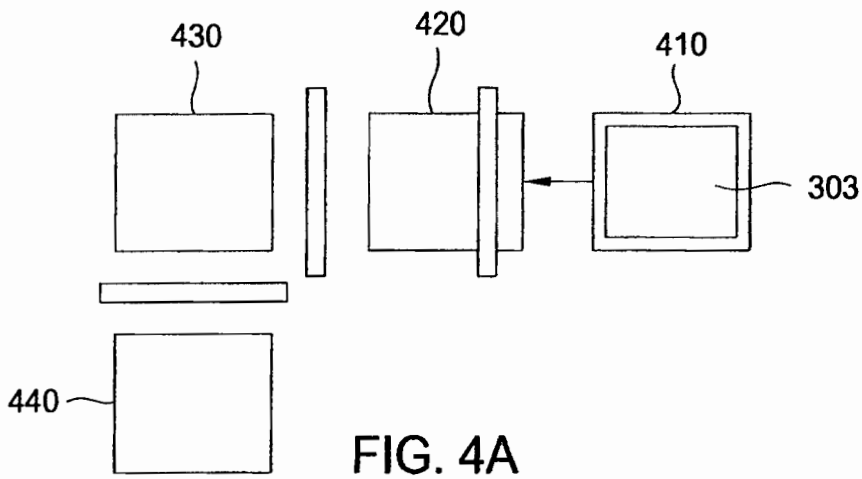

FIG. 4A

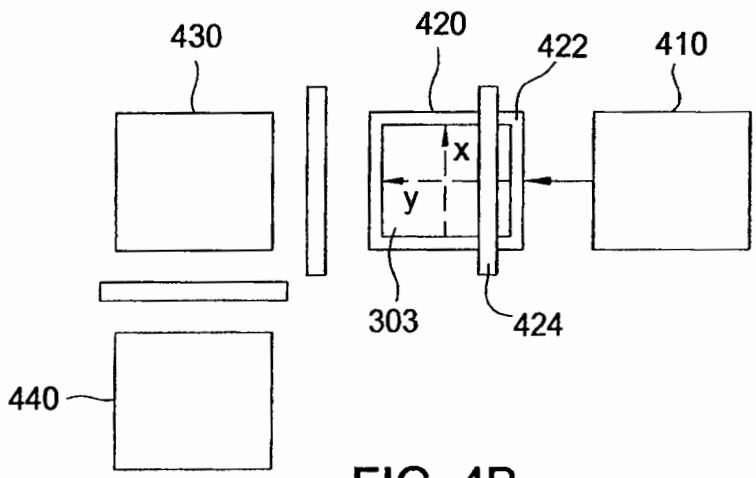

FIG. 4B

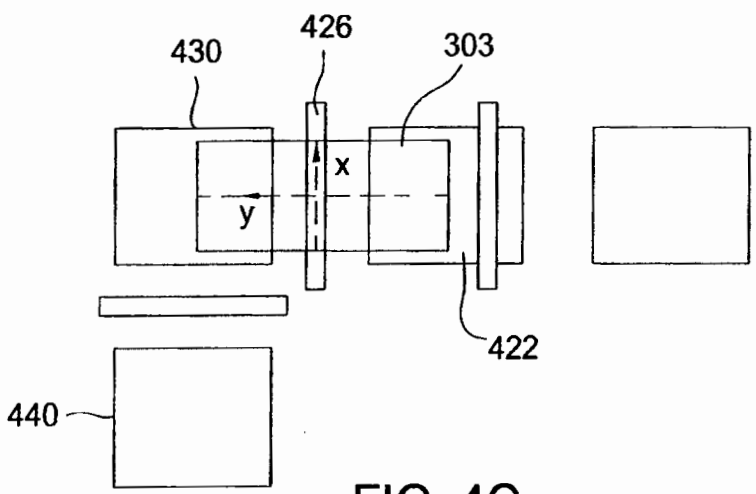

FIG. 4C

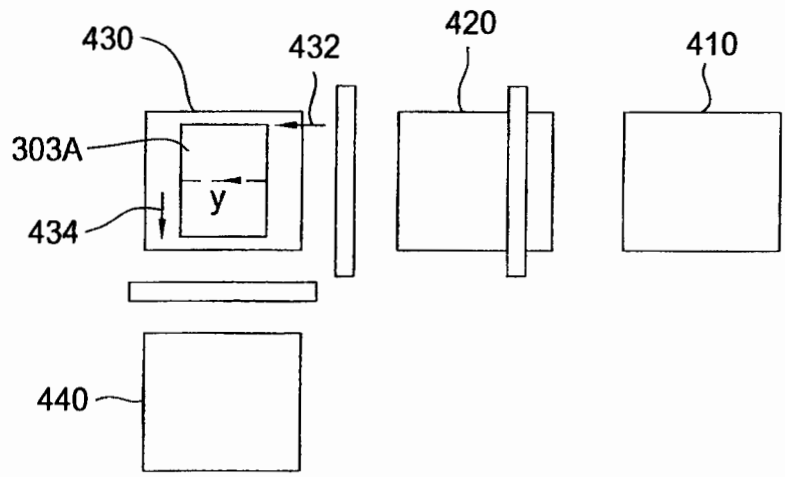

FIG. 4D

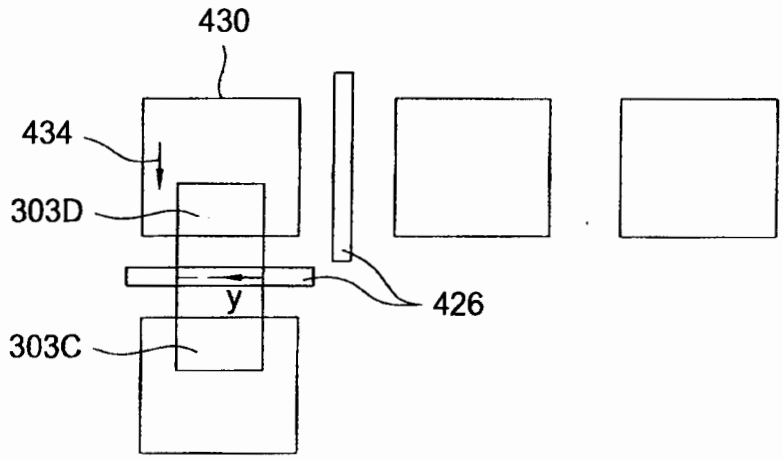

FIG. 4E

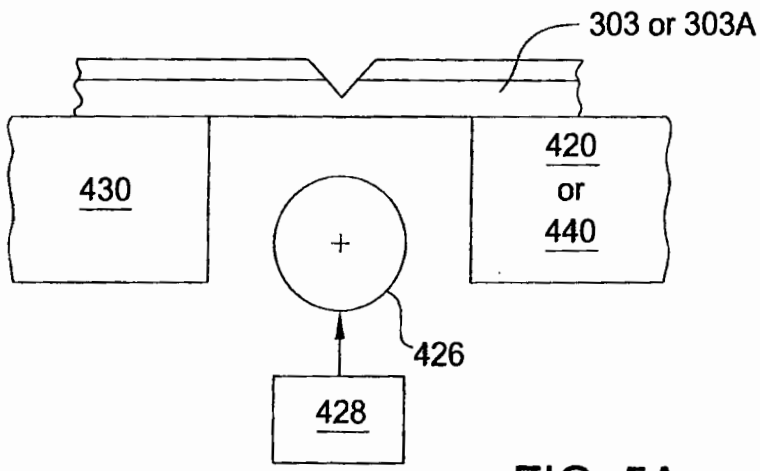

FIG. 5A

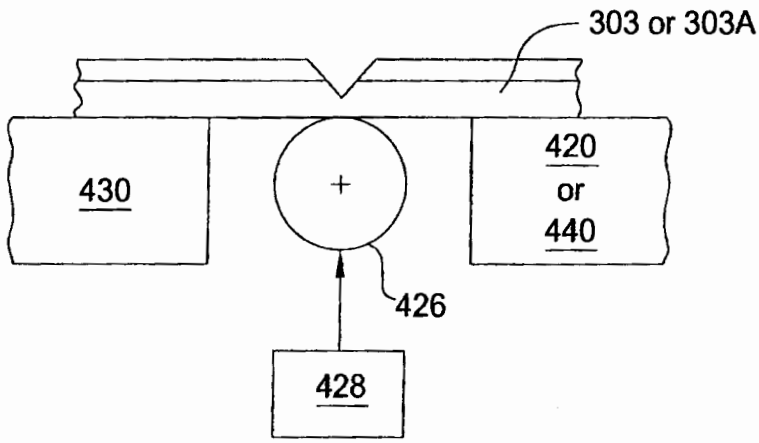

FIG. 5B

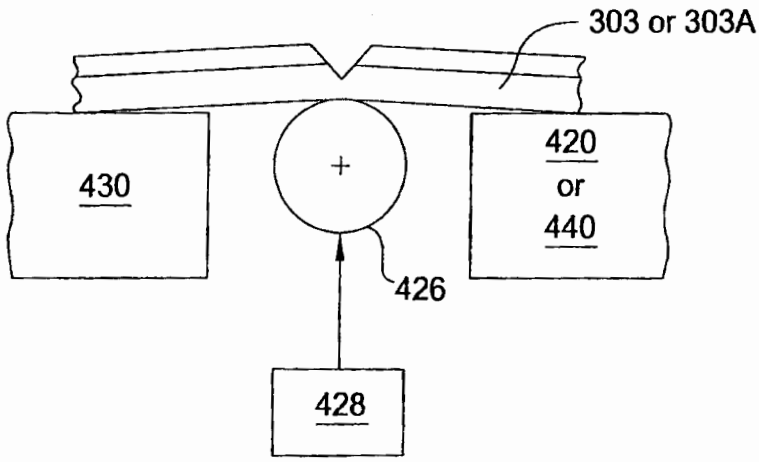

FIG. 5C