Fig. 1

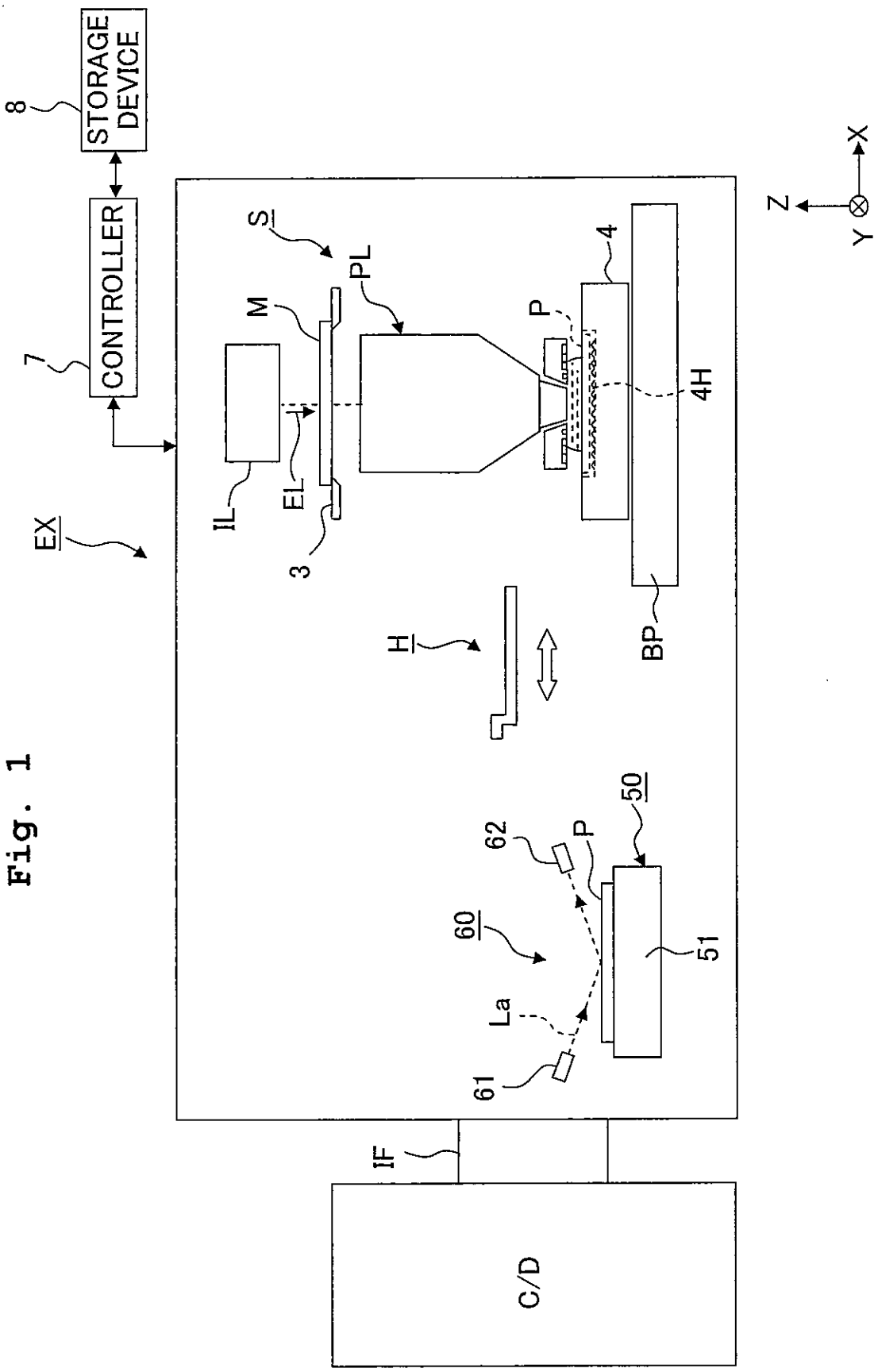
8
STORAGE DEVICE
7
CONTROLLER
EX
S
PL
M
P
4
4H
IL
EL
3
H
BP
62
P
50
60
51
La
61
IF
C/D
Z
X
Y

Fig. 2

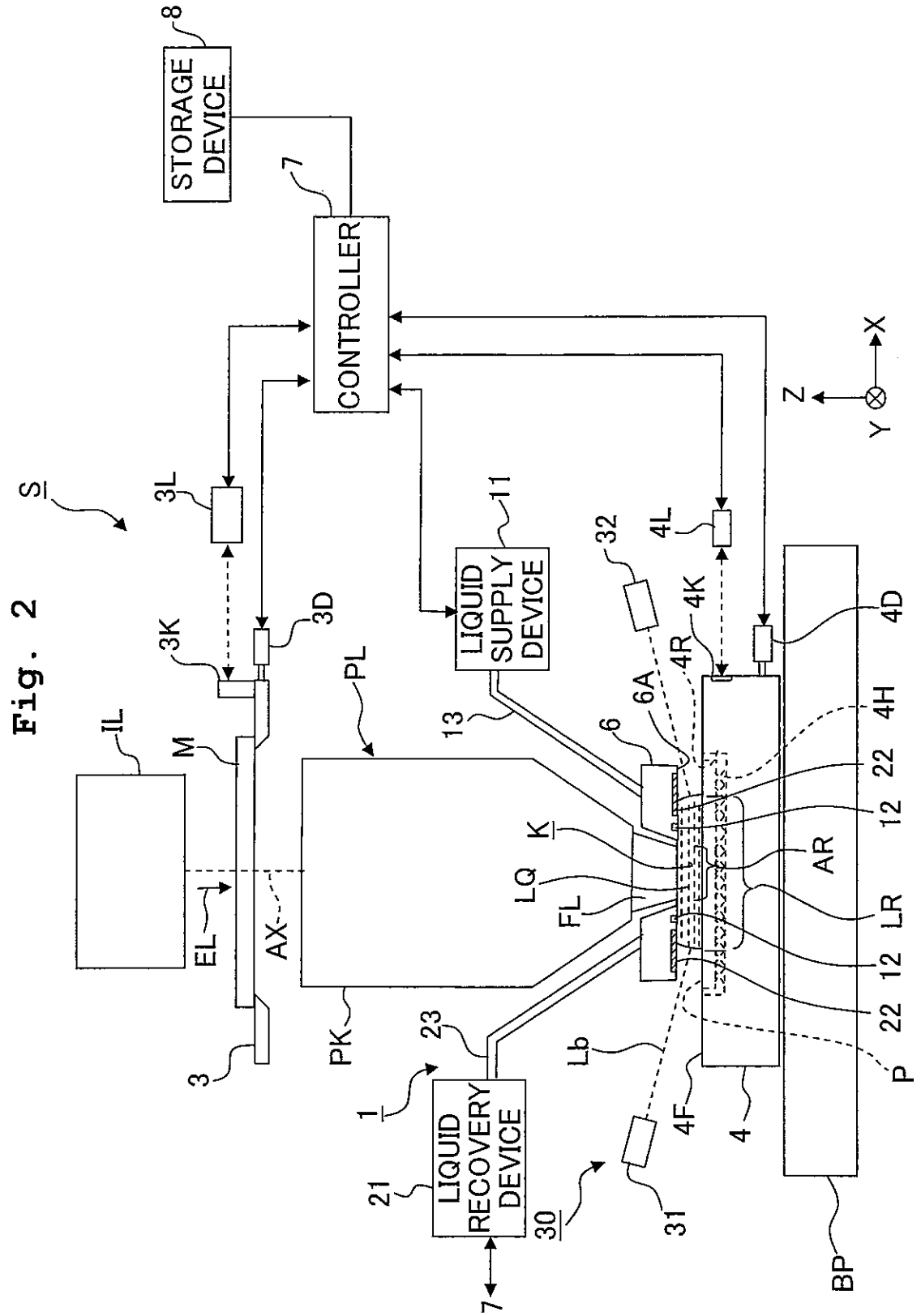
STORAGE DEVICE
8
7
CONTROLLER
S
3L
3K
3D
IL
M
EL
AX
3
PL
PK
LIQUID SUPPLY DEVICE
11
13
6
6A
4R
4K
4L
4D
32
4H
22
12
AR
LR
12
22
P
K
LQ
FL
Lb
4F
4
BP
23
1
LIQUID RECOVERY DEVICE
21
30
31
7
X
Y
Z

Fig. 3

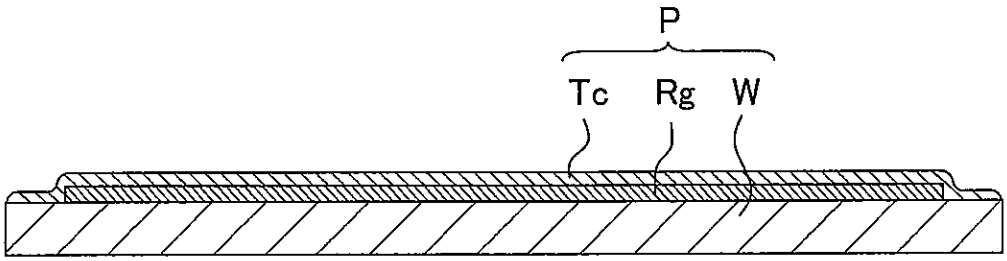

Fig. 4

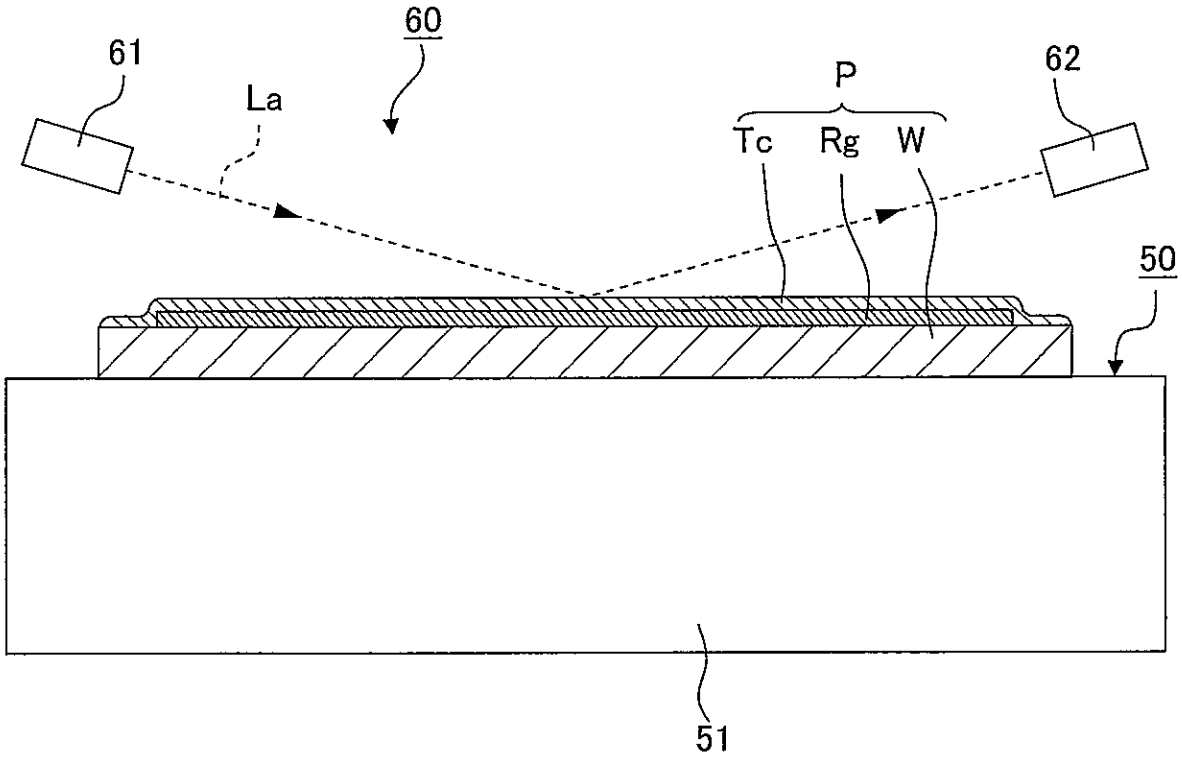

Fig. 5

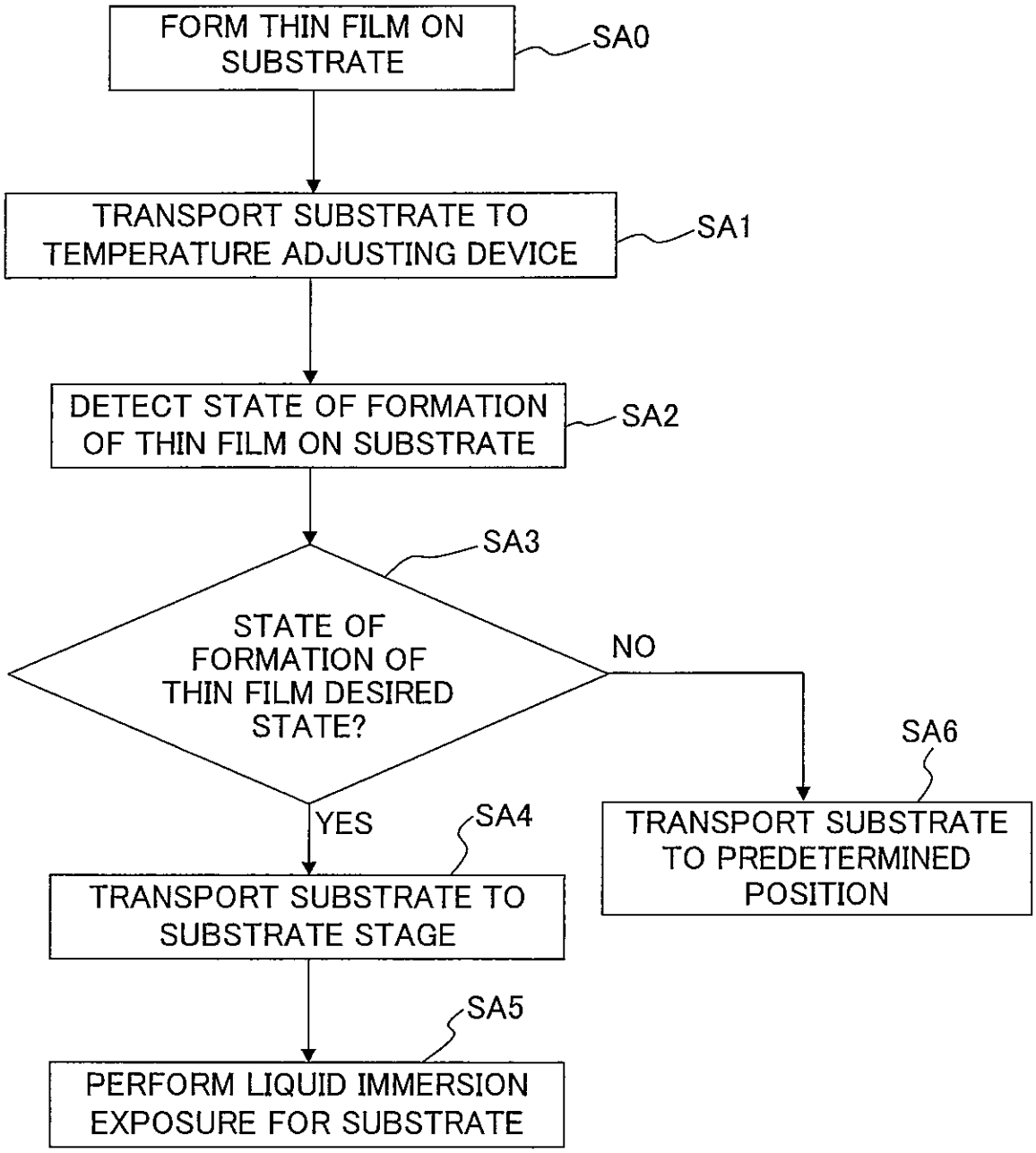
FORM THIN FILM ON SUBSTRATE
SA0
TRANSPORT SUBSTRATE TO TEMPERATURE ADJUSTING DEVICE
SA1
DETECT STATE OF FORMATION OF THIN FILM ON SUBSTRATE
SA2
SA3
STATE OF FORMATION OF THIN FILM DESIRED STATE?
NO
YES
SA4
SA6
TRANSPORT SUBSTRATE TO PREDETERMINED POSITION
TRANSPORT SUBSTRATE TO SUBSTRATE STAGE
SA5
PERFORM LIQUID IMMERSION EXPOSURE FOR SUBSTRATE

Fig. 6

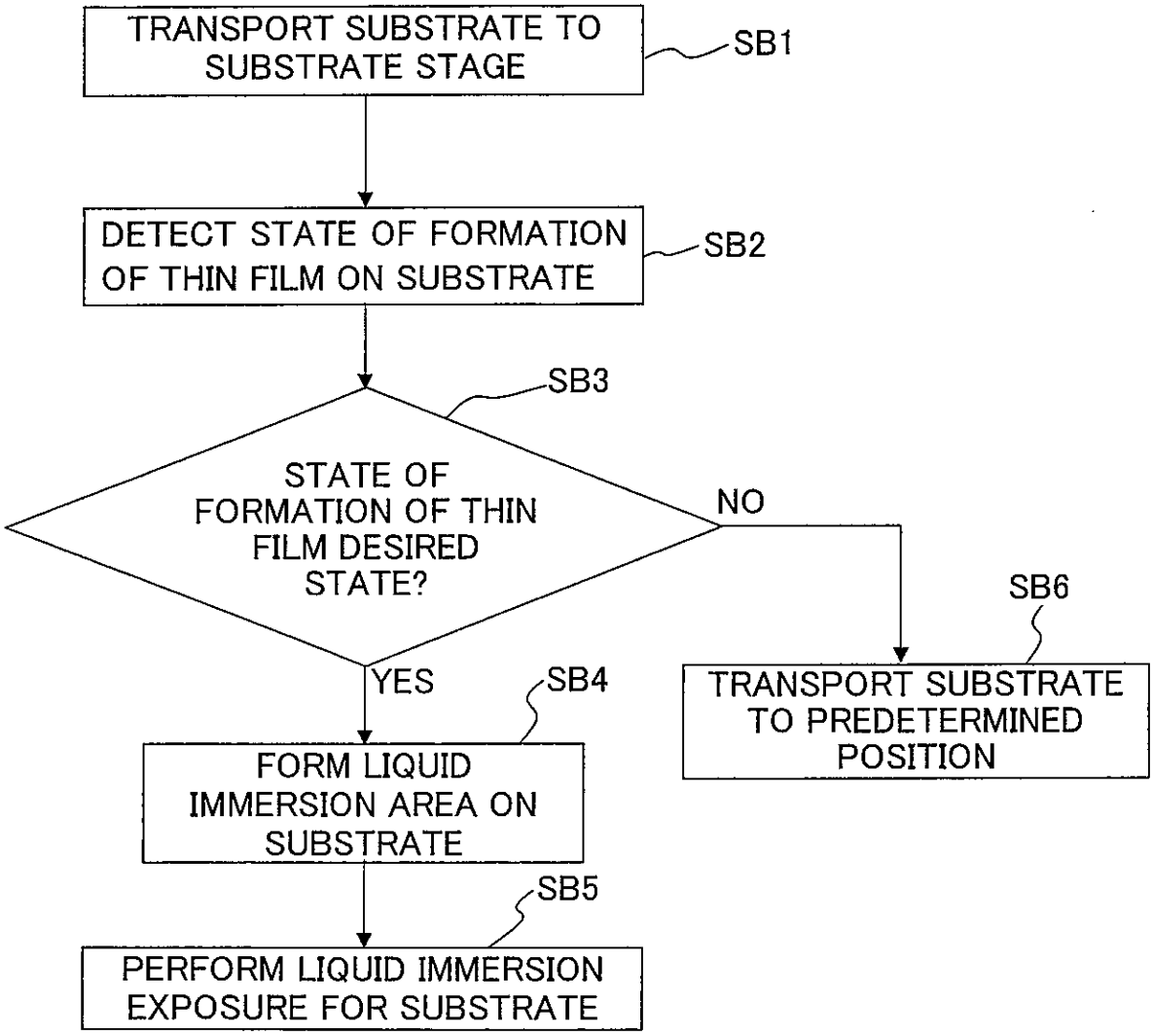
TRANSPORT SUBSTRATE TO SUBSTRATE STAGE
SB1
DETECT STATE OF FORMATION OF THIN FILM ON SUBSTRATE
SB2
SB3
STATE OF FORMATION OF THIN FILM DESIRED STATE?
NO
SB6
TRANSPORT SUBSTRATE TO PREDETERMINED POSITION
YES
SB4
FORM LIQUID IMMERSION AREA ON SUBSTRATE
SB5
PERFORM LIQUID IMMERSION EXPOSURE FOR SUBSTRATE

Fig. 7

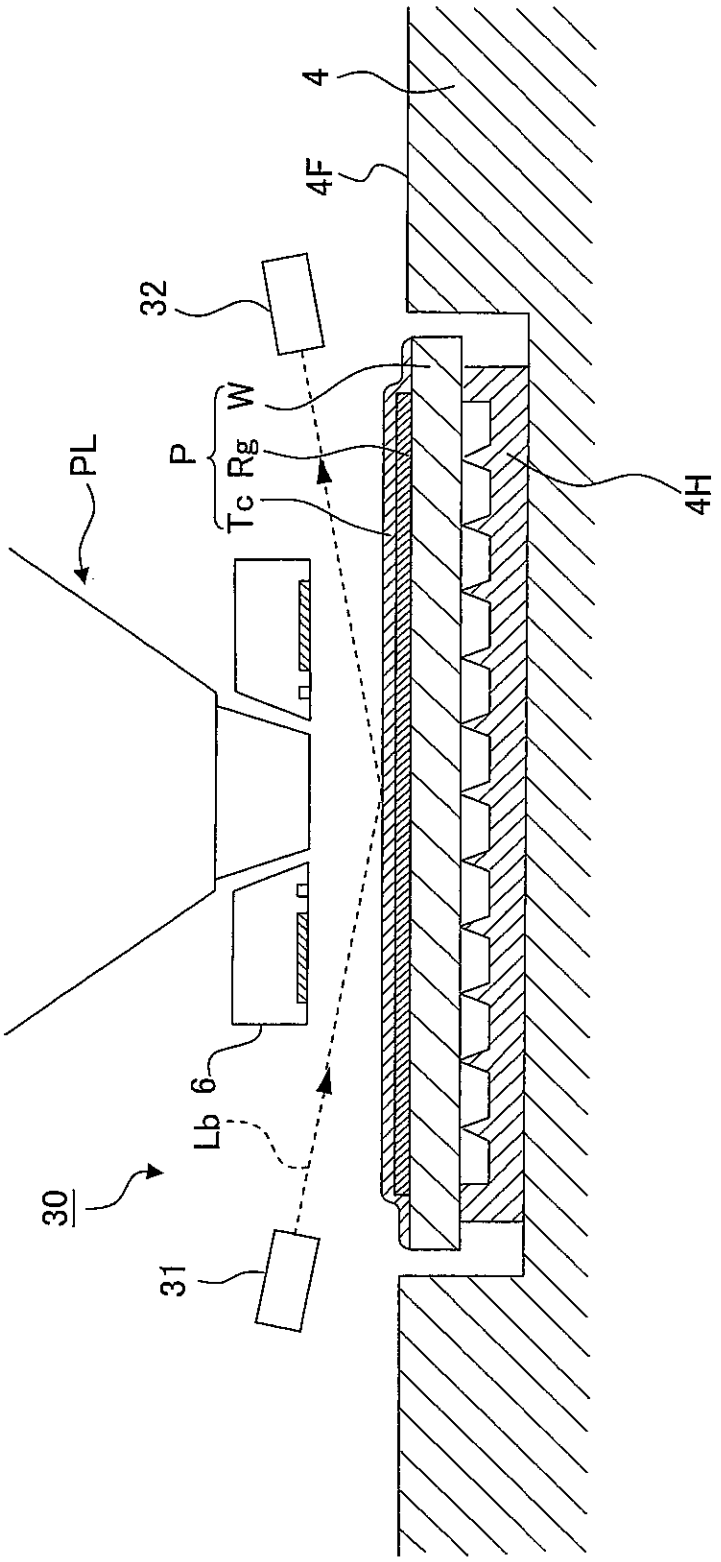

Fig. 8

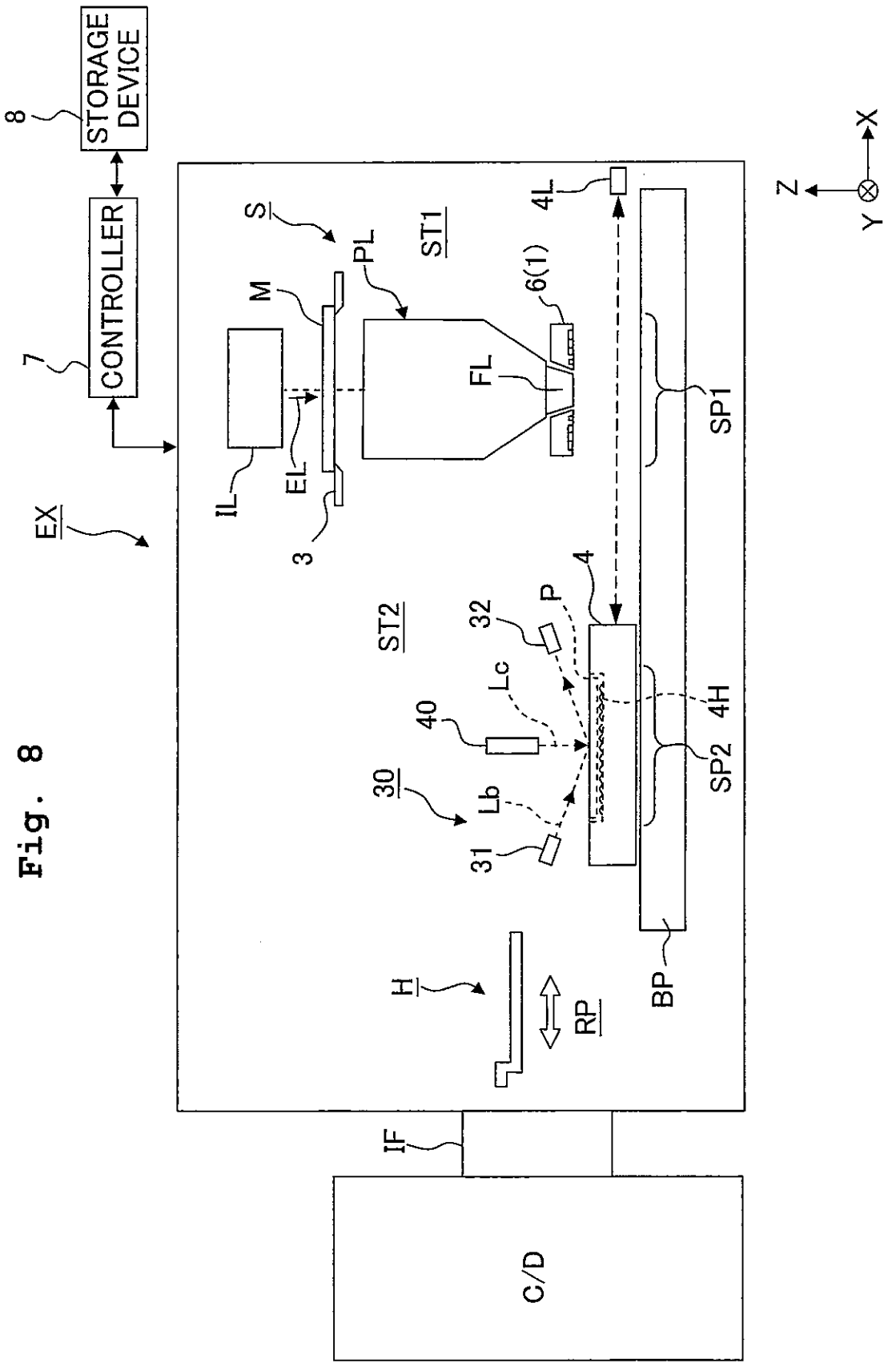
STORAGE DEVICE
8
CONTROLLER
7
EX
S
M
PL
ST1
6(1)
FL
IL
EL
3
4L
SP1
ST2
32
P
4
Lc
40
4H
30
Lb
31
SP2
H
RP
BP
IF
C/D
Z
X
Y

Fig. 9

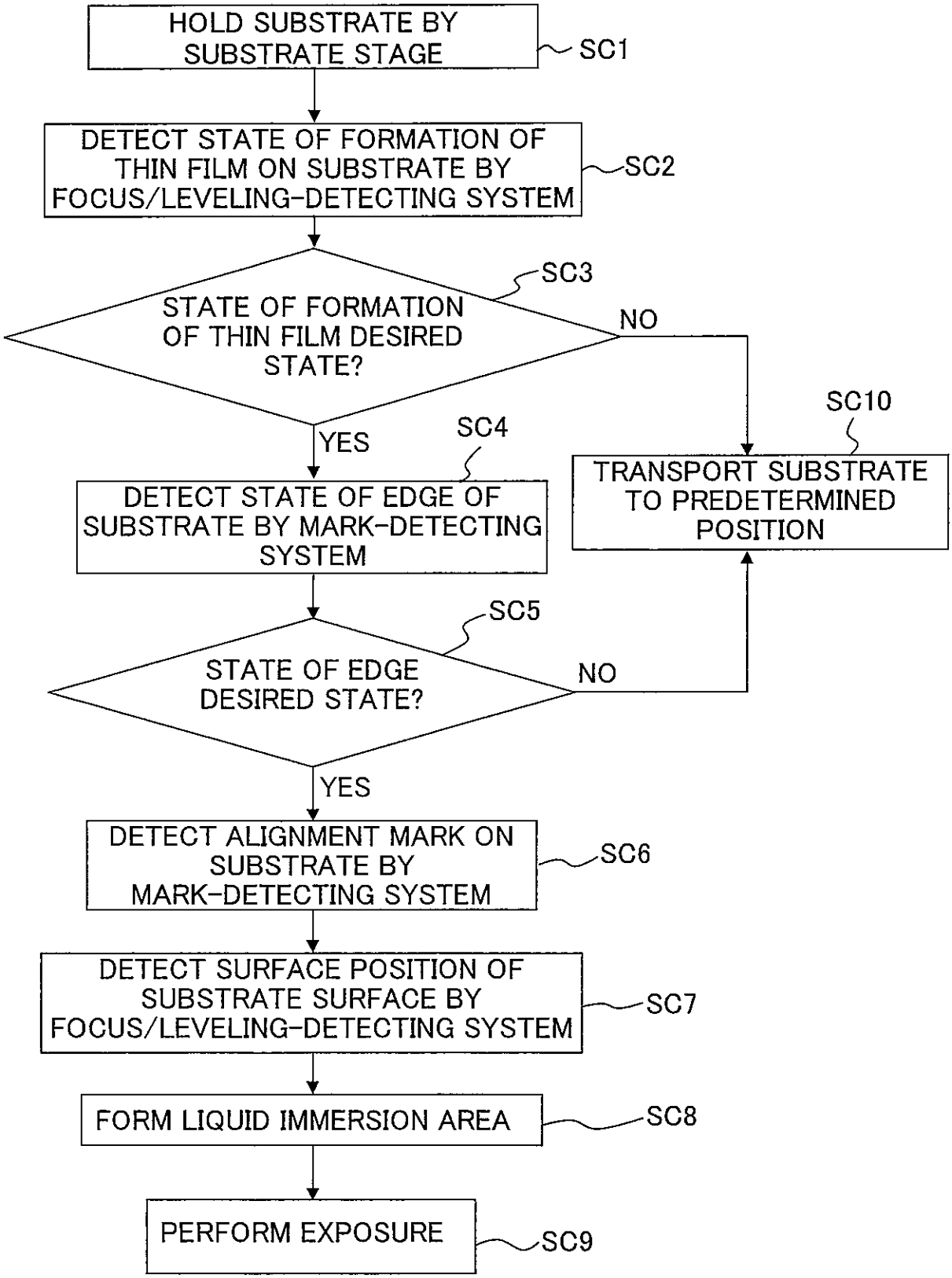
HOLD SUBSTRATE BY SUBSTRATE STAGE
SC1
DETECT STATE OF FORMATION OF THIN FILM ON SUBSTRATE BY FOCUS/LEVELING-DETECTING SYSTEM
SC2
STATE OF FORMATION OF THIN FILM DESIRED STATE?
SC3
NO
YES
SC4
SC10
TRANSPORT SUBSTRATE TO PREDETERMINED POSITION
DETECT STATE OF EDGE OF SUBSTRATE BY MARK-DETECTING SYSTEM
SC5
STATE OF EDGE DESIRED STATE?
NO
YES
DETECT ALIGNMENT MARK ON SUBSTRATE BY MARK-DETECTING SYSTEM
SC6
DETECT SURFACE POSITION OF SUBSTRATE SURFACE BY FOCUS/LEVELING-DETECTING SYSTEM
SC7
FORM LIQUID IMMERSION AREA
SC8
PERFORM EXPOSURE
SC9

Fig. 10

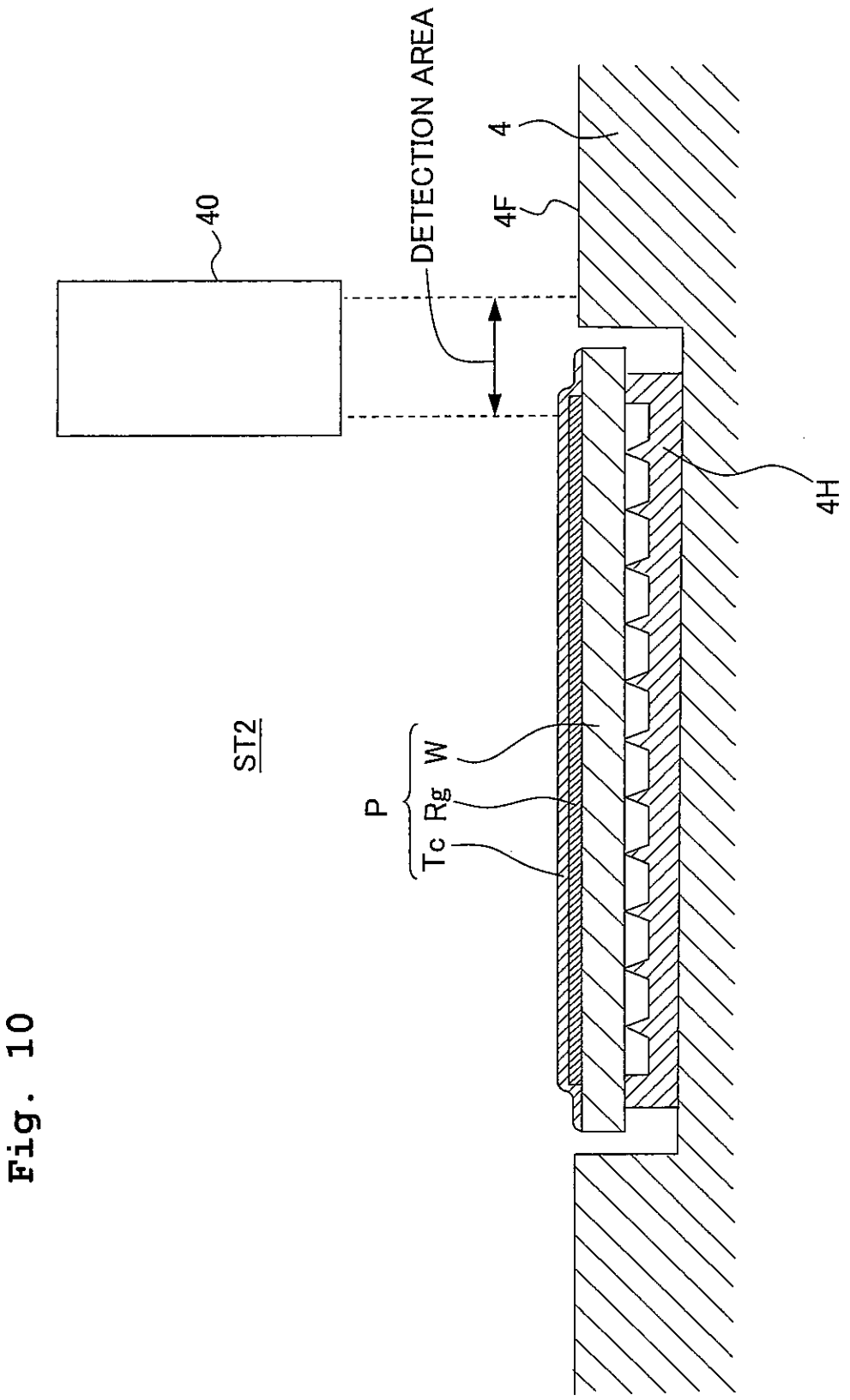

Fig. 11

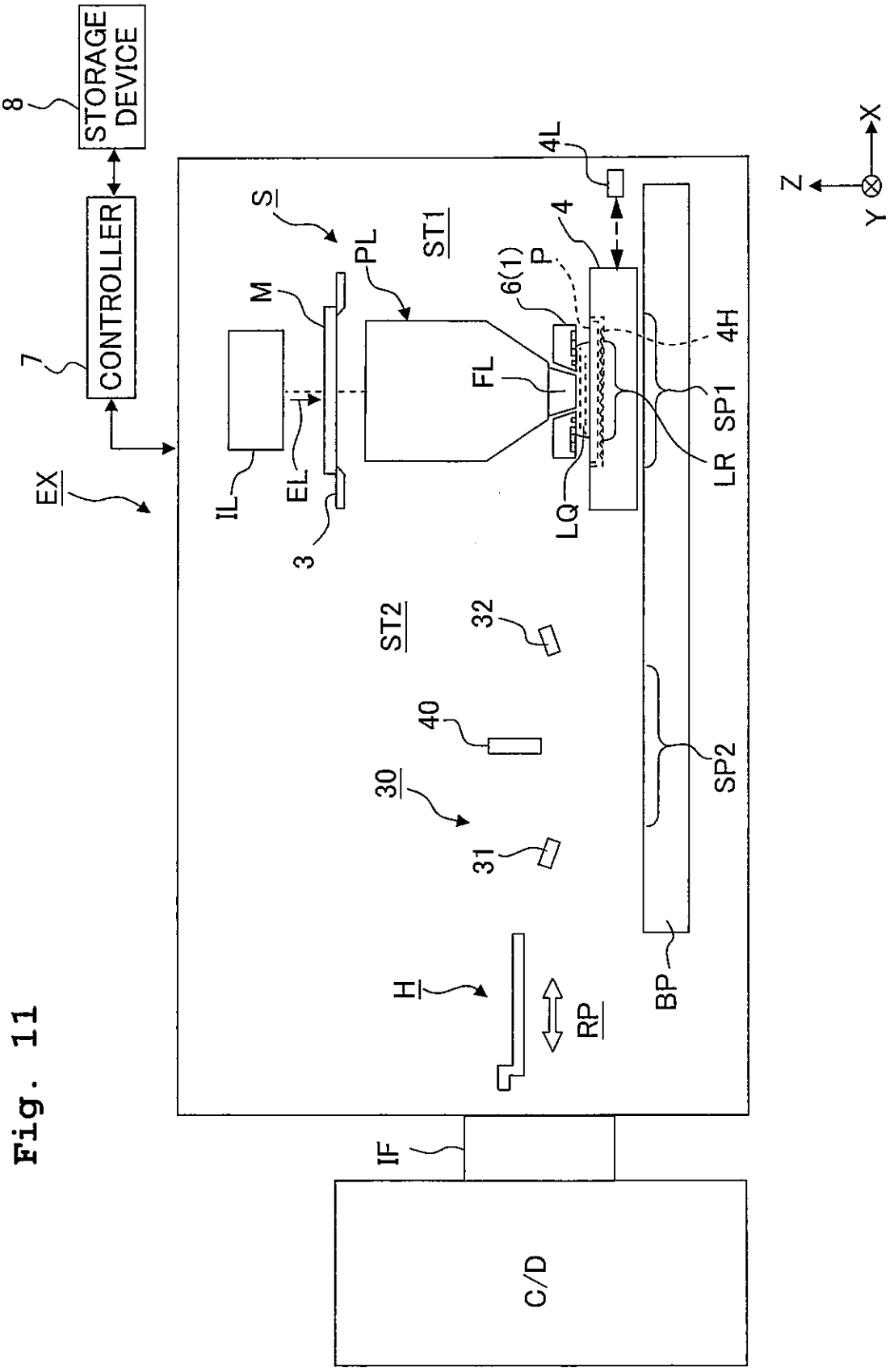
8
STORAGE DEVICE
7
CONTROLLER
EX
S
PL
ST1
M
IL
EL
3
6(1)
P
FL
4
4L
LQ
LR
SP1
4H
ST2
32
40
30
31
SP2
H
RP
BP
IF
C/D
Z
X
Y

Fig. 12

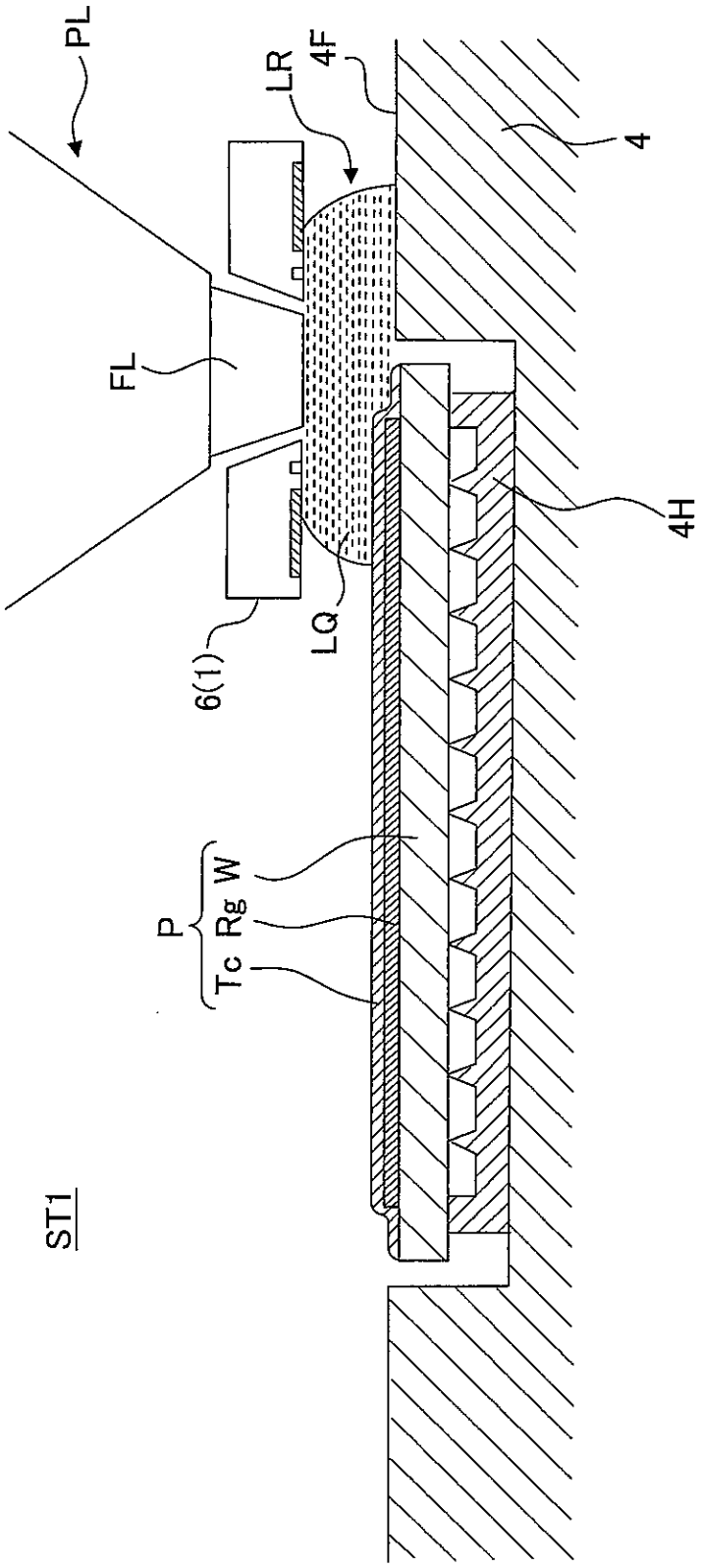

Fig. 13

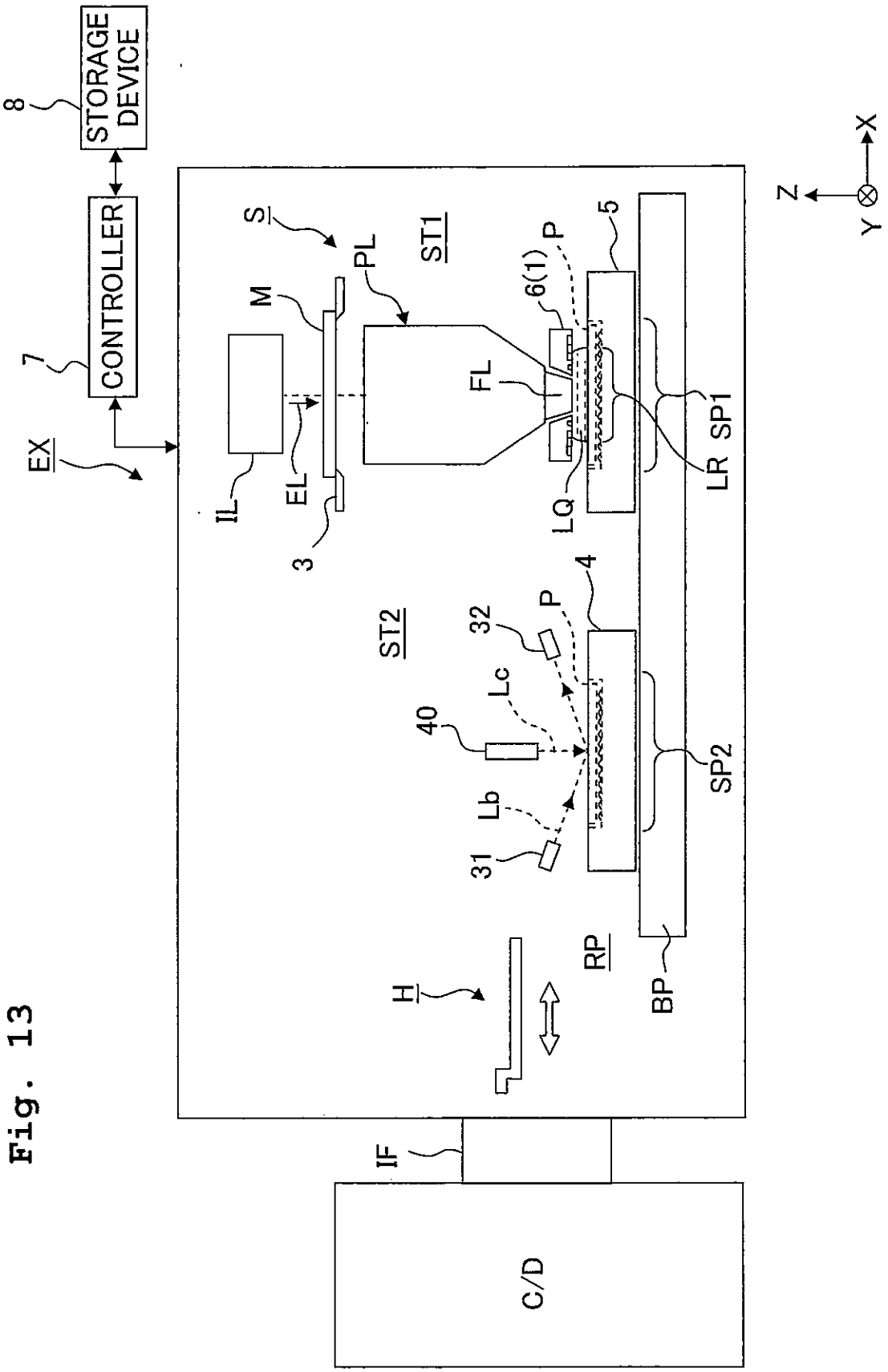
8
STORAGE DEVICE
7
CONTROLLER
EX
S
PL
M
ST1
6(1)
P
5
FL
IL
EL
3
LQ
LR
SP1
ST2
32
P
4
Lc
40
Lb
31
SP2
H
RP
BP
IF
C/D
Z
X
Y

Fig. 14

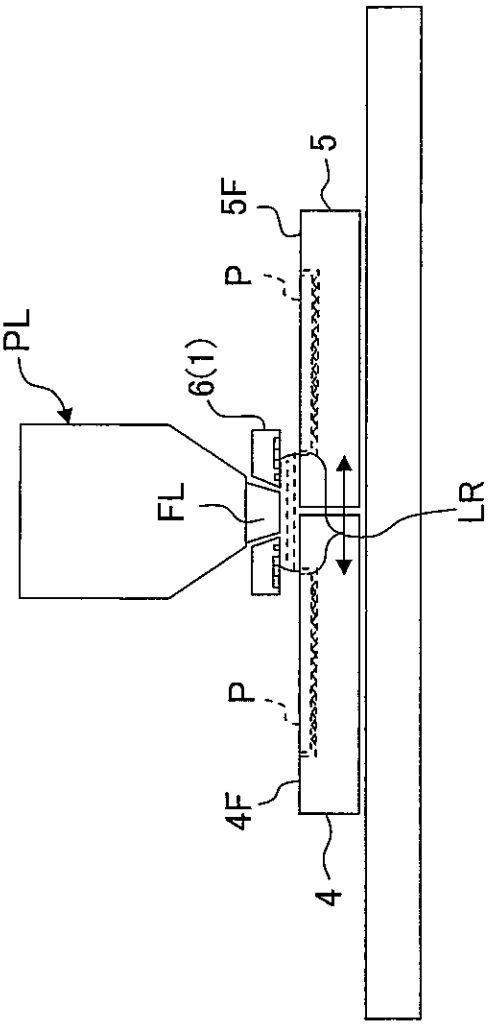

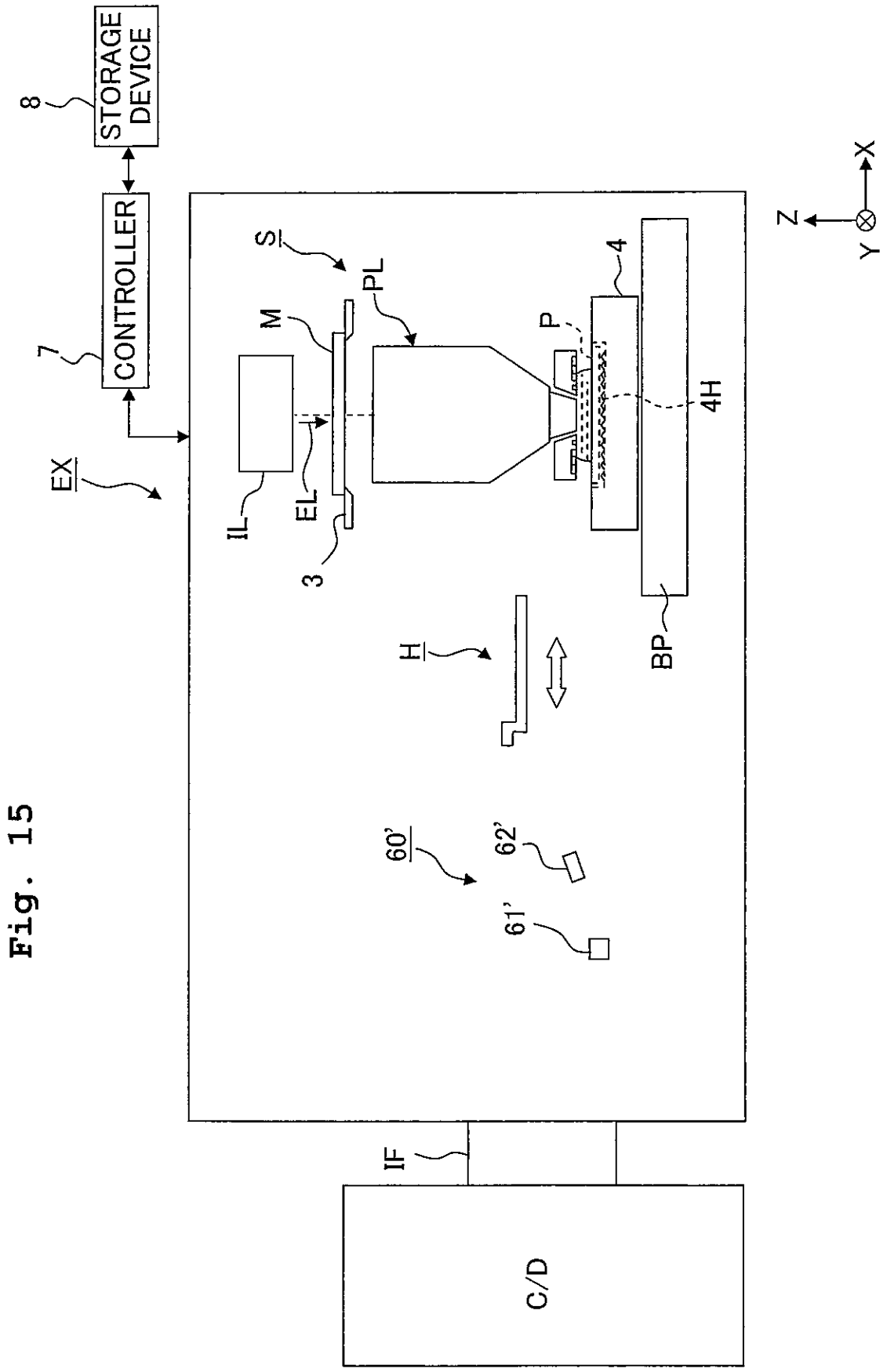
8
STORAGE DEVICE
7
CONTROLLER
EX
S
M
PL
P
4
4H
IL
EL
3
H
BP
60'
62'
61'
IF
C/D
Z
X
Y

Fig. 15

Fig. 16

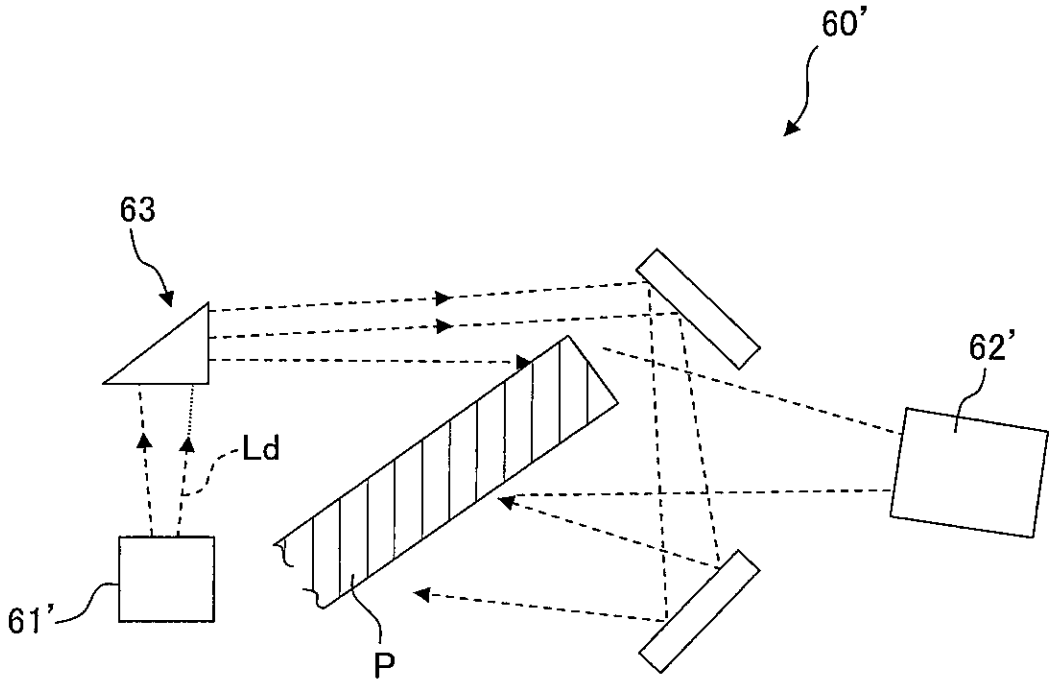

Fig. 17

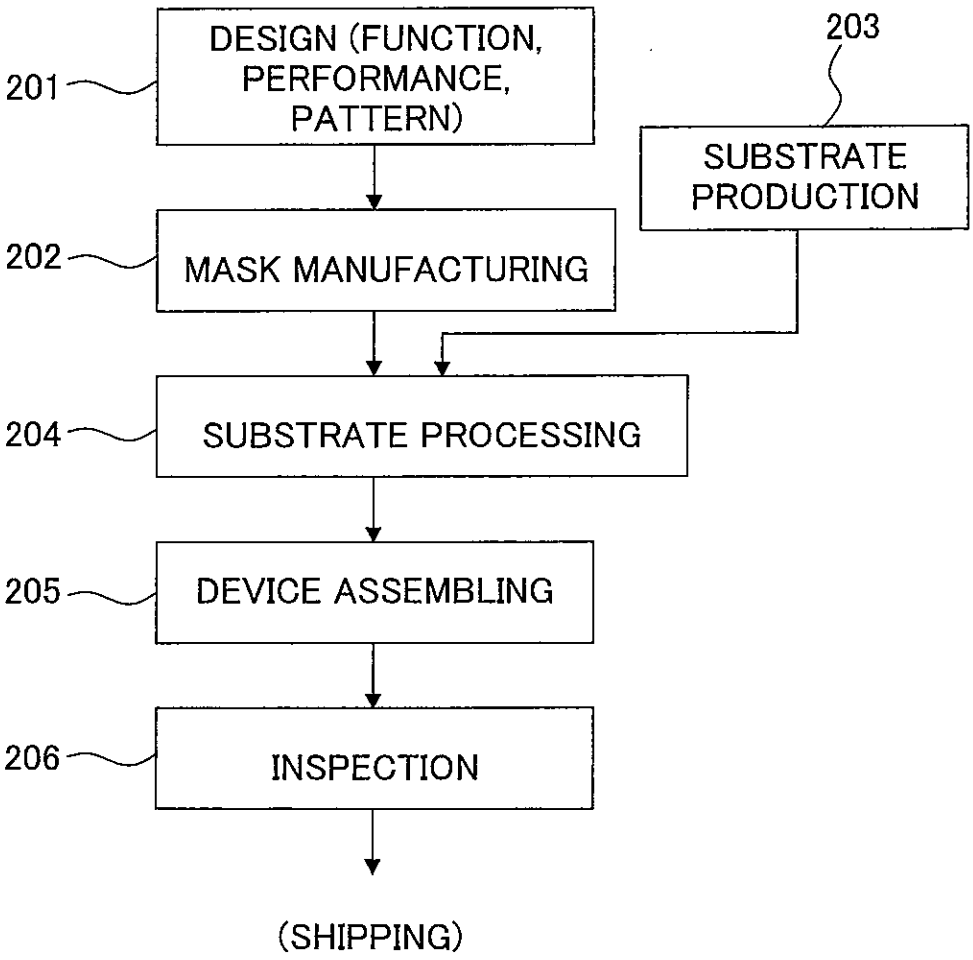
DESIGN (FUNCTION, PERFORMANCE, PATTERN)
201
203
SUBSTRATE PRODUCTION
MASK MANUFACTURING
202
SUBSTRATE PROCESSING
204
DEVICE ASSEMBLING
205
INSPECTION
206
(SHIPPING)