31/12/02
2002078889

(12) INTERNATIONAL APPLICATION PUBLISHED UNDER THE PATENT COOPERATION TREATY (PCT)

(19) World Intellectual Property Organization
International Bureau

(43) International Publication Date
10 January 2002 (10.01.2002)

PCT

(10) International Publication Number
WO 02/02991 A1

(51) International Patent Classification[7]: F23D 14/06, F24C 3/08

(21) International Application Number: PCT/IB01/01053

(22) International Filing Date: 15 June 2001 (15.06.2001)

(25) Filing Language: English

(26) Publication Language: English

(30) Priority Data:
MI2000A001523 6 July 2000 (06.07.2000) IT

(71) Applicant *(for all designated States except US)*: SABAF S.P.A. [IT/IT]; Via Rango, 23, I-25065 Lumezzane (IT).

(72) Inventor; and
(75) Inventor/Applicant *(for US only)*: BETTINZOLI, Angelo [IT/IT]; Via Donizetti, 25, I-25062 Concesio (IT).

(74) Agent: MARIETTI, Giuseppe; Marietti, Gislon e Trupiano S.r.l., Via Larga, 16, I-20122 Milan (IT).

(81) Designated States *(national)*: AE, AG, AL, AM, AT, AU, AZ, BA, BB, BG, BR, BY, BZ, CA, CH, CN, CO, CR, CU, CZ, DE, DK, DM, DZ, EC, EE, ES, FI, GB, GD, GE, GH, GM, HR, HU, ID, IL, IN, IS, JP, KE, KG, KP, KR, KZ, LC, LK, LR, LS, LT, LU, LV, MA, MD, MG, MK, MN, MW, MX, MZ, NO, NZ, PL, PT, RO, RU, SD, SE, SG, SI, SK, SL, TJ, TM, TR, TT, TZ, UA, UG, US, UZ, VN, YU, ZA, ZW.

(84) Designated States *(regional)*: ARIPO patent (GH, GM, KE, LS, MW, MZ, SD, SL, SZ, TZ, UG, ZW), Eurasian patent (AM, AZ, BY, KG, KZ, MD, RU, TJ, TM), European patent (AT, BE, CH, CY, DE, DK, ES, FI, FR, GB, GR, IE, IT, LU, MC, NL, PT, SE, TR), OAPI patent (BF, BJ, CF, CG, CI, CM, GA, GN, GW, ML, MR, NE, SN, TD, TG).

[Continued on next page]

(54) Title: BURNER WITH INTERNAL SEPARATOR

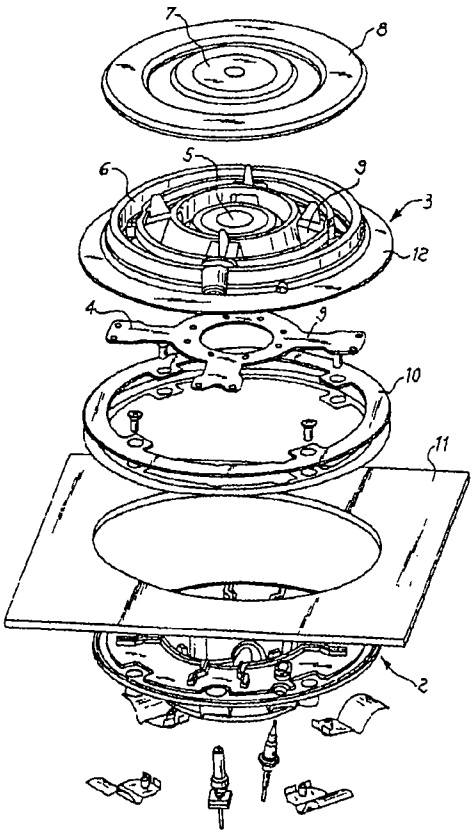

(57) Abstract: The invention relates to a burner (1) for cookers, suitable for burning gas, comprising at least two gas crowns, of which one central one and at least one circumferential one, a mixing chamber (13) with Venturi effect, ducts for entry of the primary air and radial ducts (9) for feeding the gas/primary air mixture to the said at least one circumferential crown, comprising a body (3), a head (2) and a separation element (4) that breaks up the internal space into ducts for entry of the primary air and ducts for distribution of the gas/primary air mixture.

WO 02/02991 A1

162162

ACTION