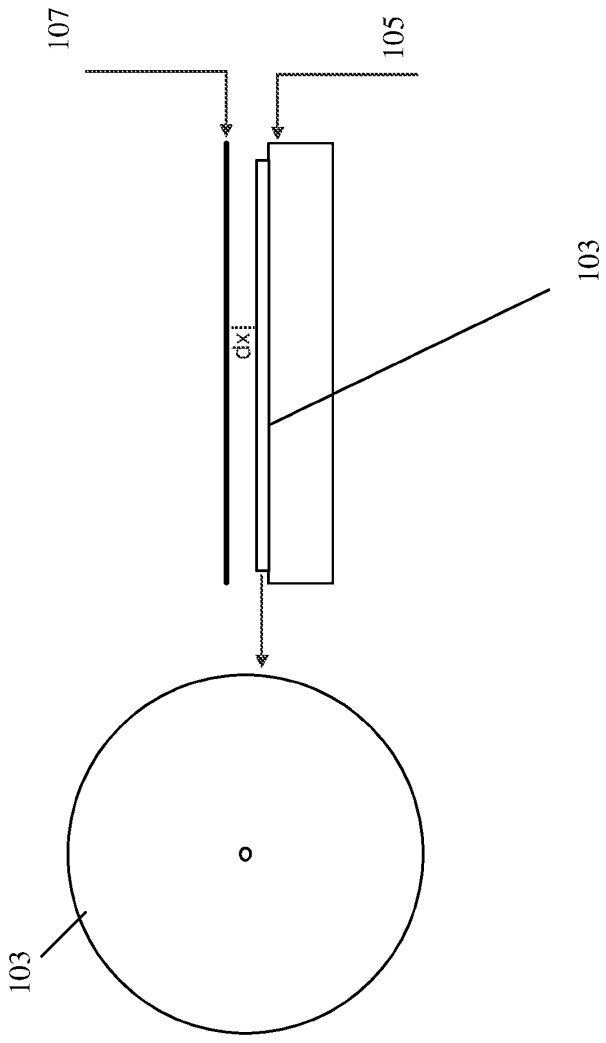

Figure 1

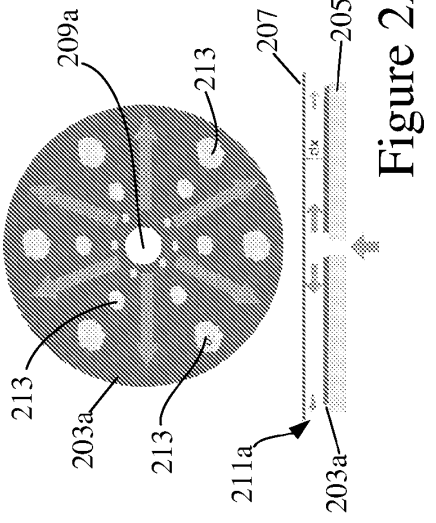

Figure 2A

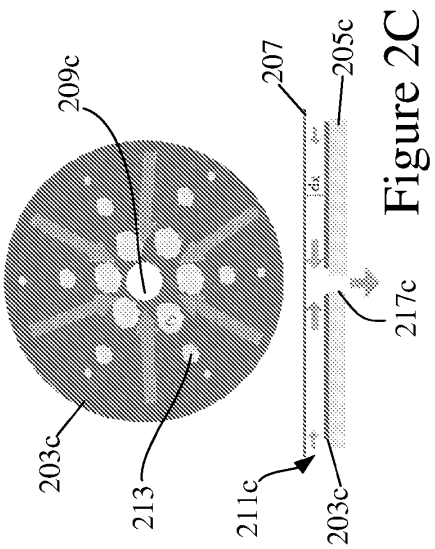

Figure 2C

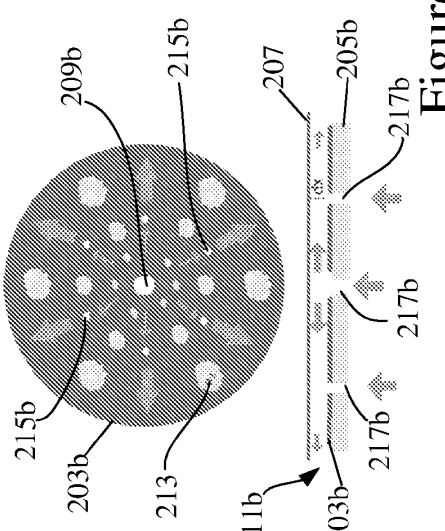

Figure 2B

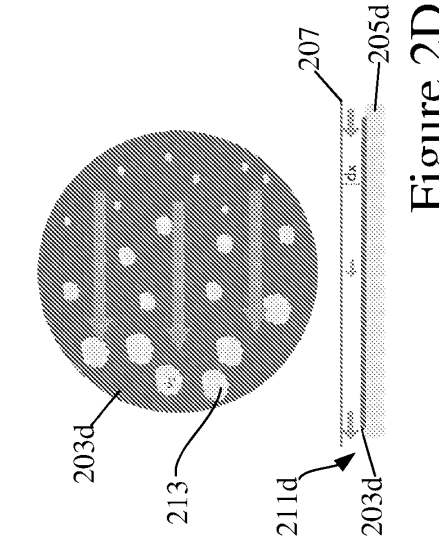

Figure 2D

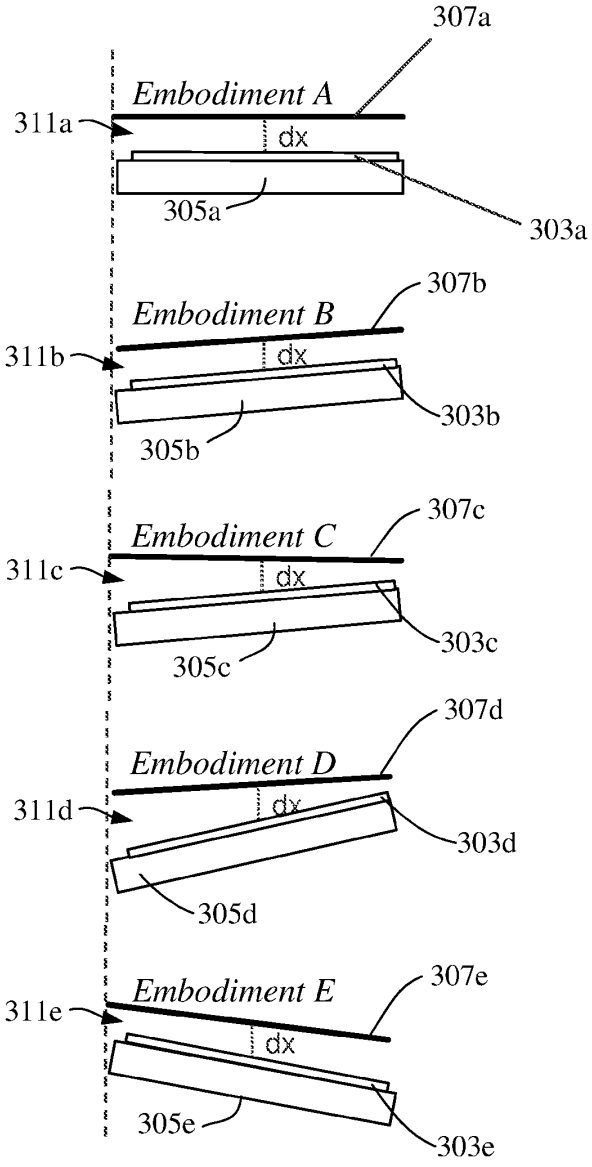
307a
Embodiment A
311a
dx
305a
303a
307b
Embodiment B
311b
dx
303b
305b
307c
Embodiment C
311c
dx
303c
305c
307d
Embodiment D
311d
dx
303d
305d
307e
Embodiment E
311e
dx
305e
303e

Figure 3

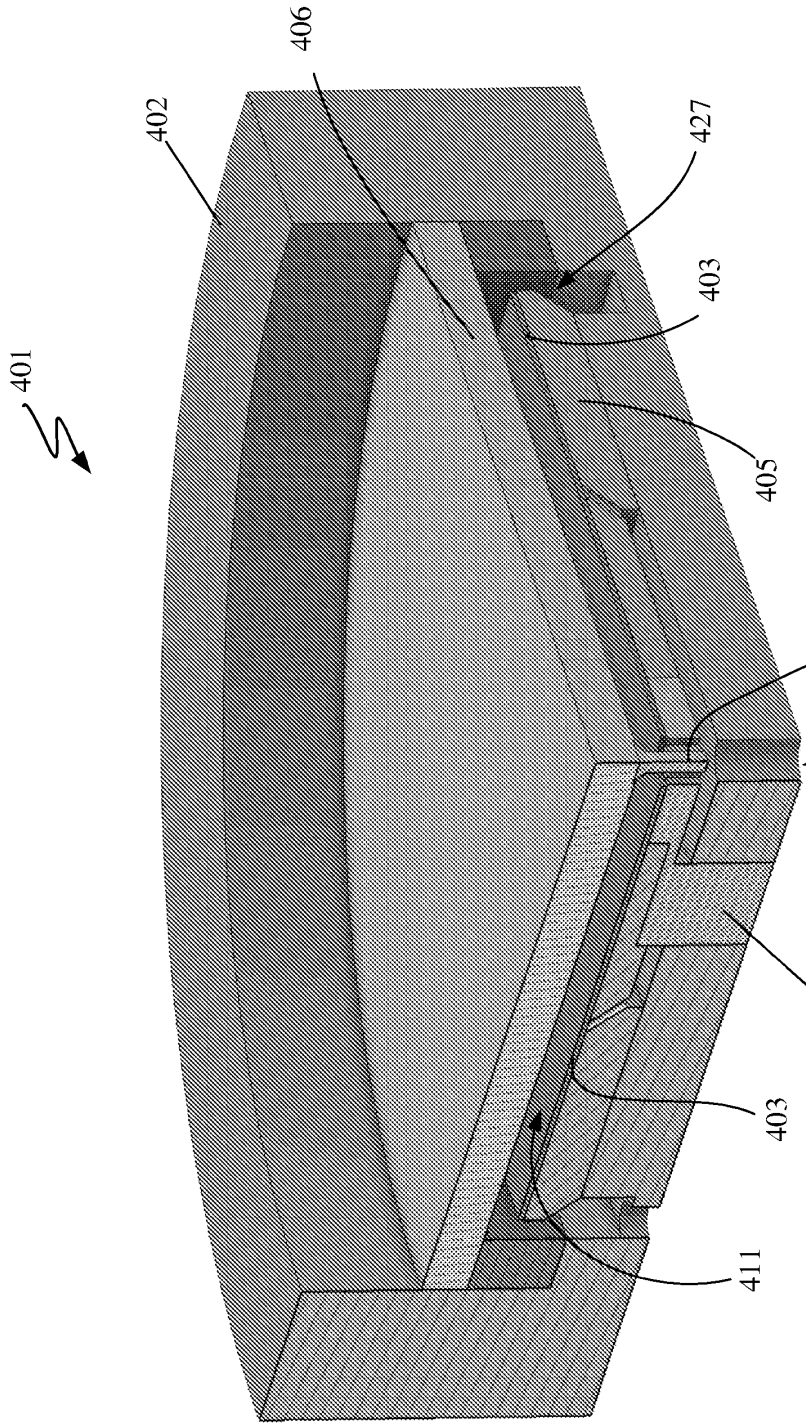

Figure 4

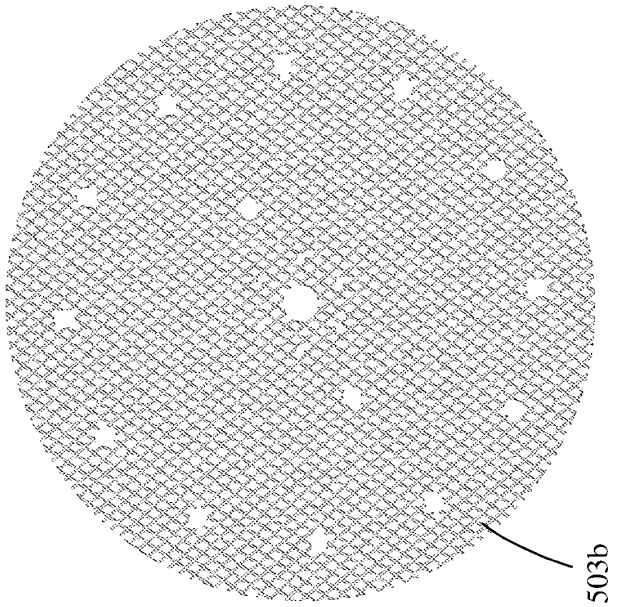

Figure 5B

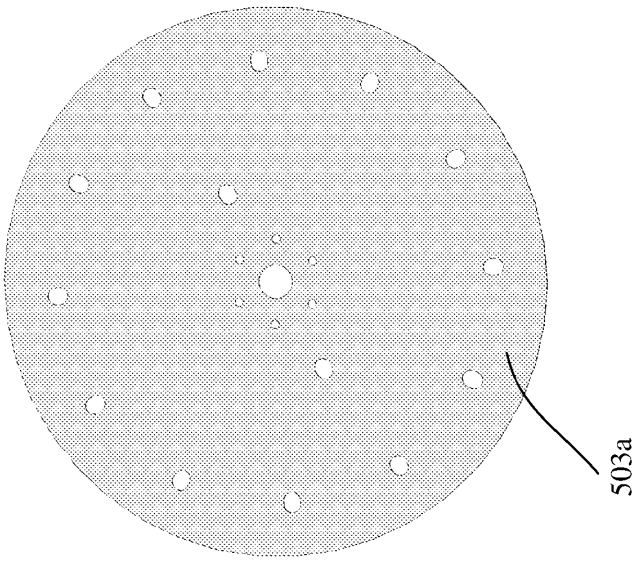

Figure 5A

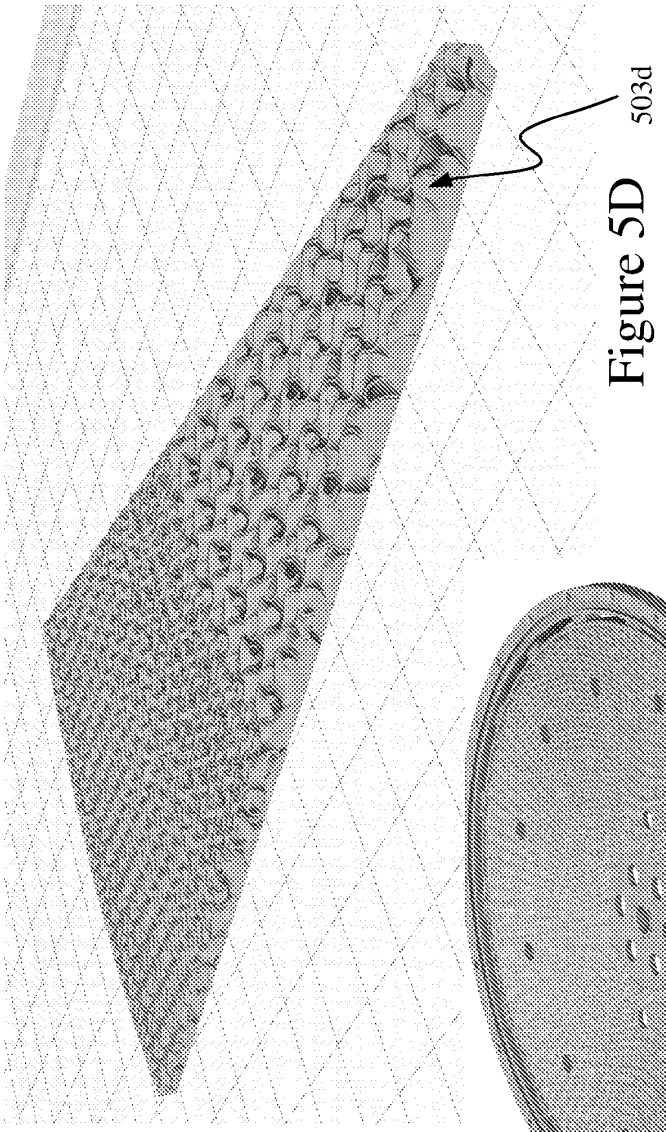

Figure 5D

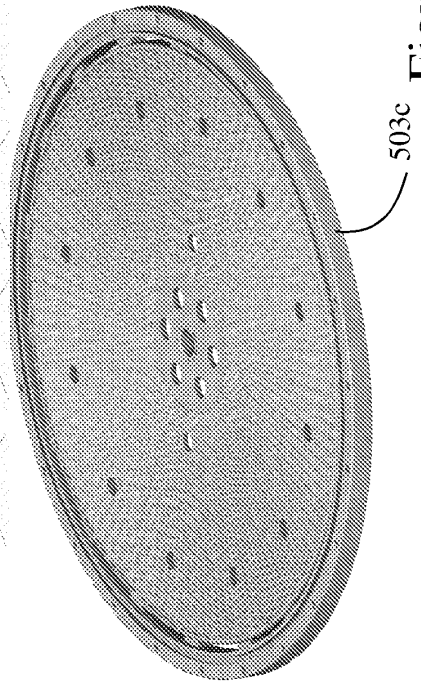

Figure 5C

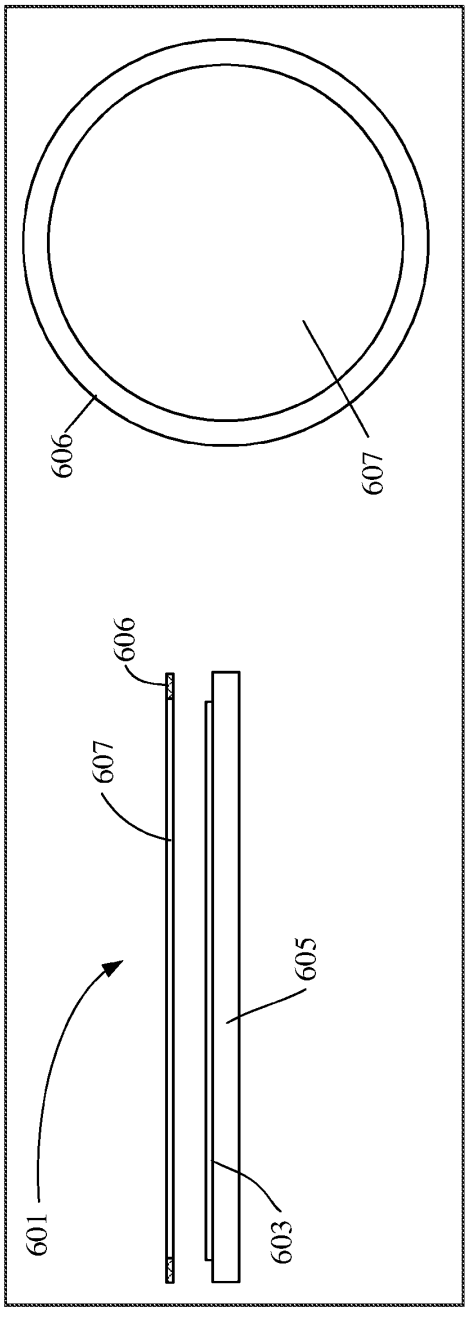

Figure 6A

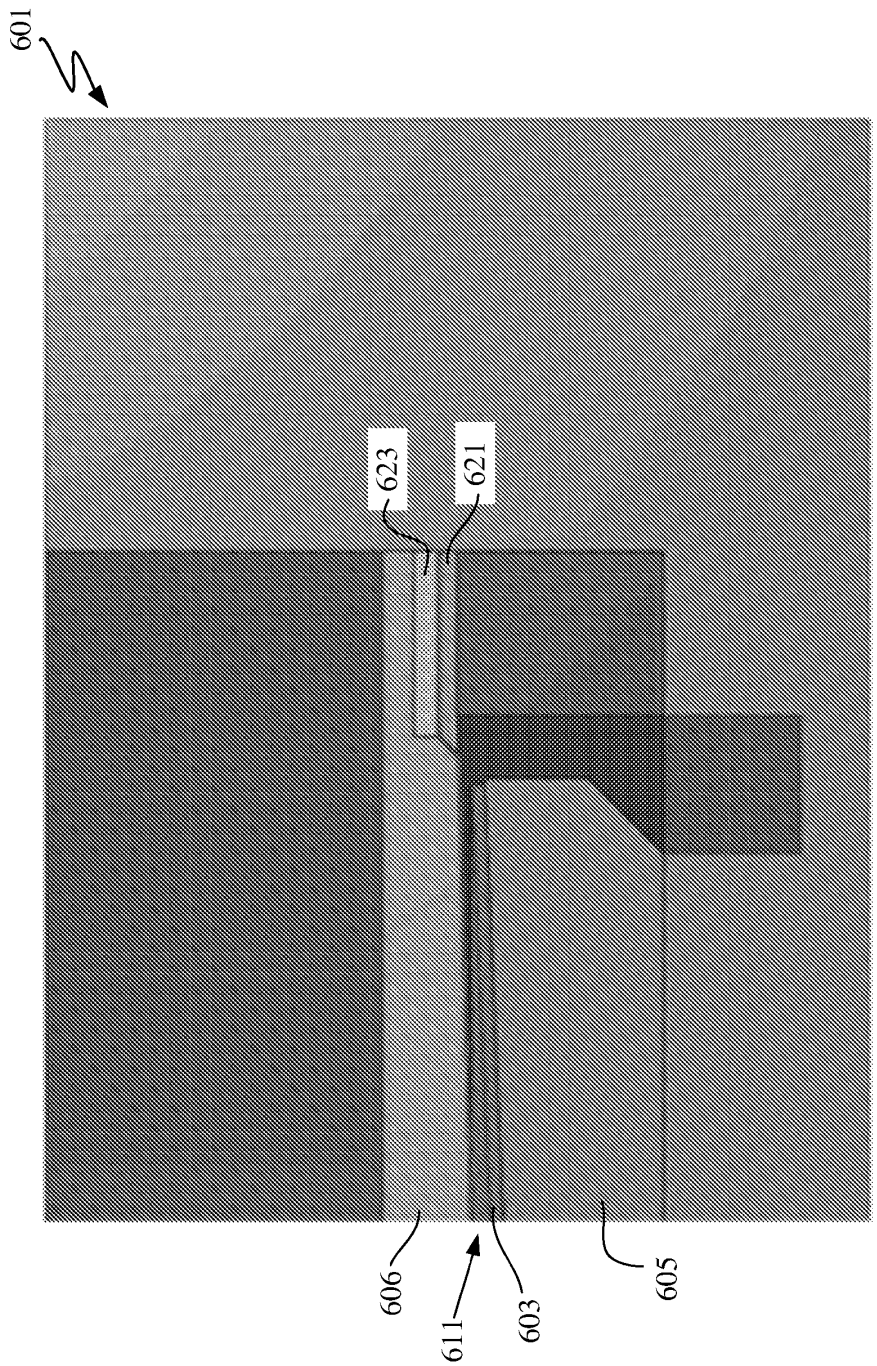

Figure 6B

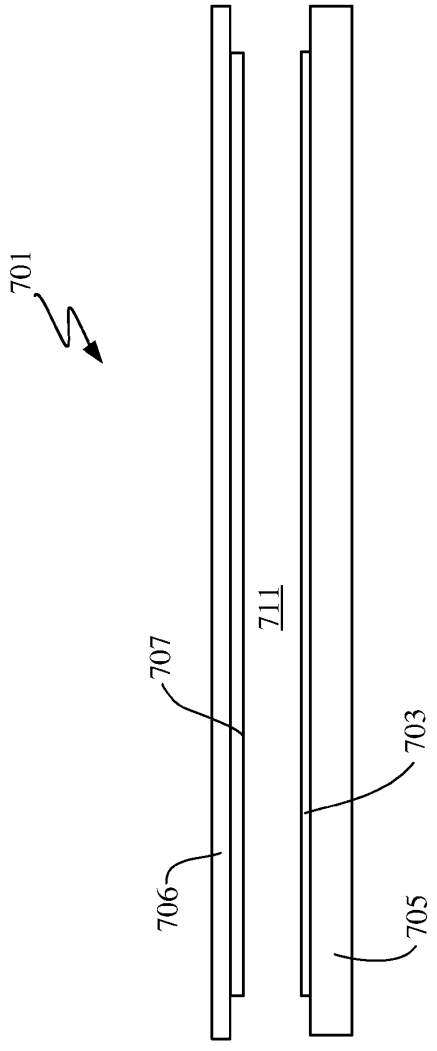

Figure 7A

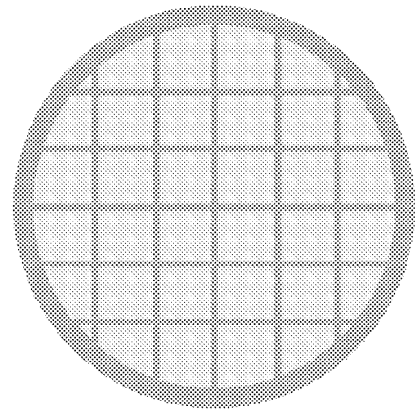

Figure 7D

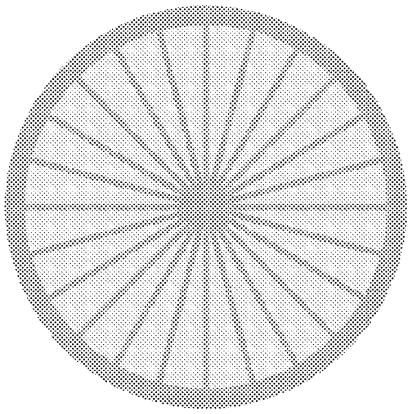

Figure 7C

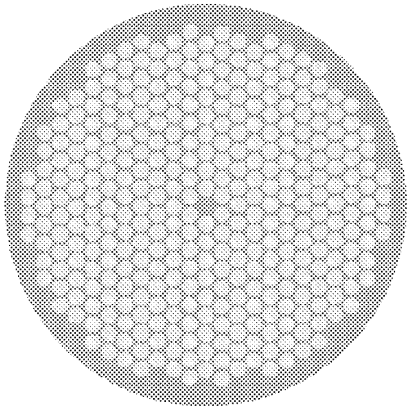

Figure 7B

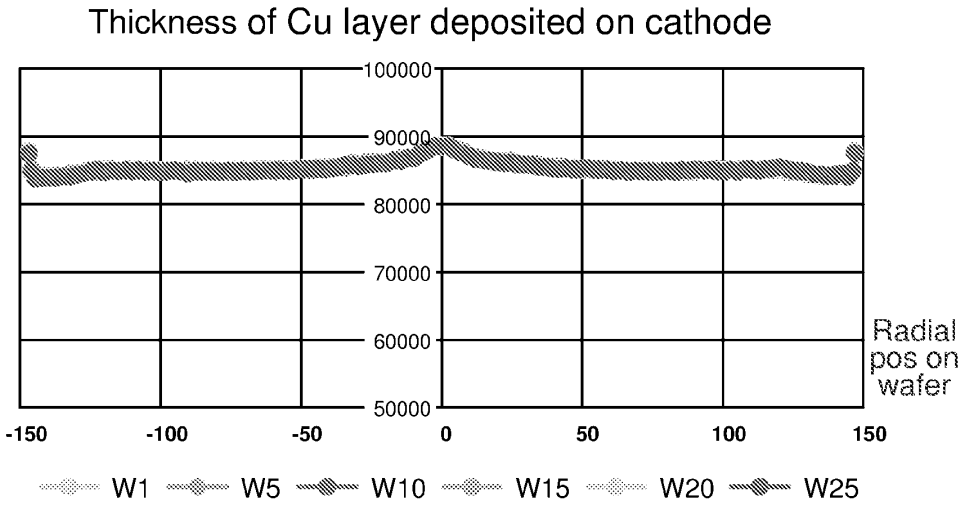

Figure 8A

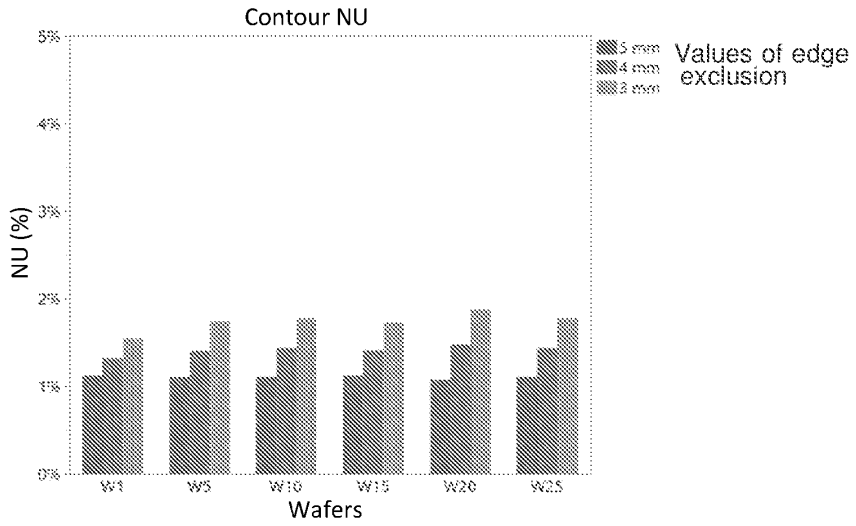

Figure 8B