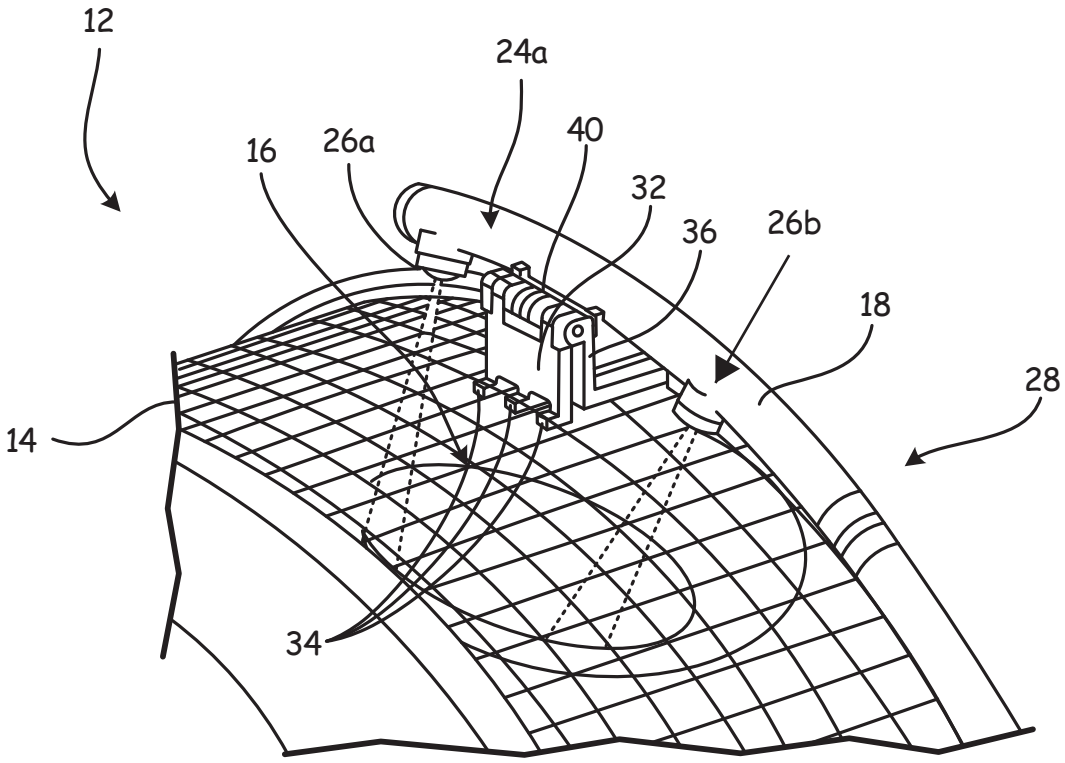

Fig. 2D