(12) INTERNATIONAL APPLICATION PUBLISHED UNDER THE PATENT COOPERATION TREATY (PCT)

(19) World Intellectual Property Organization
International Bureau

(43) International Publication Date
30 September 2004 (30.09.2004)

PCT

(10) International Publication Number
WO 2004/083800 A1

(51) International Patent Classification[7]: G01M 3/36

(21) International Application Number:
PCT/US2004/008183

(22) International Filing Date: 15 March 2004 (15.03.2004)

(25) Filing Language: English

(26) Publication Language: English

(30) Priority Data:

60/455,342	17 March 2003 (17.03.2003)	US
10/800,903	15 March 2004 (15.03.2004)	US

(71) Applicant *(for all designated States except US)*: **JOHNSON & JOHNSON VISION CARE, INC.** [US/US]; 7500 Centurion Parkway, Suite 100, Jacksonville, FL 32256 (US).

(72) Inventors; and

(75) Inventors/Applicants *(for US only)*: **DUNCAN, David, F.** [US/US]; 905 Blackberry Lane_____-, Jacksonville, FL 32259 (US). **MERCER, Danny, S.** [US/US]; 1160 Miramar Avenue, Jacksonville, FL 32207 (US).

(74) Agents: **JOHNSON, Philip, S.** et al.; Johnson & Johnson, One Johnson & Johnson Plaza, New Brunswick, NJ 08933, United States of America (US).

(81) Designated States *(unless otherwise indicated, for every kind of national protection available)*: AE, AG, AL, AM, AT, AU, AZ, BA, BB, BG, BR, BW, BY, BZ, CA, CH, CN, CO, CR, CU, CZ, DE, DK, DM, DZ, EC, EE, EG, ES, FI, GB, GD, GE, GH, GM, HR, HU, ID, IL, IN, IS, JP, KE, KG, KP, KR, KZ, LC, LK, LR, LS, LT, LU, LV, MA, MD, MG, MK, MN, MW, MX, MZ, NA, NI, NO, NZ, OM, PG, PH, PL, PT, RO, RU, SC, SD, SE, SG, SK, SL, SY, TJ, TM, TN, TR, TT, TZ, UA, UG, US, UZ, VC, VN, YU, ZA, ZM, ZW.

(84) Designated States *(unless otherwise indicated, for every kind of regional protection available)*: ARIPO (BW, GH,

[Continued on next page]

(54) Title: IN-LINE LEAK DETECTOR

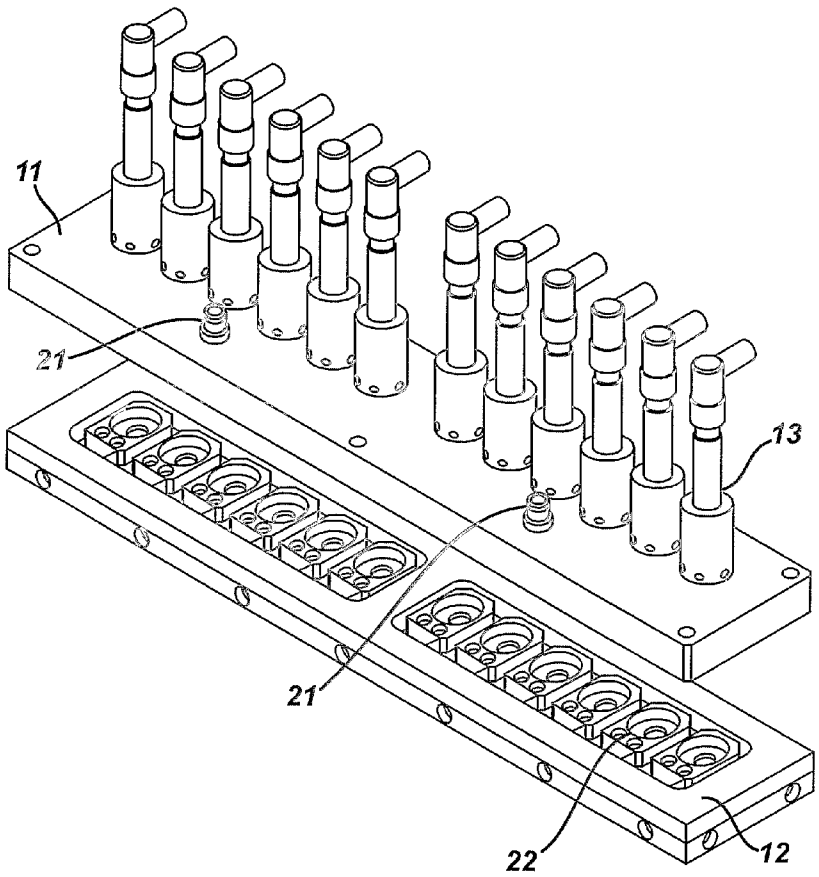

(57) Abstract: The invention provides an in-line leak tester apparatus for detecting leaks in packages having a flexible cover such as contact lens packages. The flexible covers move in contact with an electromechanical switch when the atmospheric pressure surrounding the package is lowered.

WO 2004/083800 A1

GM, KE, LS, MW, MZ, SD, SL, SZ, TZ, UG, ZM, ZW), Eurasian (AM, AZ, BY, KG, KZ, MD, RU, TJ, TM), European (AT, BE, BG, CH, CY, CZ, DE, DK, EE, ES, FI, FR, GB, GR, HU, IE, IT, LU, MC, NL, PL, PT, RO, SE, SI, SK, TR), OAPI (BF, BJ, CF, CG, CI, CM, GA, GN, GQ, GW, ML, MR, NE, SN, TD, TG).

Published:

— *with international search report*

— *before the expiration of the time limit for amending the claims and to be republished in the event of receipt of amendments*

For two-letter codes and other abbreviations, refer to the "Guidance Notes on Codes and Abbreviations" appearing at the beginning of each regular issue of the PCT Gazette.