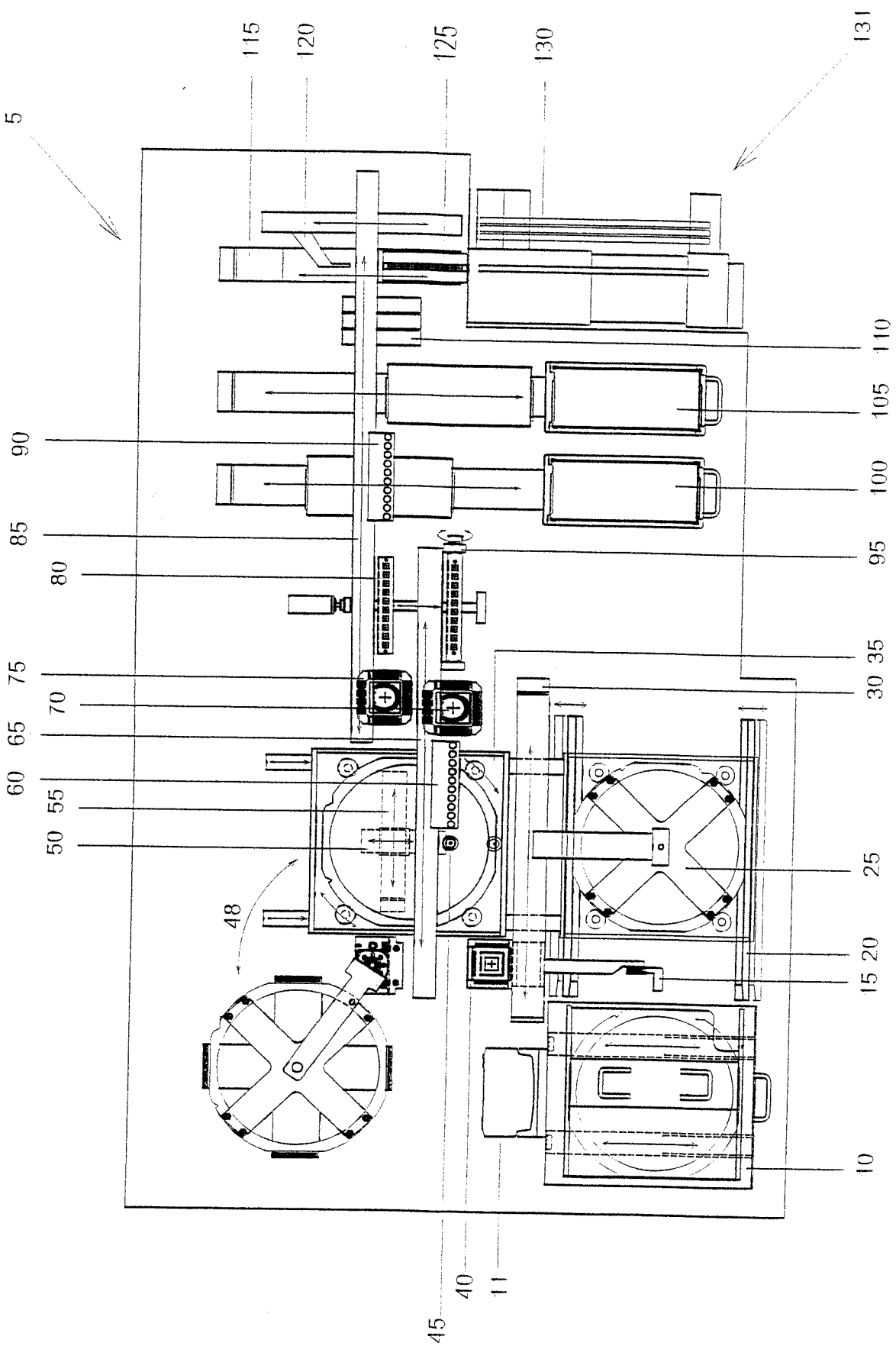
5
115
120
125
130
131
110
105
100
95
90
85
80
75
70
65
60
55
50
48
35
30
25
20
15
10
45
40
11

FIGURE 1

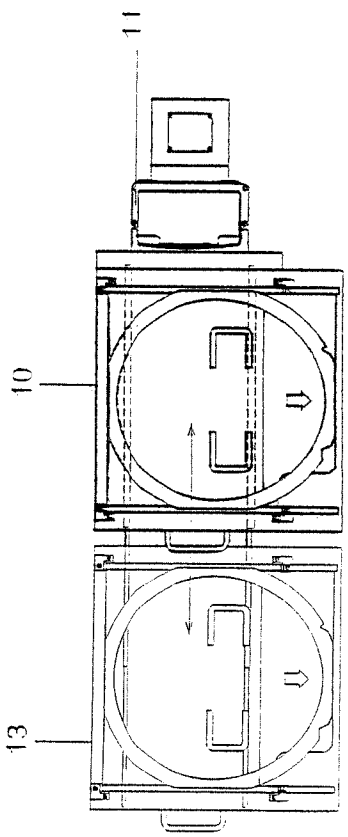

FIG 2A

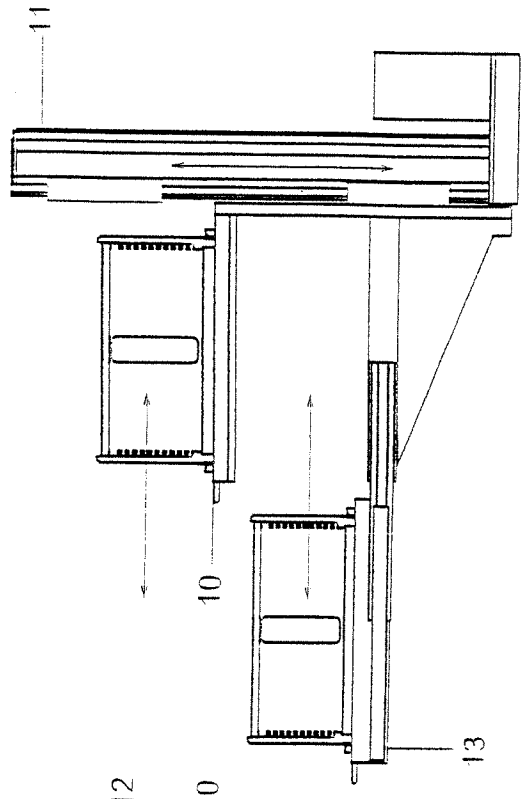

FIG 2C

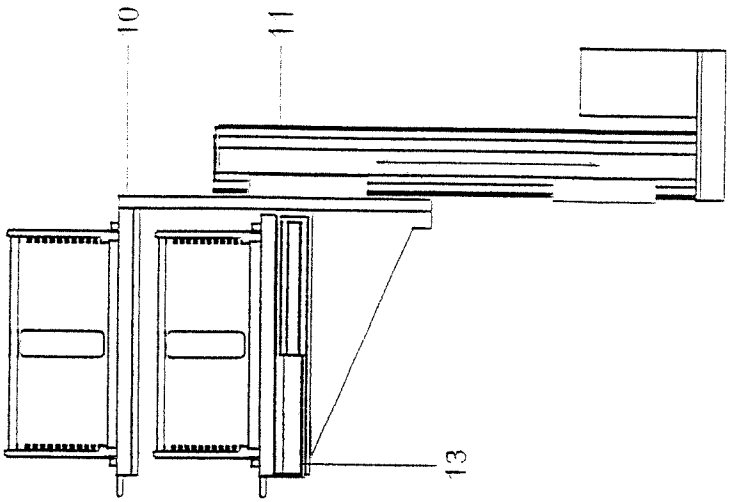

FIG 2D

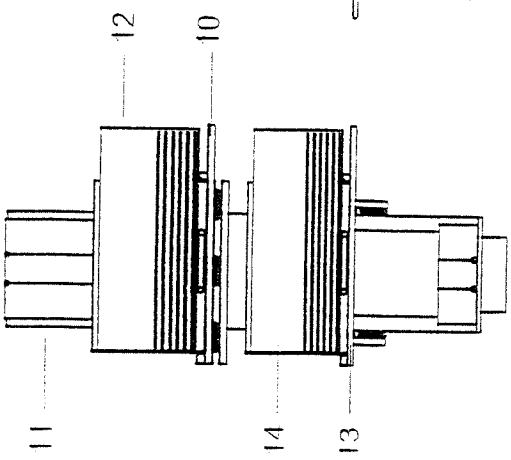

FIG 2B

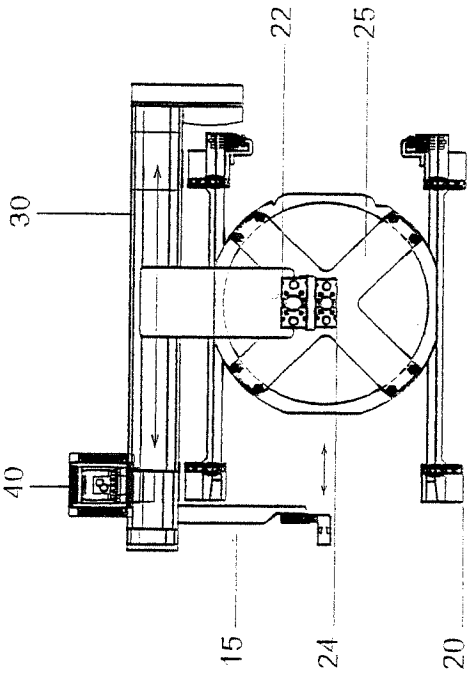

FIG 3A

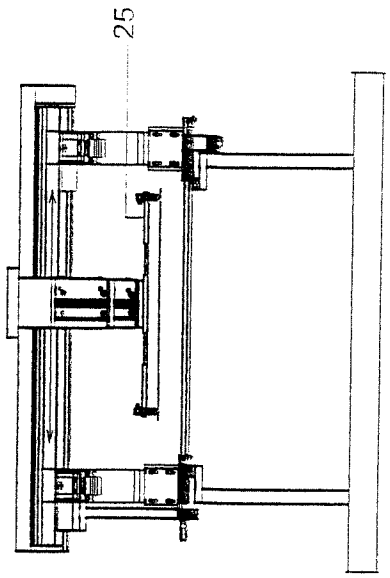

FIG 3C

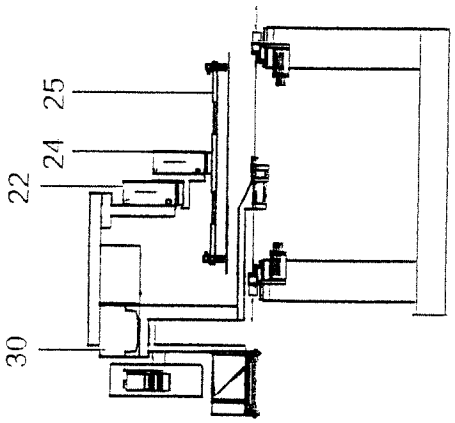

FIG 3B

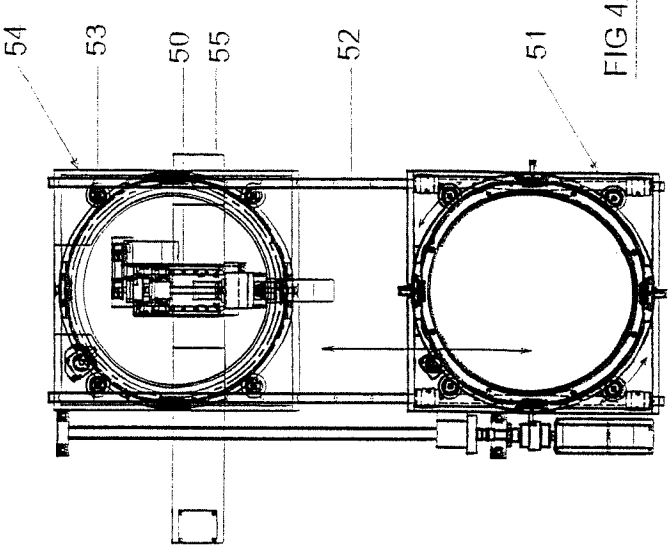

FIG 4A

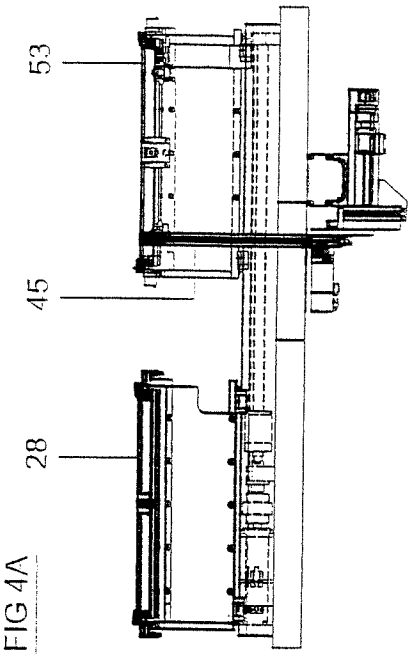

FIG 4C

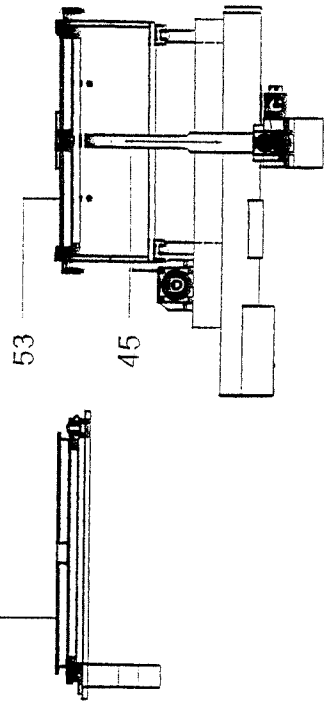

FIG 4B

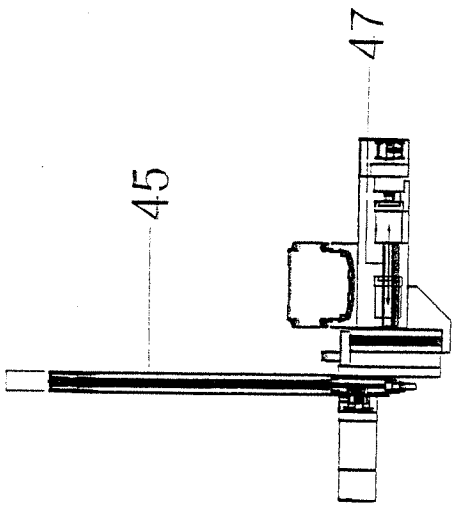

FIG 5C

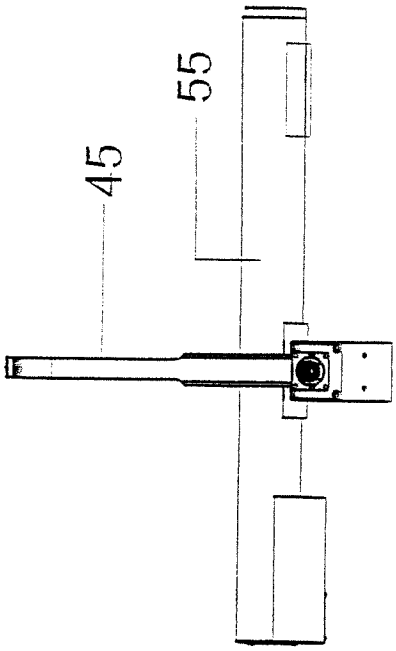

FIG 5B

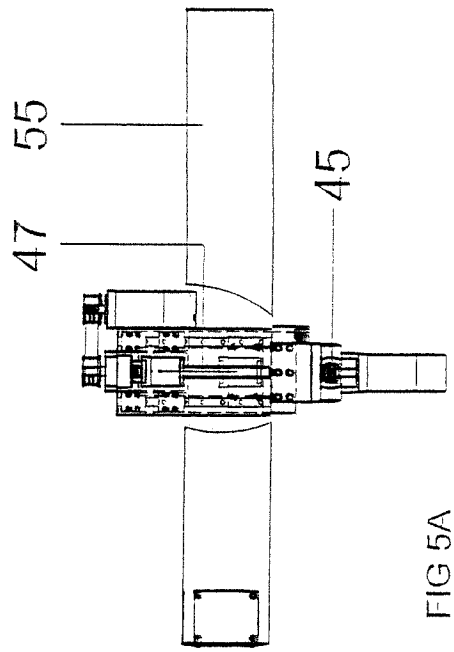

FIG 5A

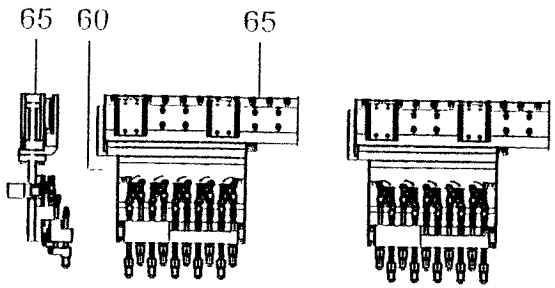

FIG 6A

FIG 6B

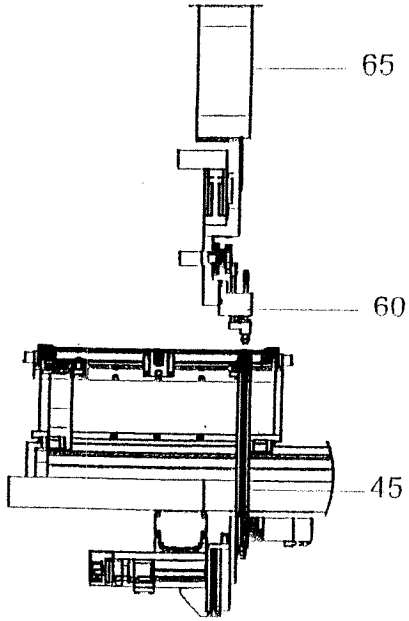

FIG 6D

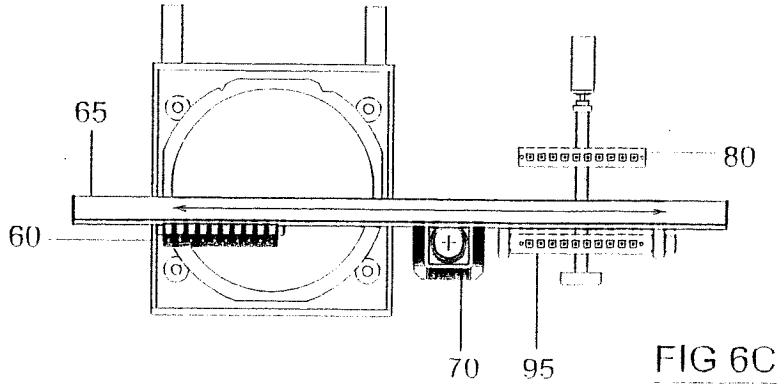

FIG 6C

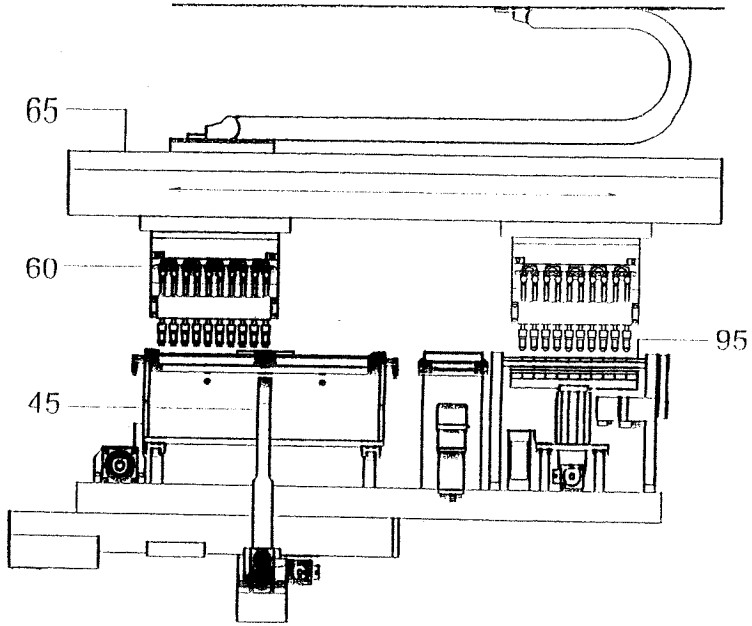

FIG 6E

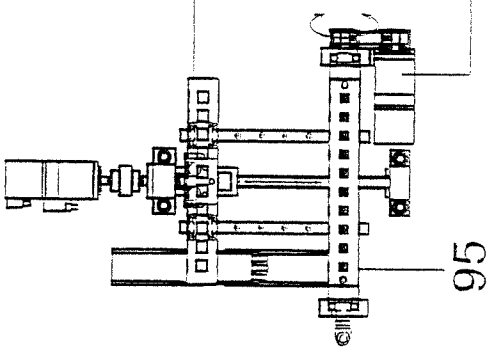

FIG 7A

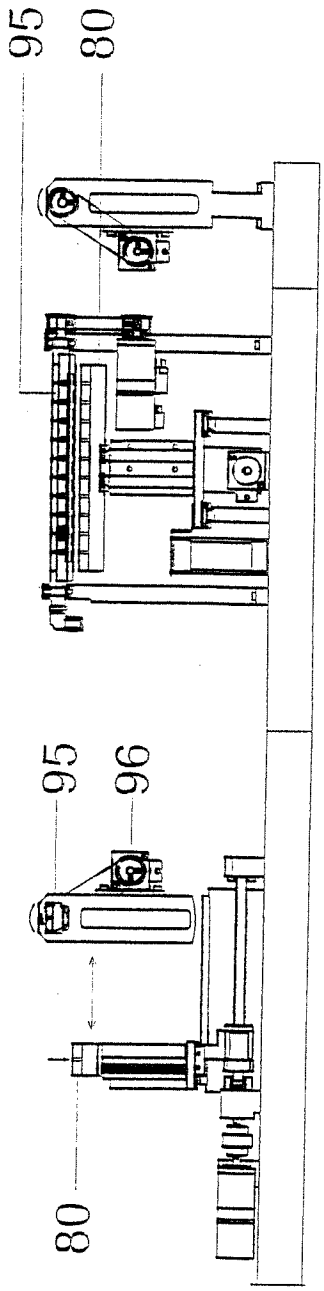

FIG 7C

FIG 7B

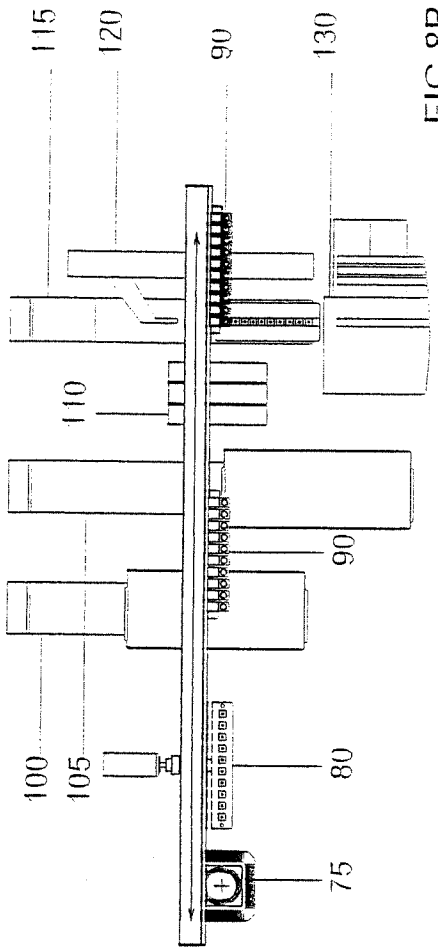

FIG 8B

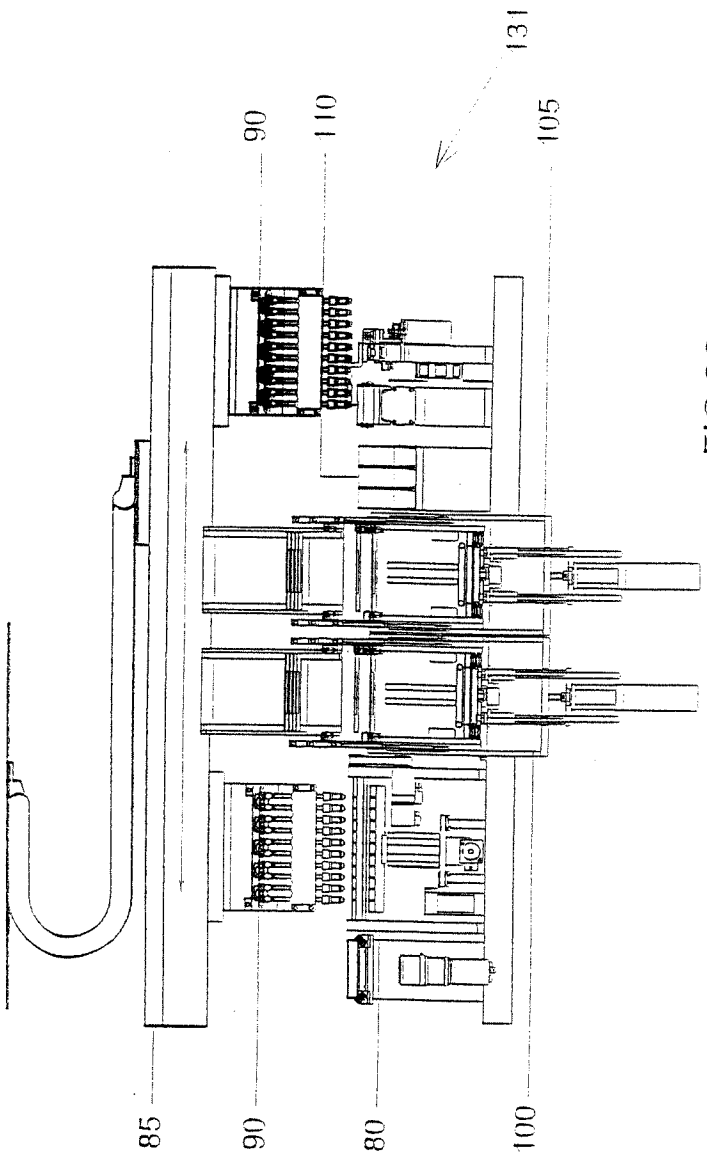

FIG 8C

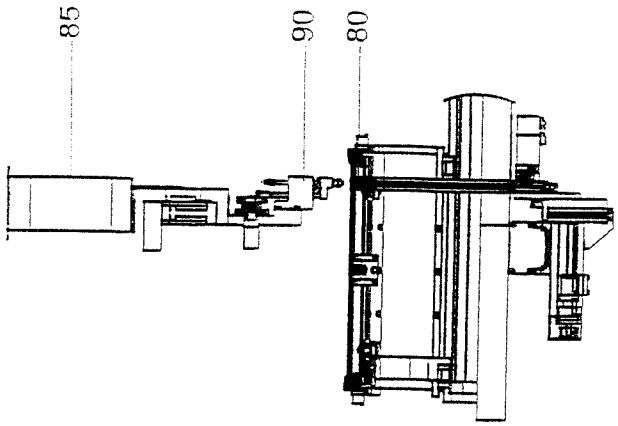

FIG 8A

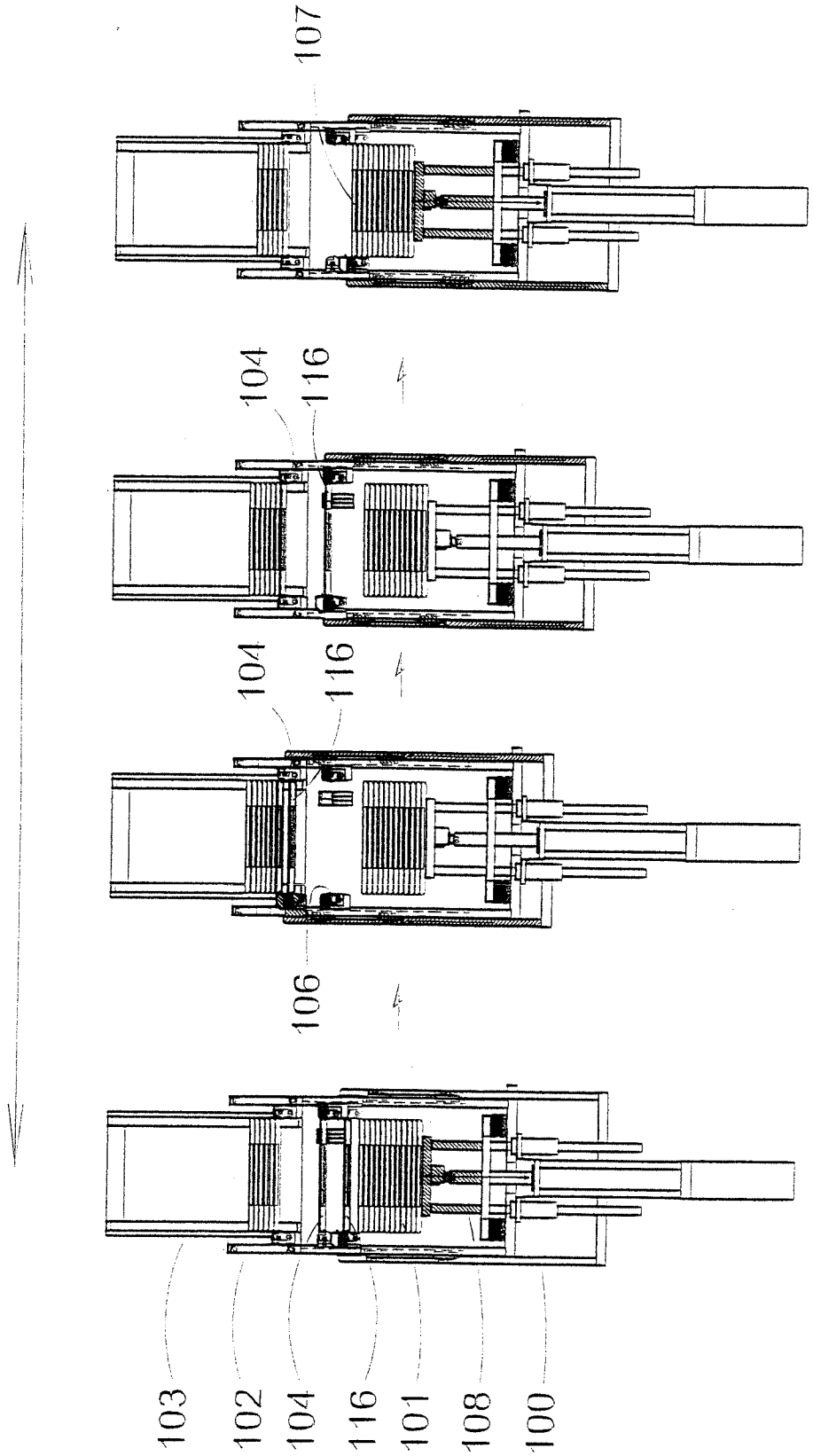

FIG 9D

FIG 9C

FIG 9B

FIG 9A

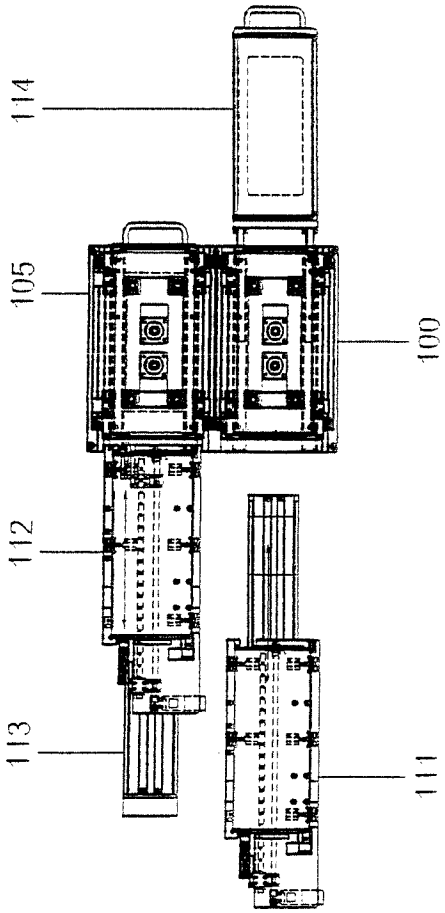

FIG 10A

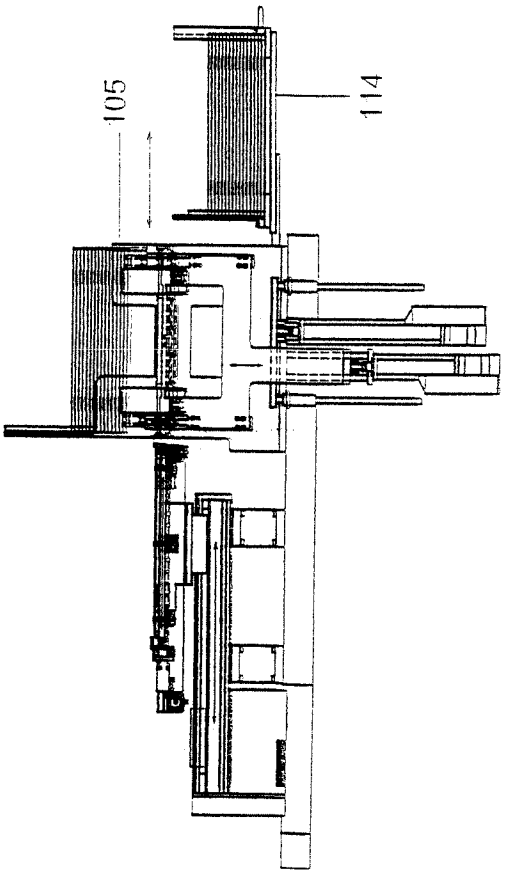

FIG 10B

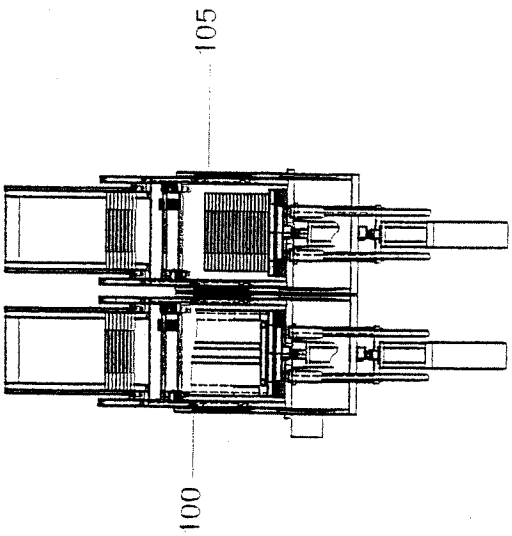

FIG 10C

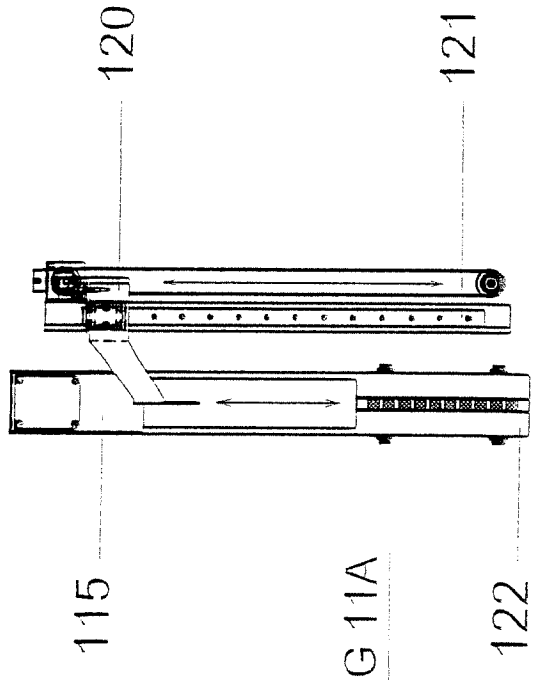

FIG 11A

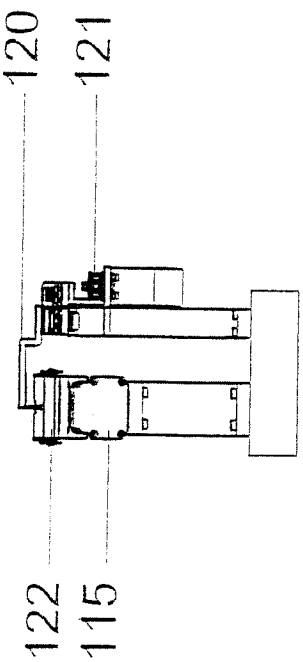

FIG 11B

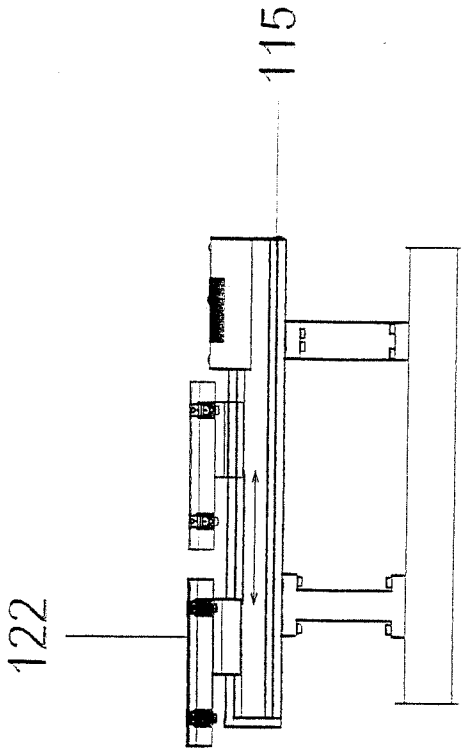

FIG 11C

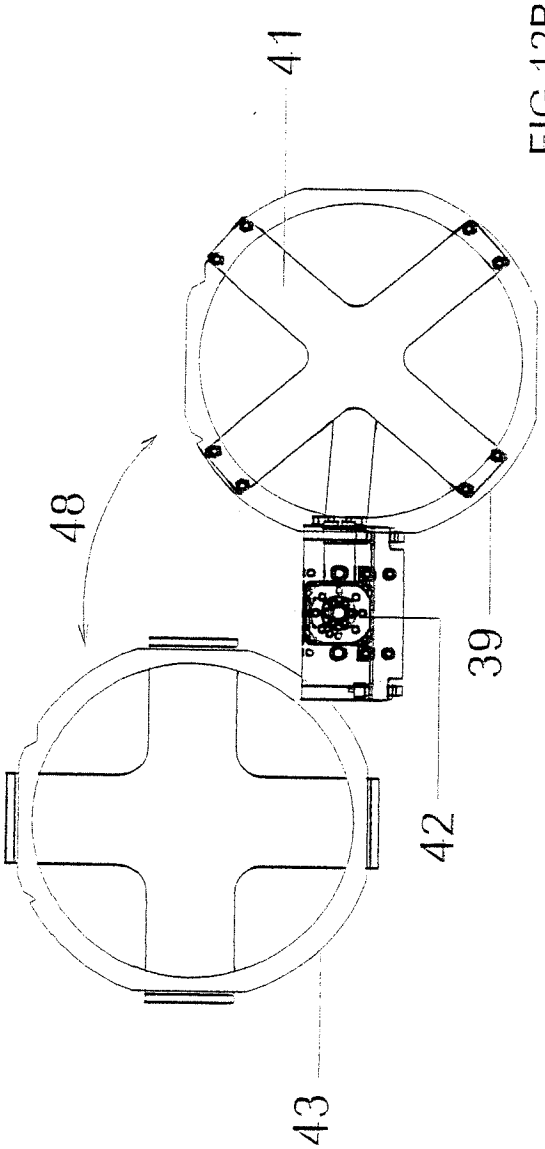

FIG 12B

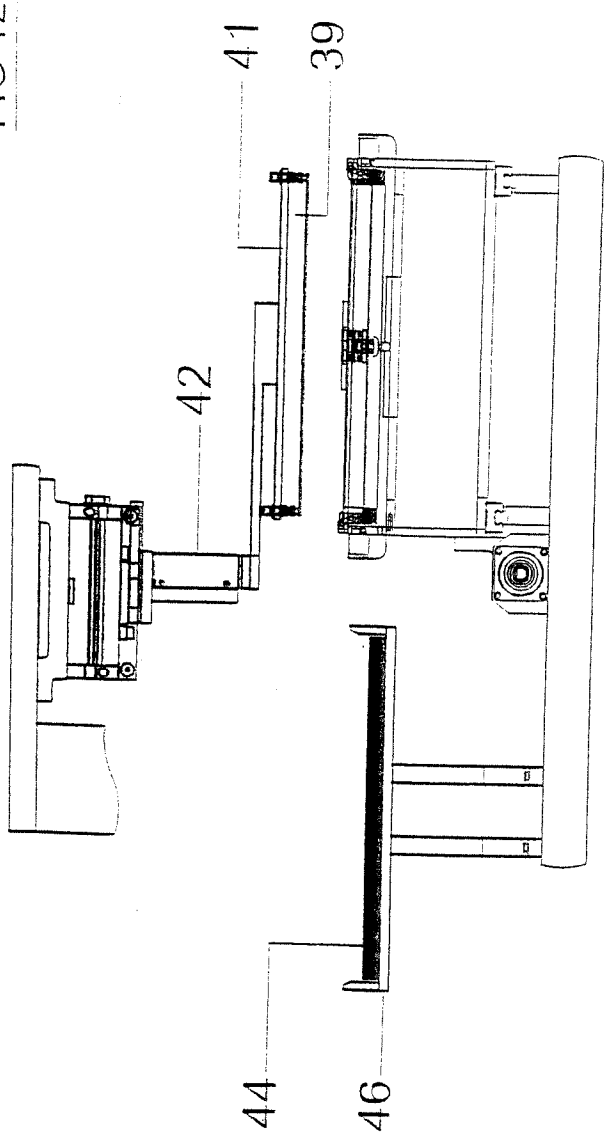

FIG 12C

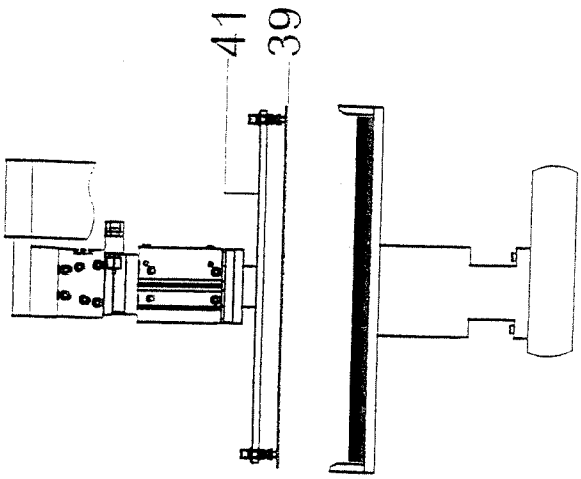

FIG 12A

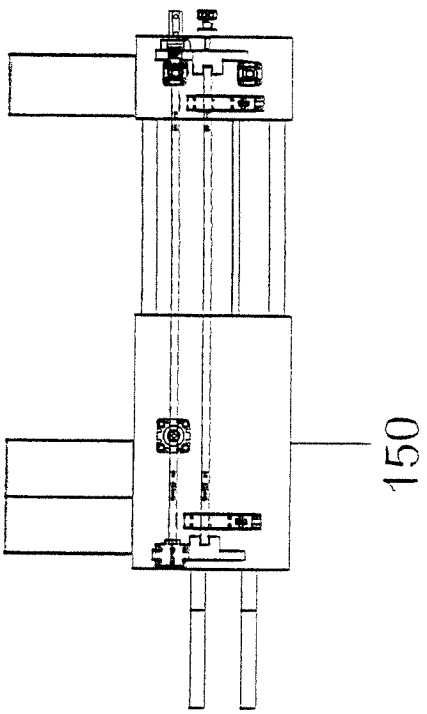

FIG 13A

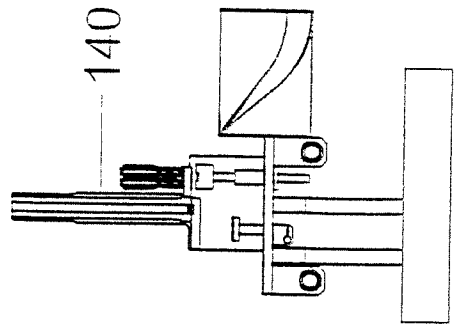

FIG 13C

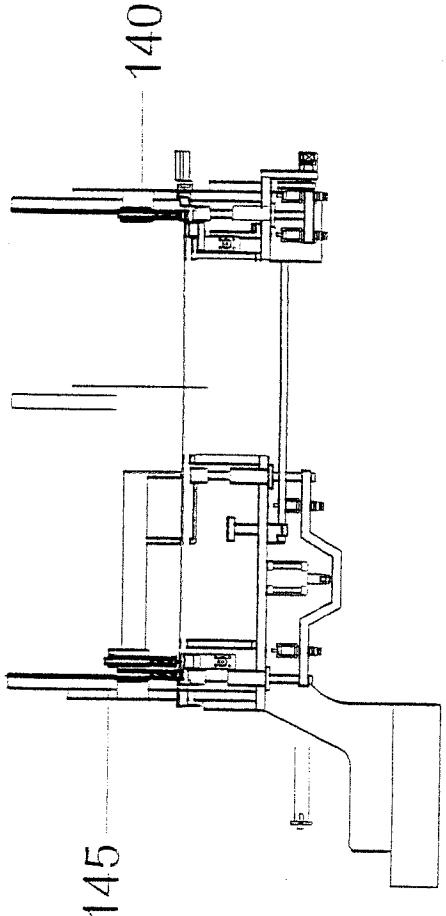

FIG 13B