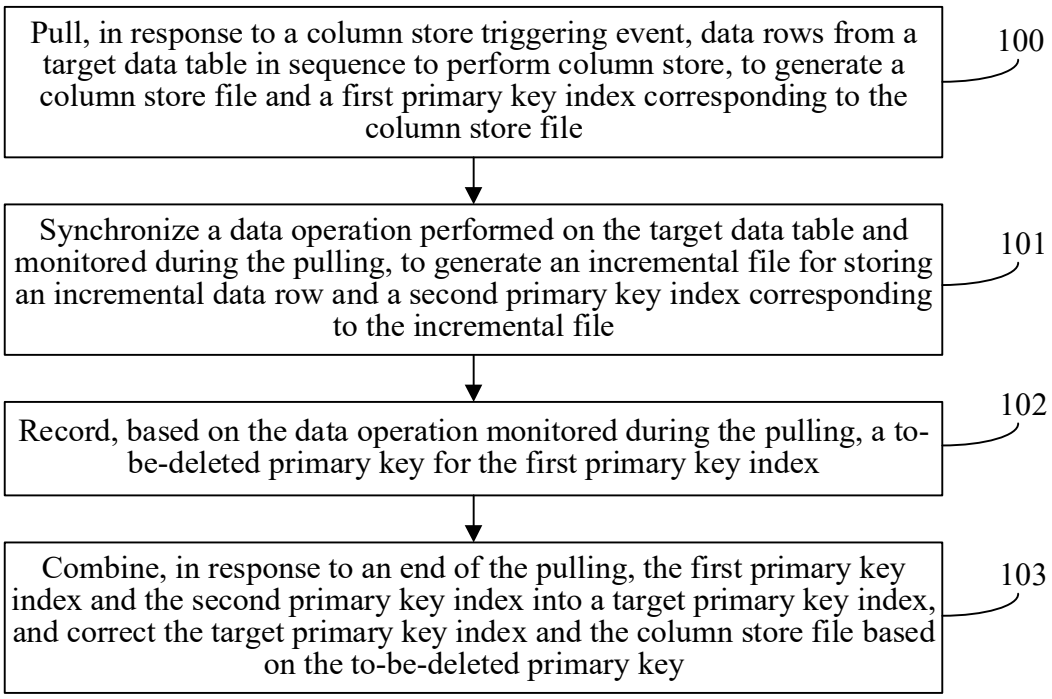
Pull, in response to a column store triggering event, data rows from a target data table in sequence to perform column store, to generate a column store file and a first primary key index corresponding to the column store file
100
Synchronize a data operation performed on the target data table and monitored during the pulling, to generate an incremental file for storing an incremental data row and a second primary key index corresponding to the incremental file
101
Record, based on the data operation monitored during the pulling, a to-be-deleted primary key for the first primary key index
102
Combine, in response to an end of the pulling, the first primary key index and the second primary key index into a target primary key index, and correct the target primary key index and the column store file based on the to-be-deleted primary key
103

FIG. 1

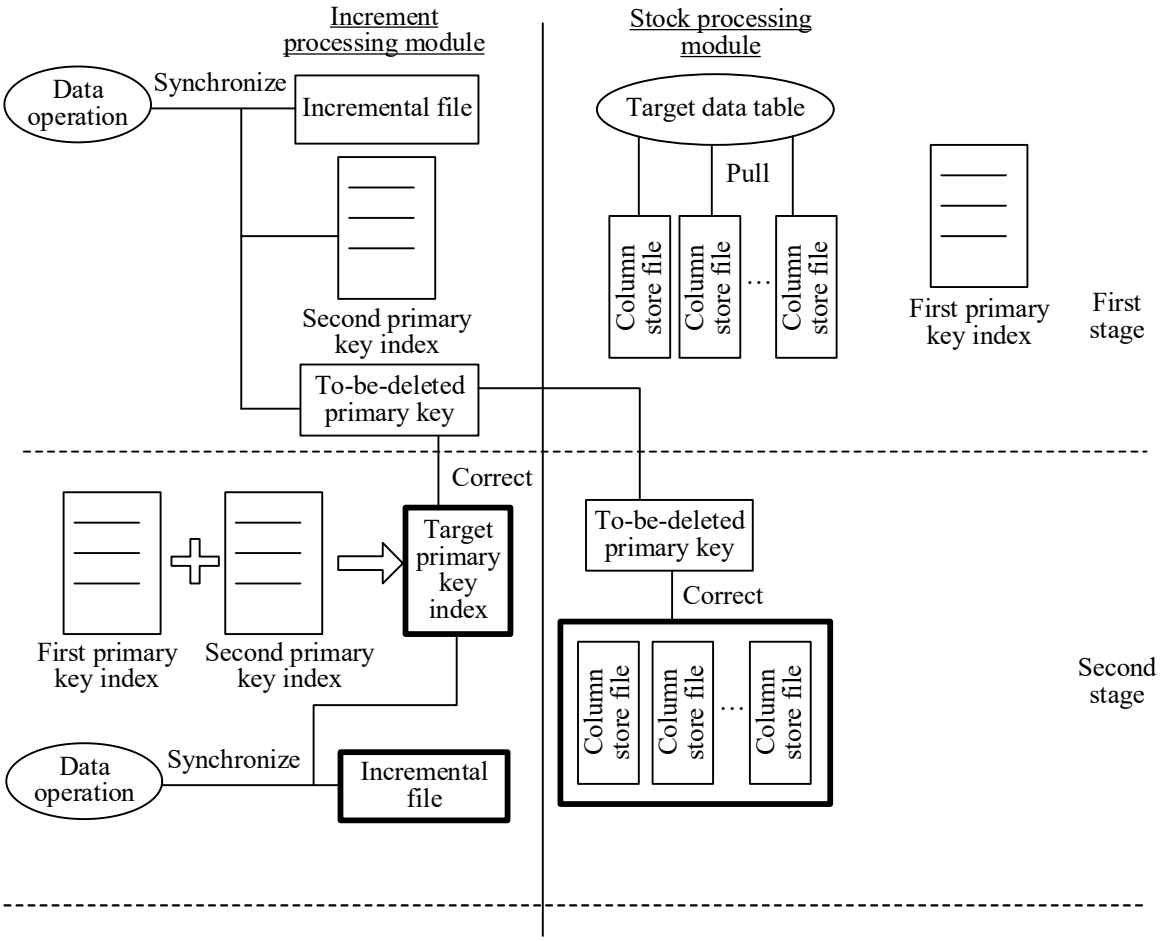
Increment processing module
Stock processing module
Data operation
Synchronize
Incremental file
Second primary key index
To-be-deleted primary key
Target data table
Pull
Column store file
Column store file
Column store file
First primary key index
First stage
Correct
Target primary key index
First primary key index
Second primary key index
To-be-deleted primary key
Correct
Column store file
Column store file
Column store file
Second stage
Data operation
Synchronize
Incremental file

FIG. 2

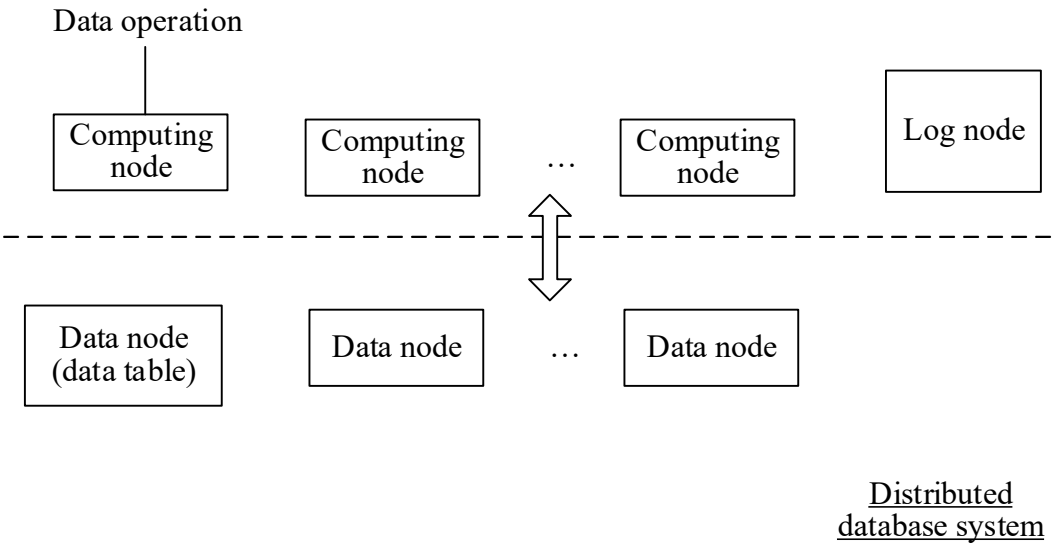
Data operation
Computing node
Computing node
…
Computing node
Log node
Data node (data table)
Data node
…
Data node
Distributed database system

FIG. 3

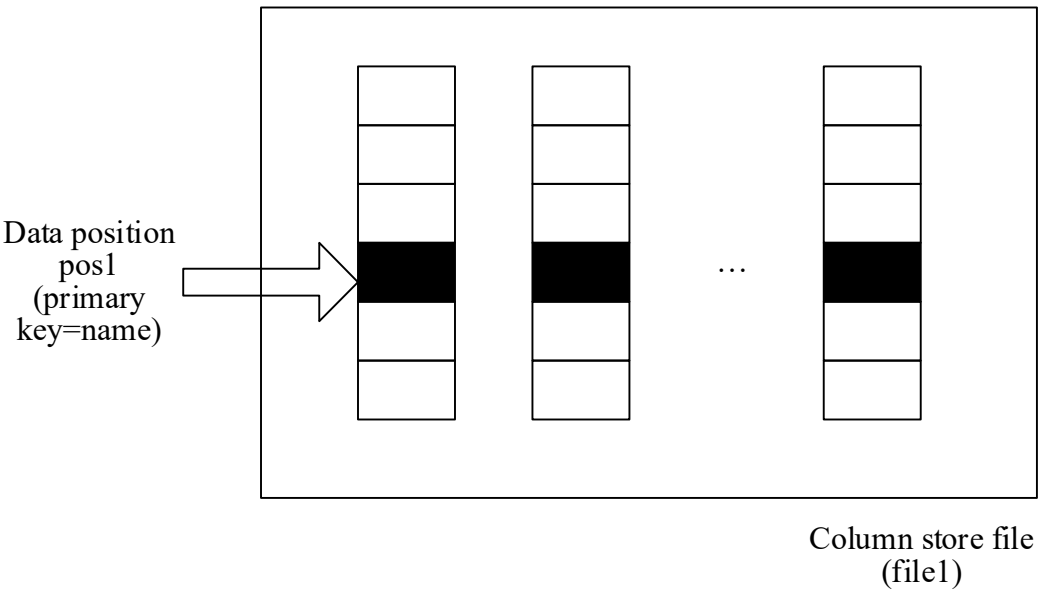
Data position pos1 (primary key=name)
…
Column store file (file1)

FIG. 4

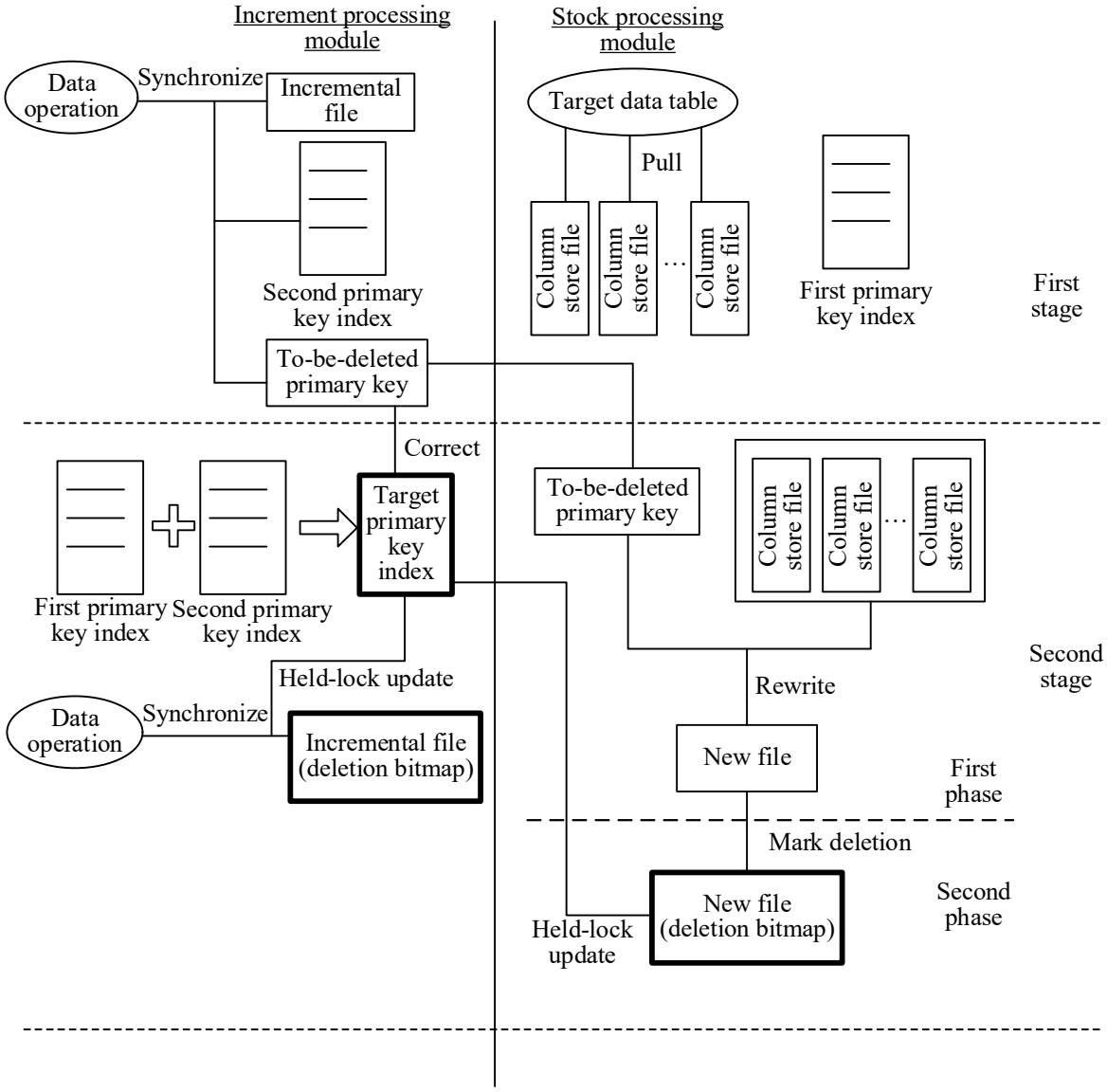
Increment processing module
Stock processing module
Data operation
Synchronize
Incremental file
Second primary key index
To-be-deleted primary key
Target data table
Pull
Column store file
Column store file
Column store file
First primary key index
First stage
Correct
Target primary key index
First primary key index
Second primary key index
Held-lock update
Data operation
Synchronize
Incremental file (deletion bitmap)
To-be-deleted primary key
Column store file
Column store file
Column store file
Second stage
Rewrite
New file
First phase
Mark deletion
New file (deletion bitmap)
Held-lock update
Second phase

FIG. 5

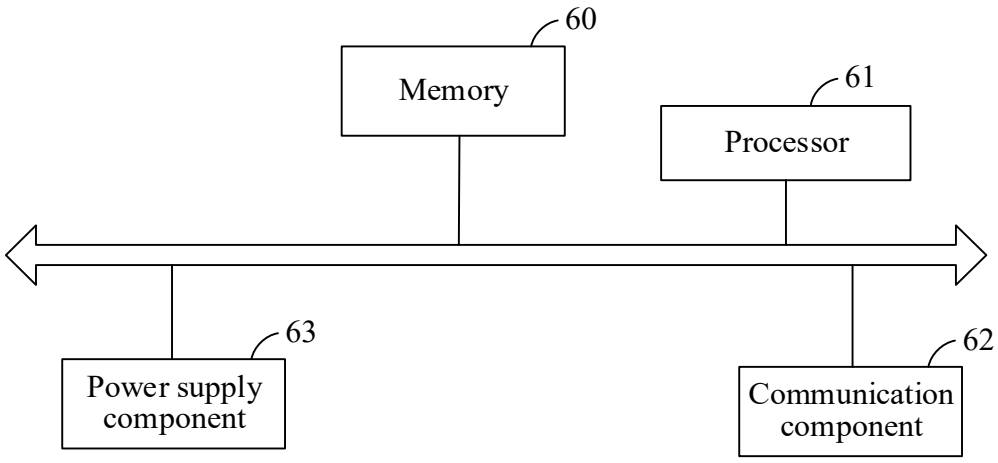
60
Memory
61
Processor
63
Power supply component
62
Communication component

FIG. 6