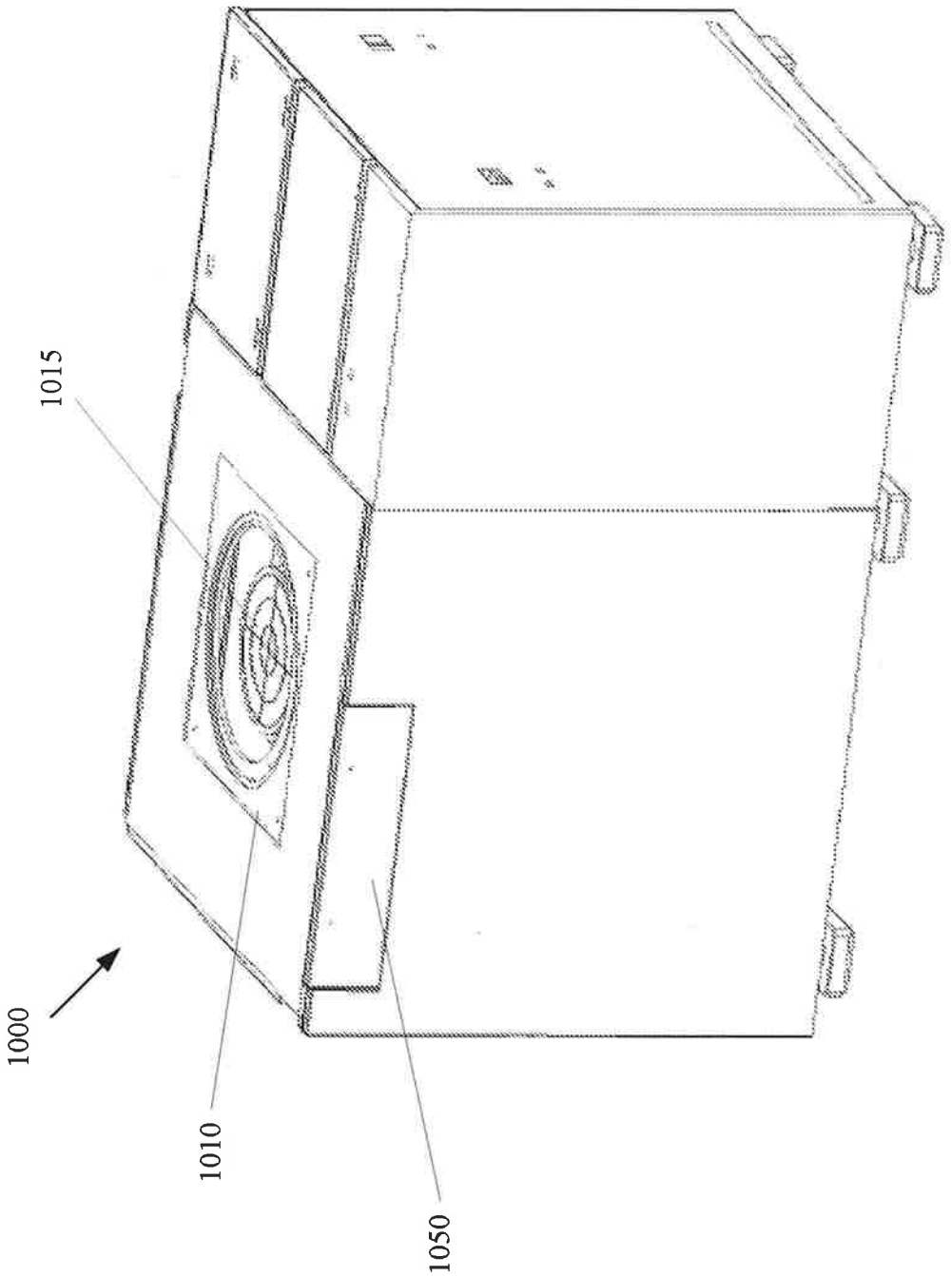

FIG. 1A

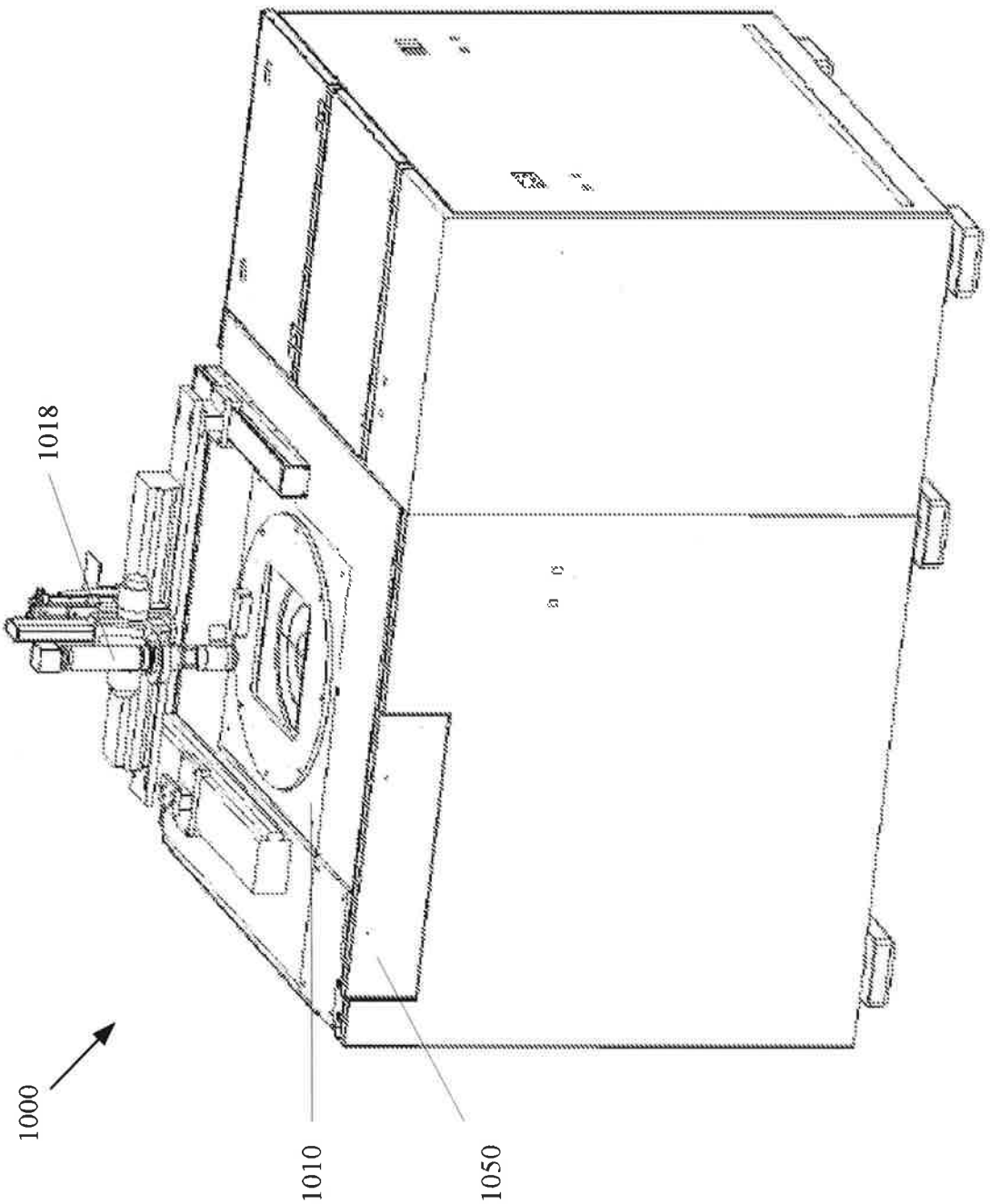

FIG. 1B

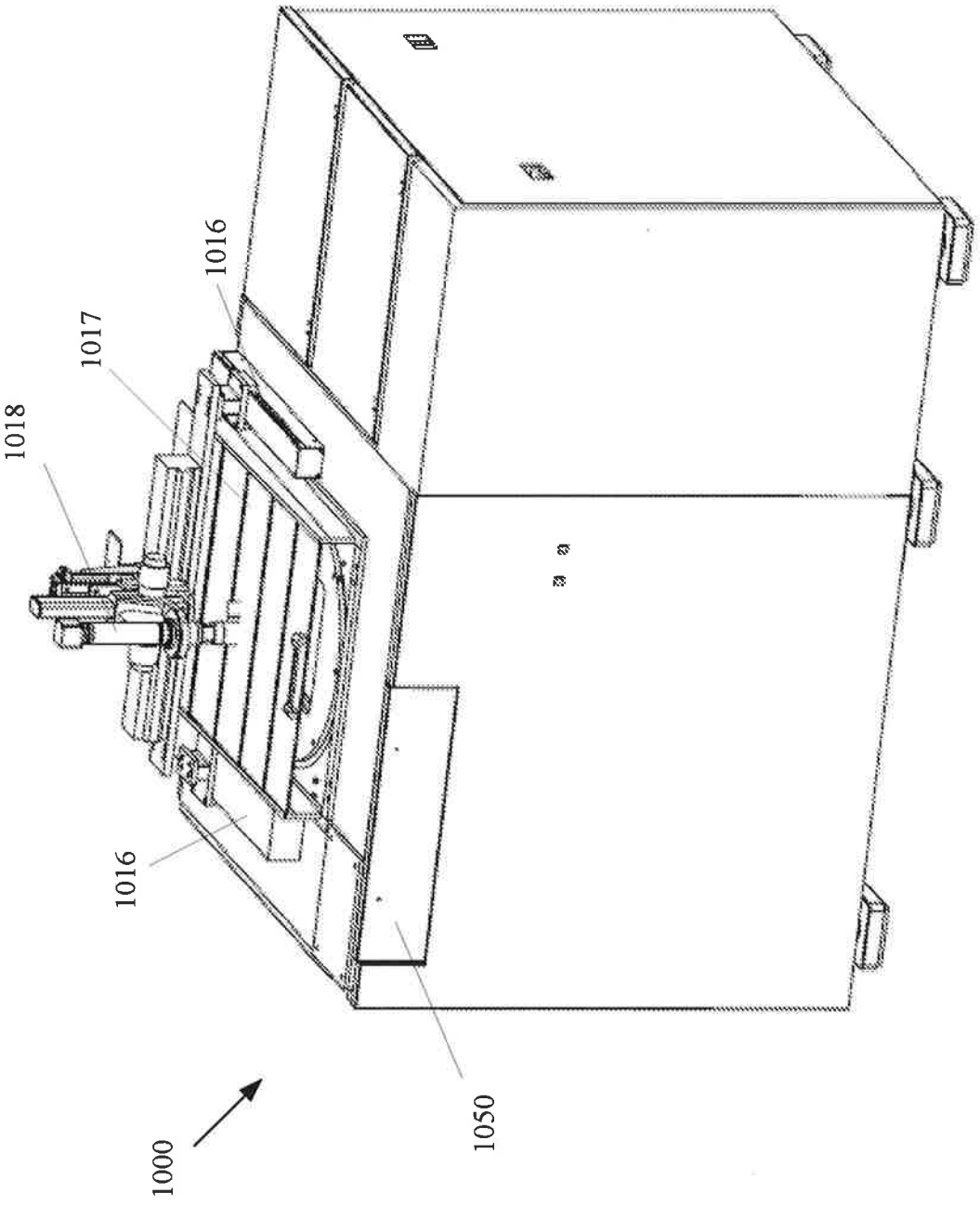

FIG. 1C

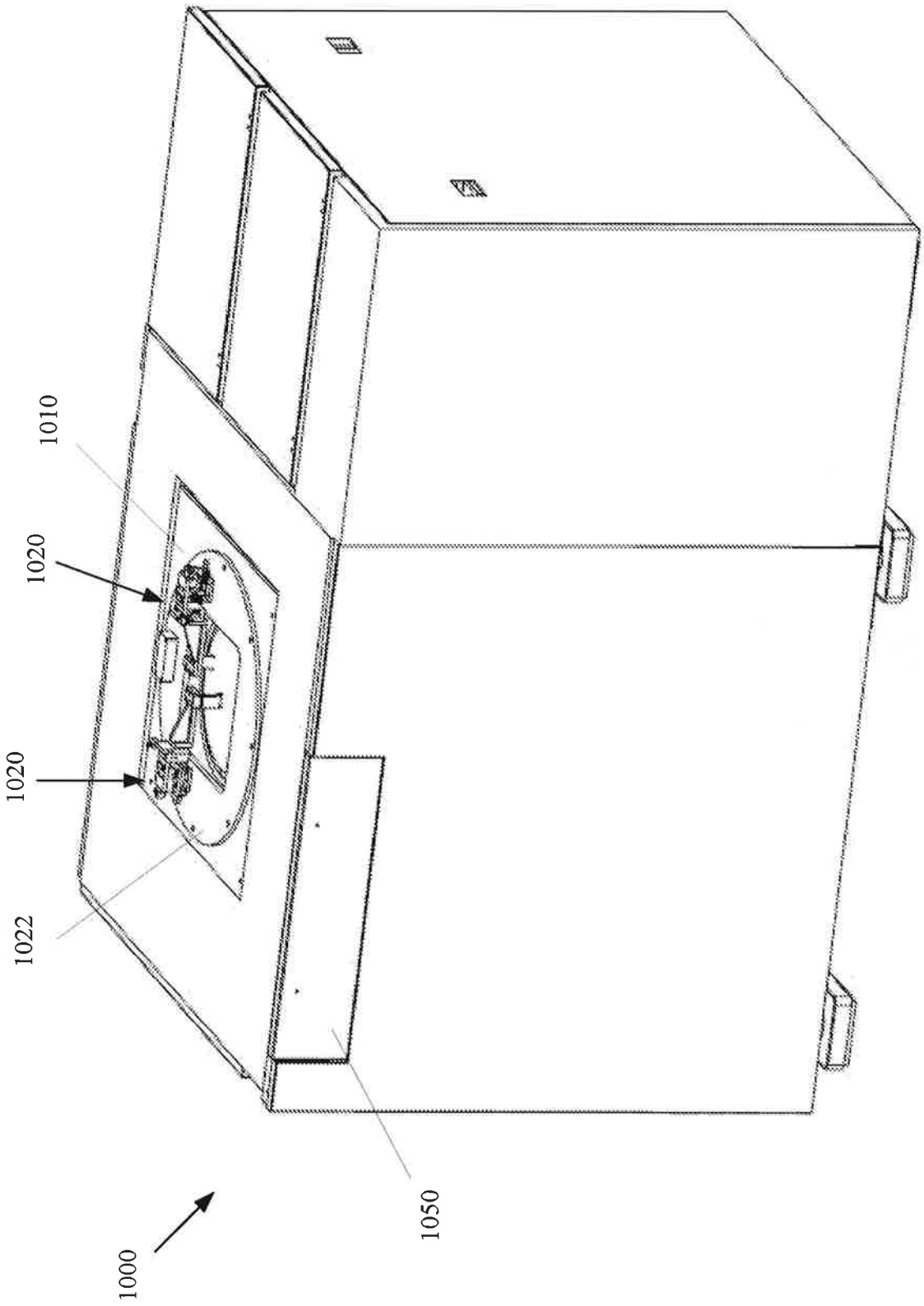

FIG. 2A

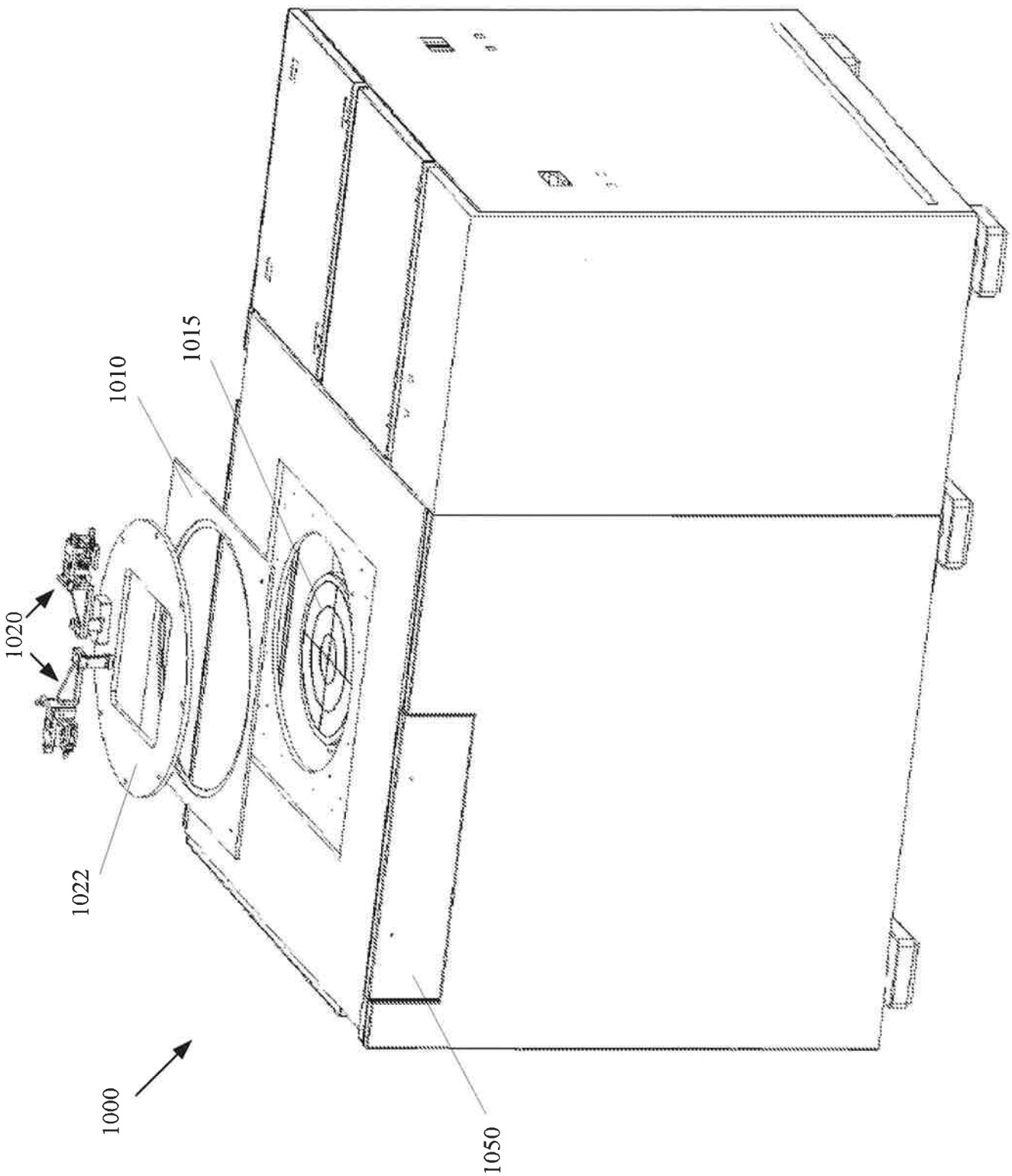

FIG. 2B

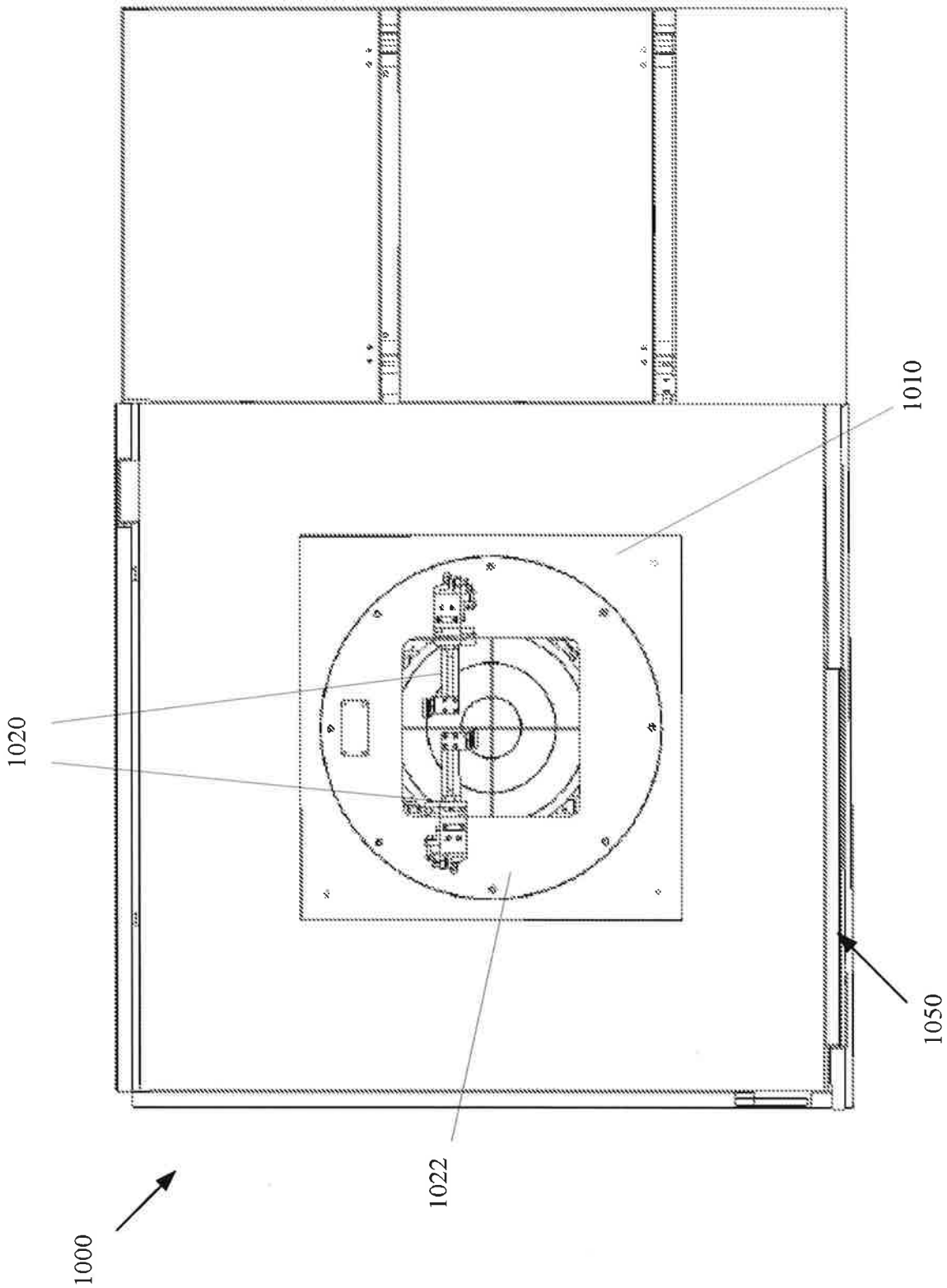

FIG. 2C

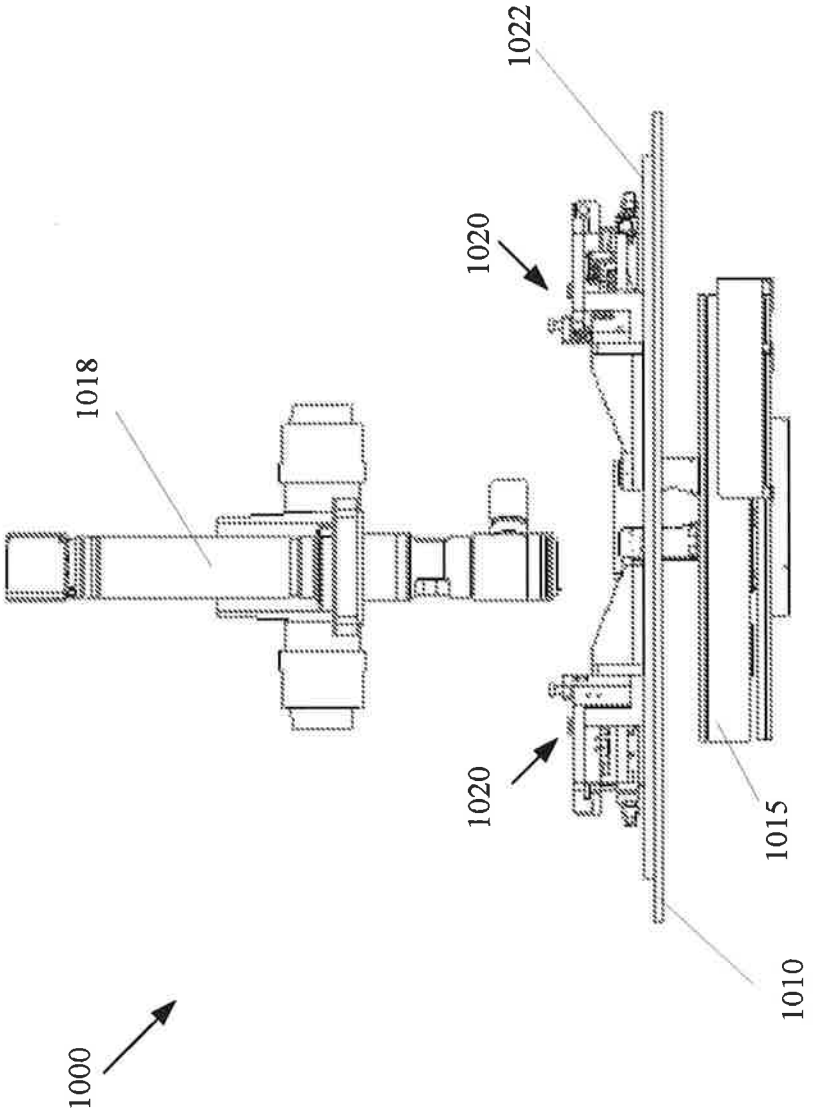

FIG. 2D

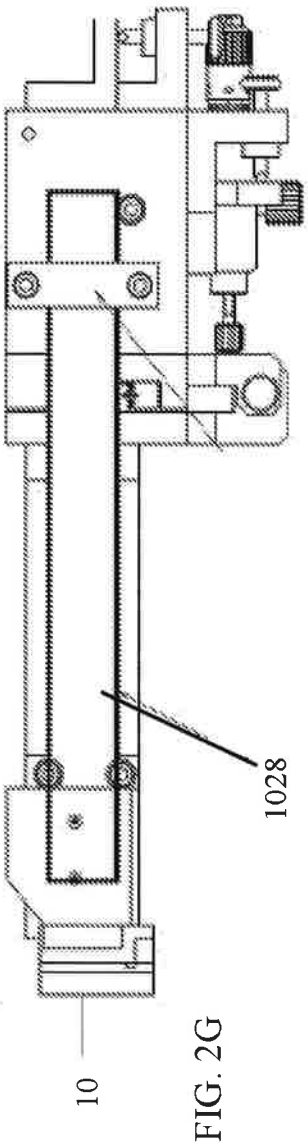

FIG. 2G

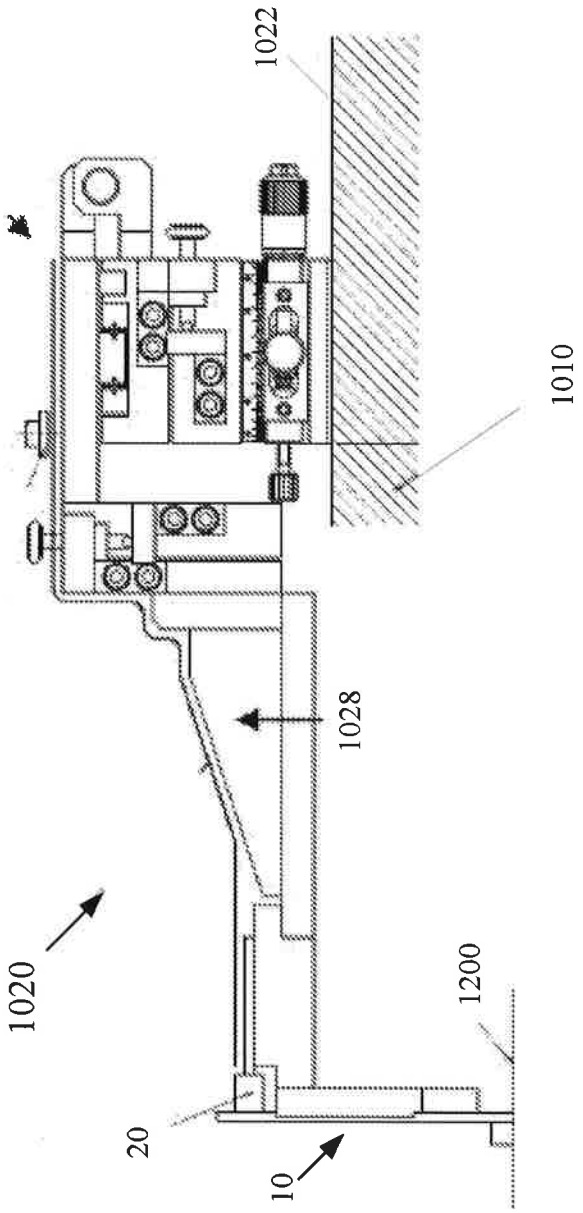

FIG. 2E

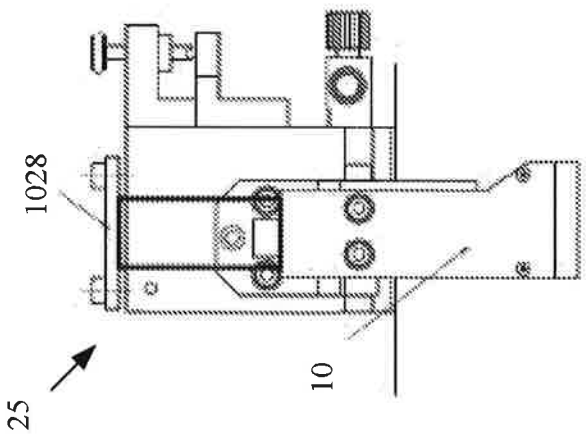

FIG. 2F

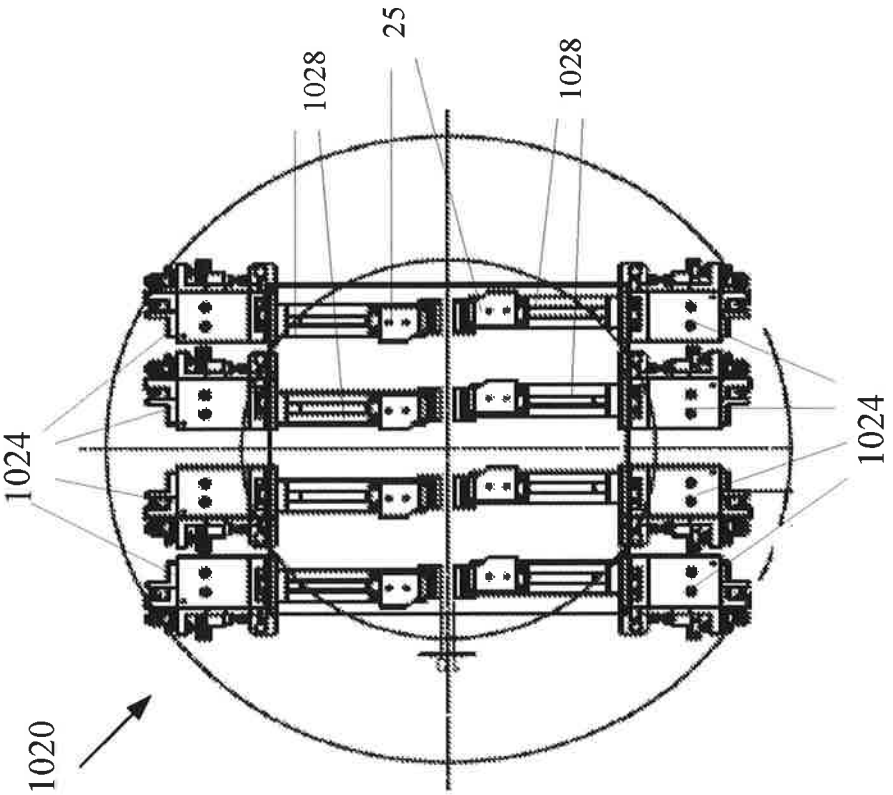

FIG. 2I

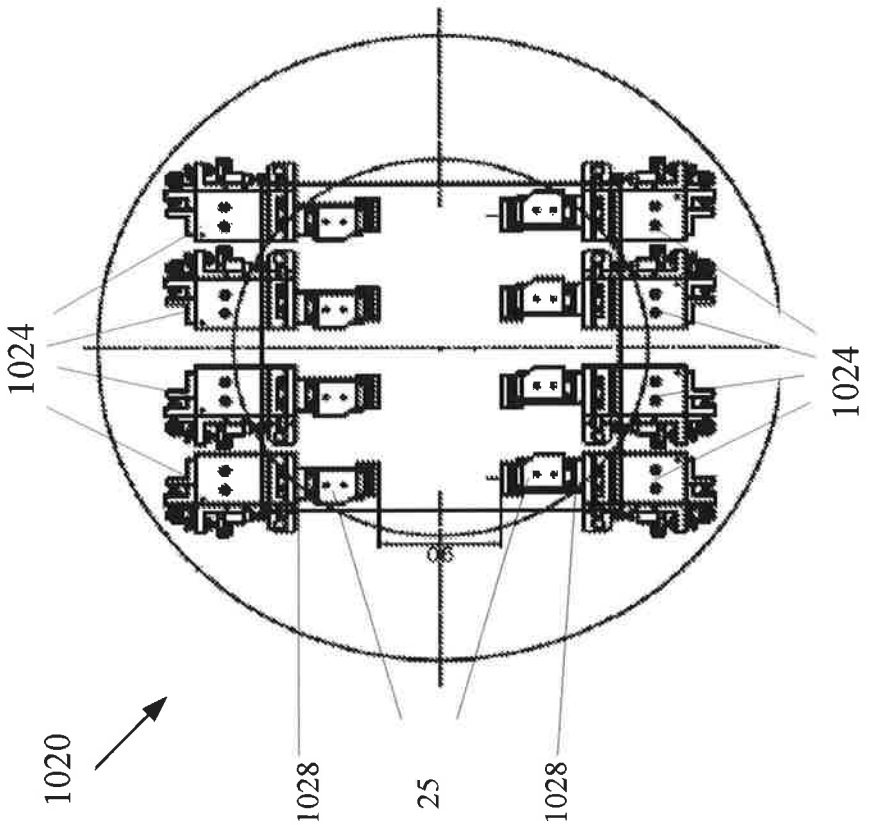

FIG. 2H

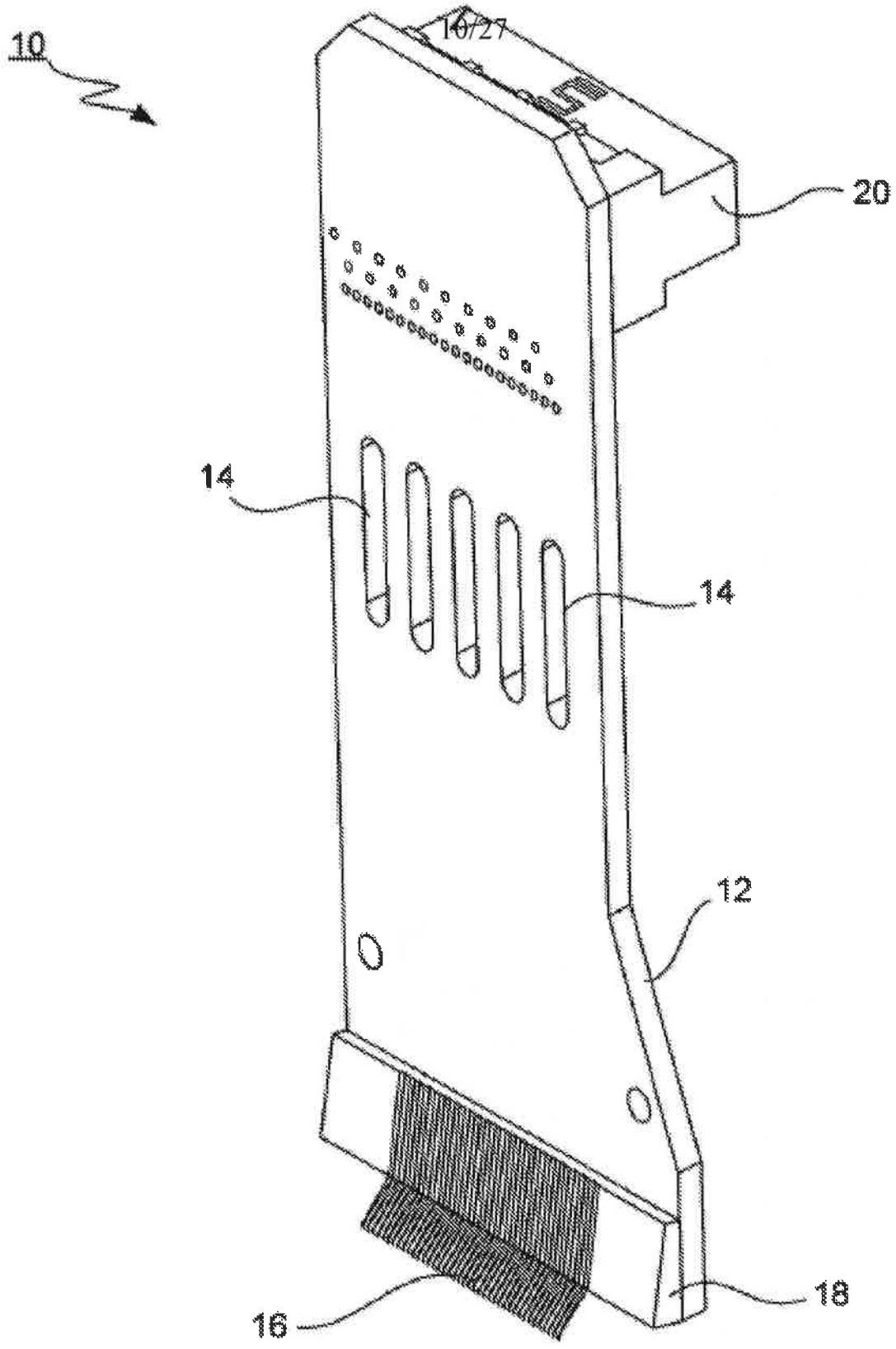

FIG. 3A

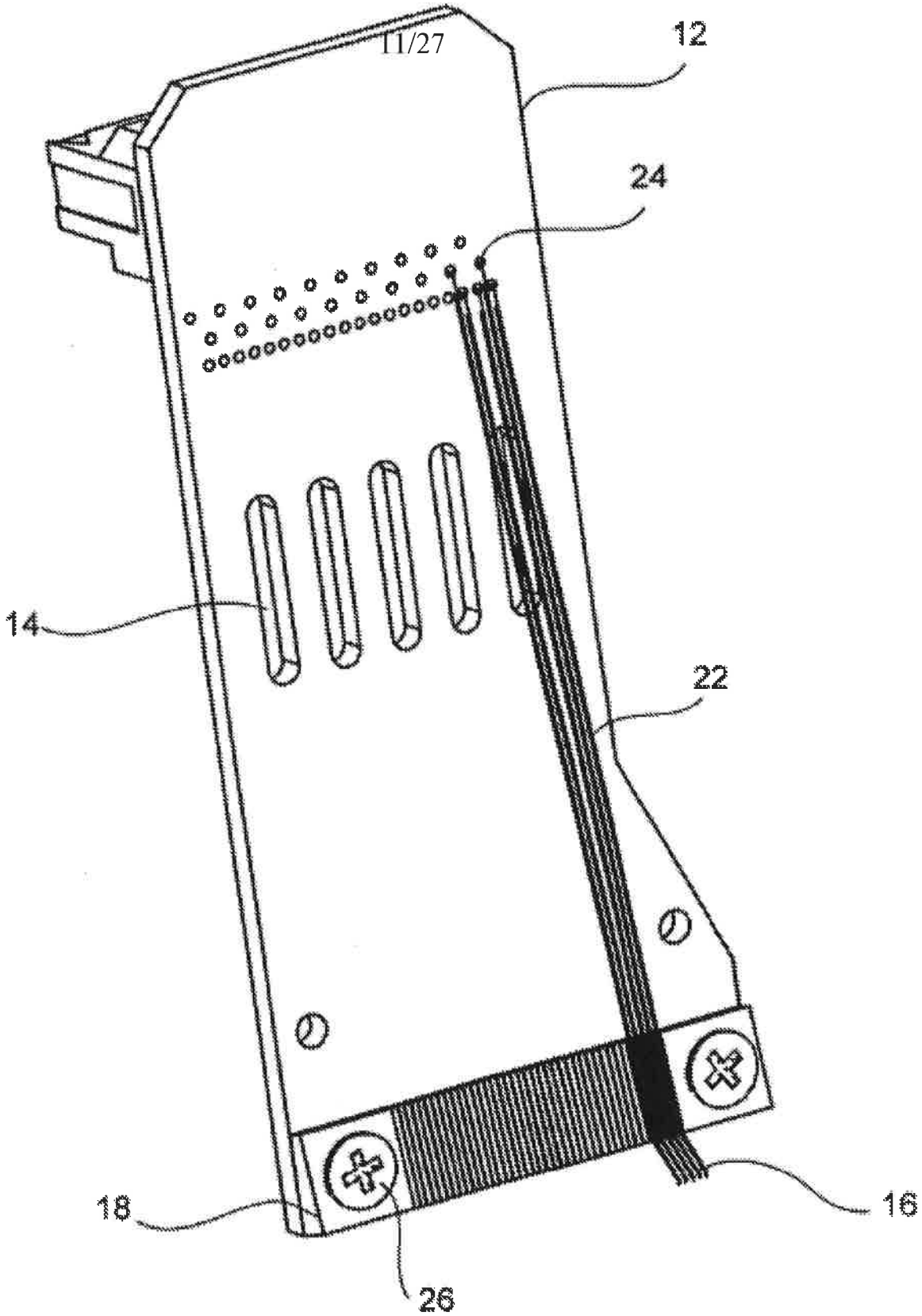

FIG. 3B

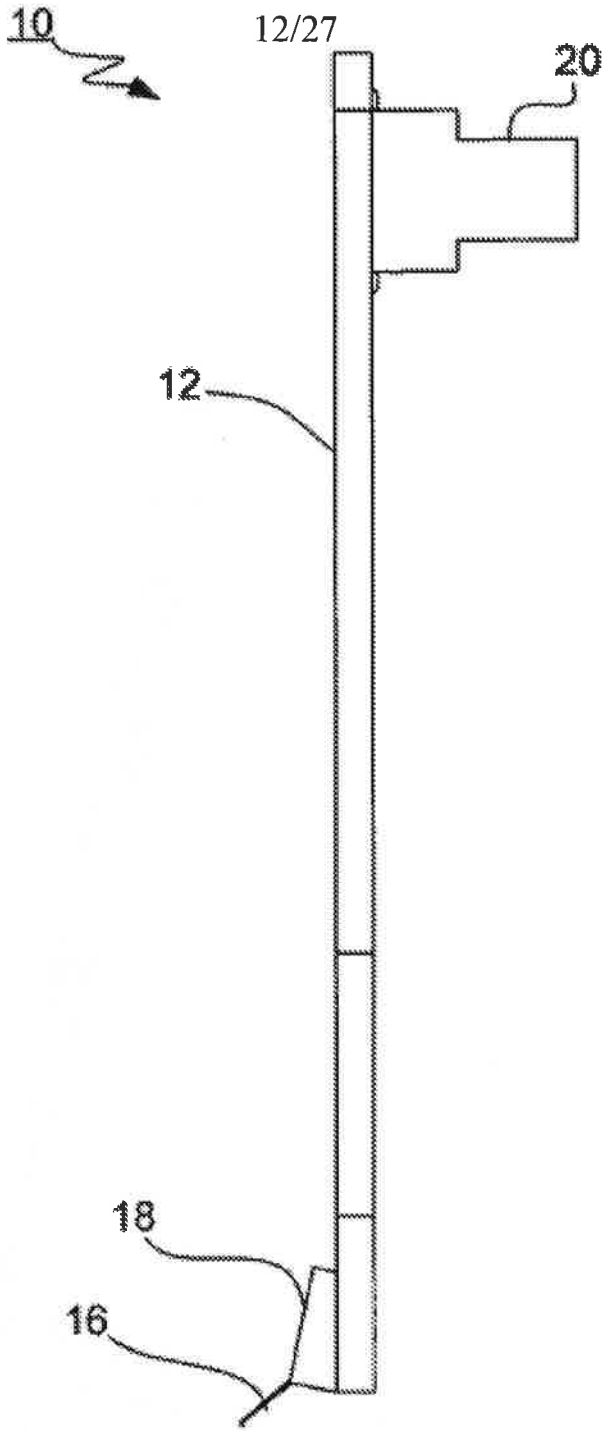

FIG. 3C

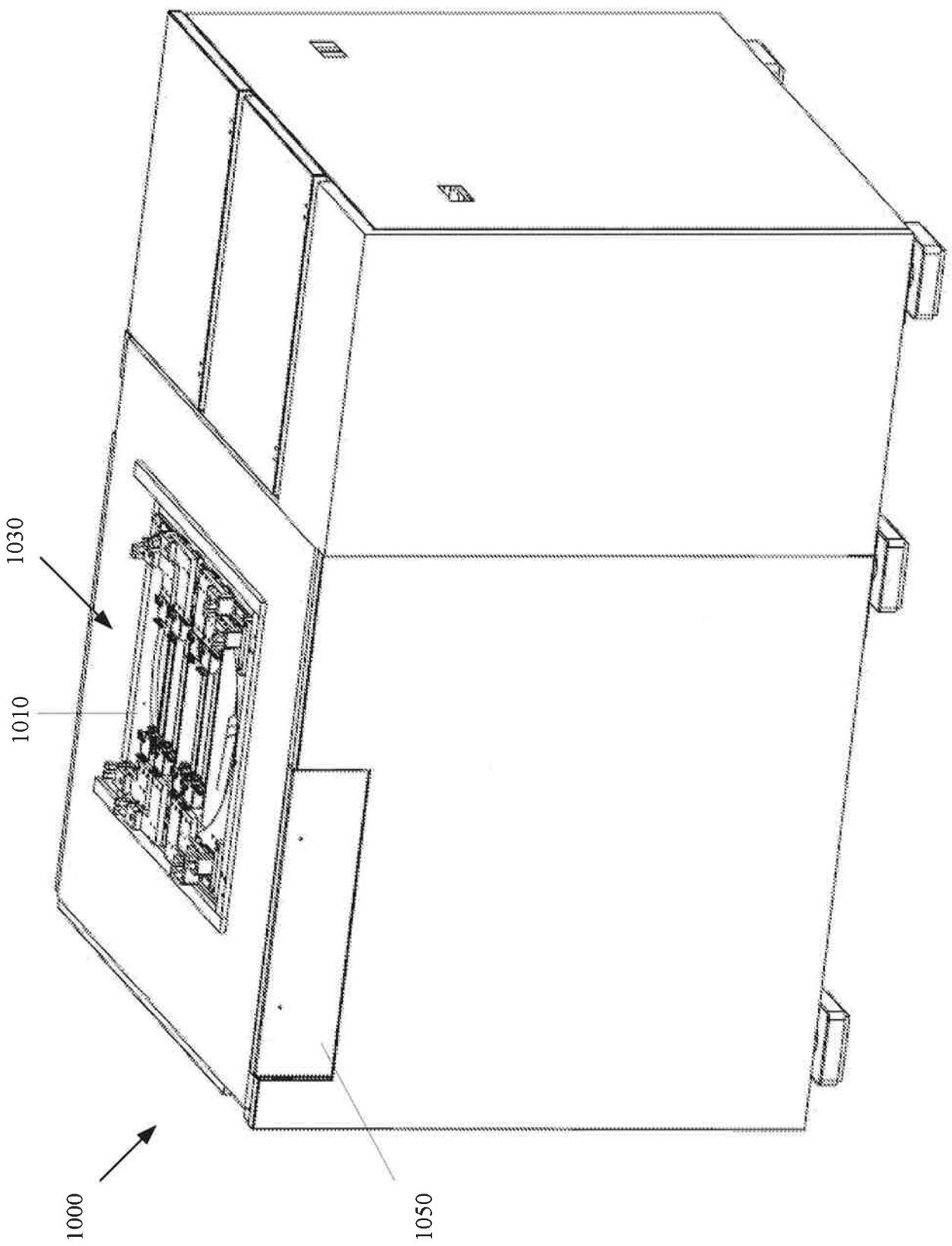

FIG. 4A

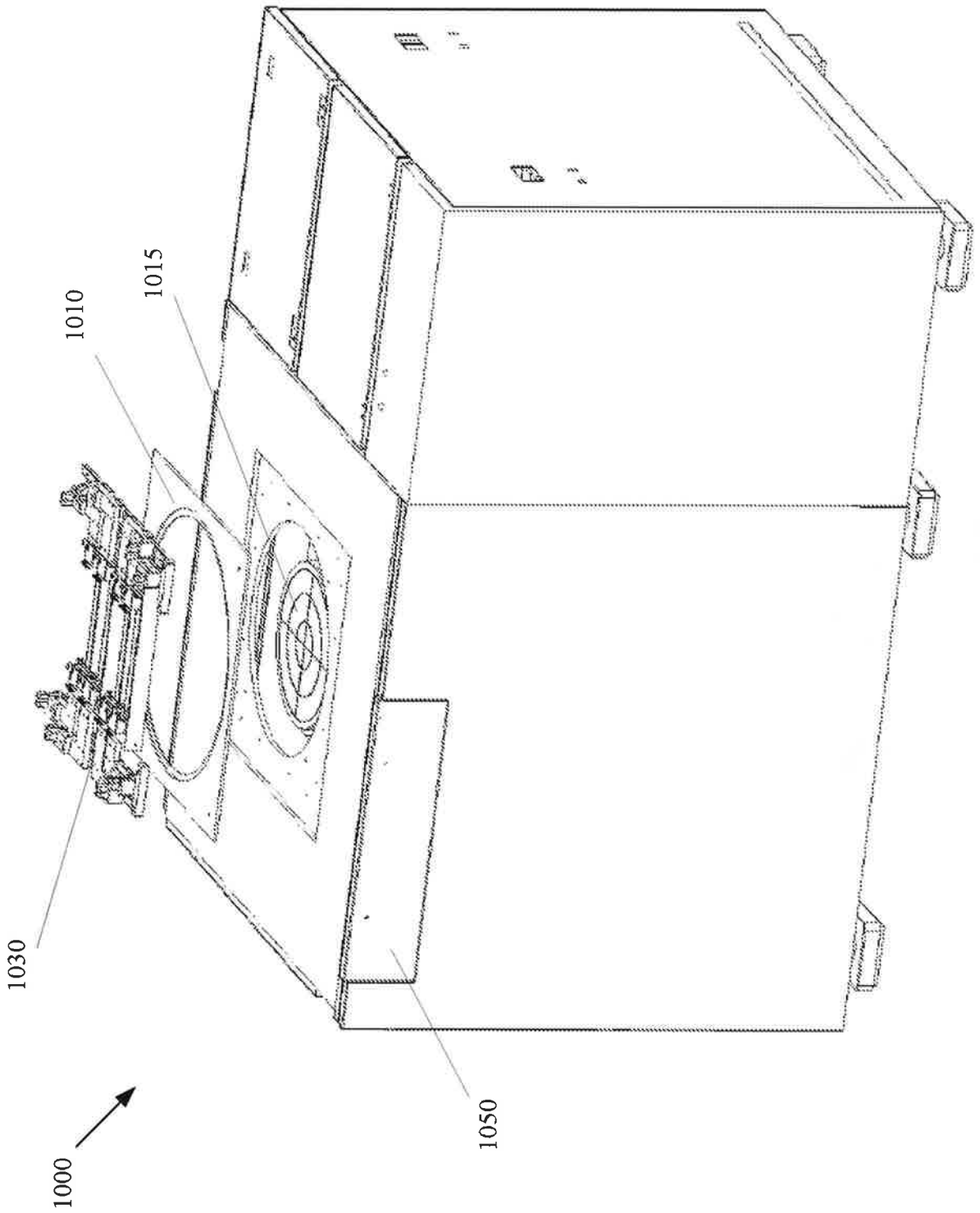

FIG. 4B

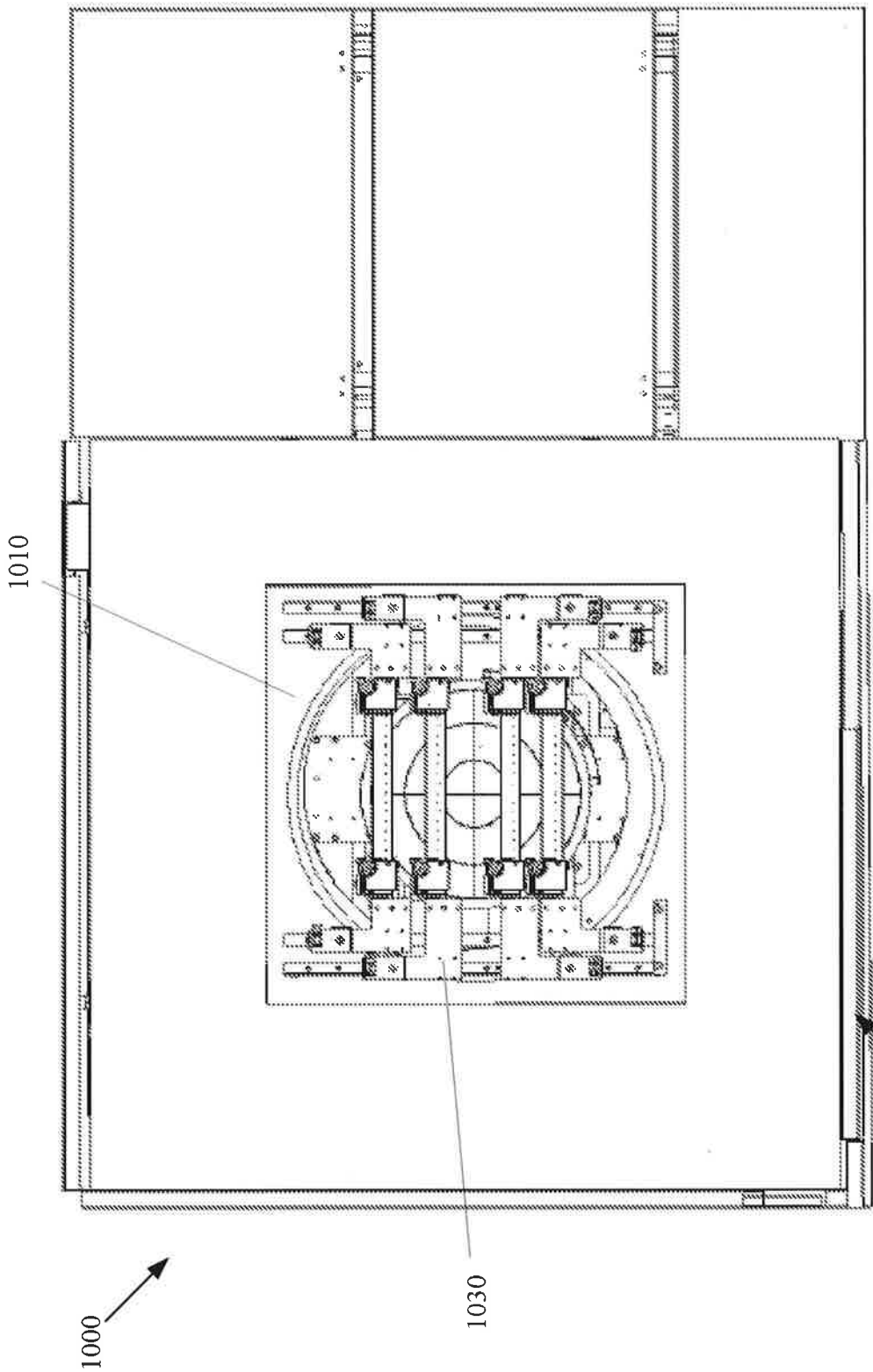

FIG. 4C

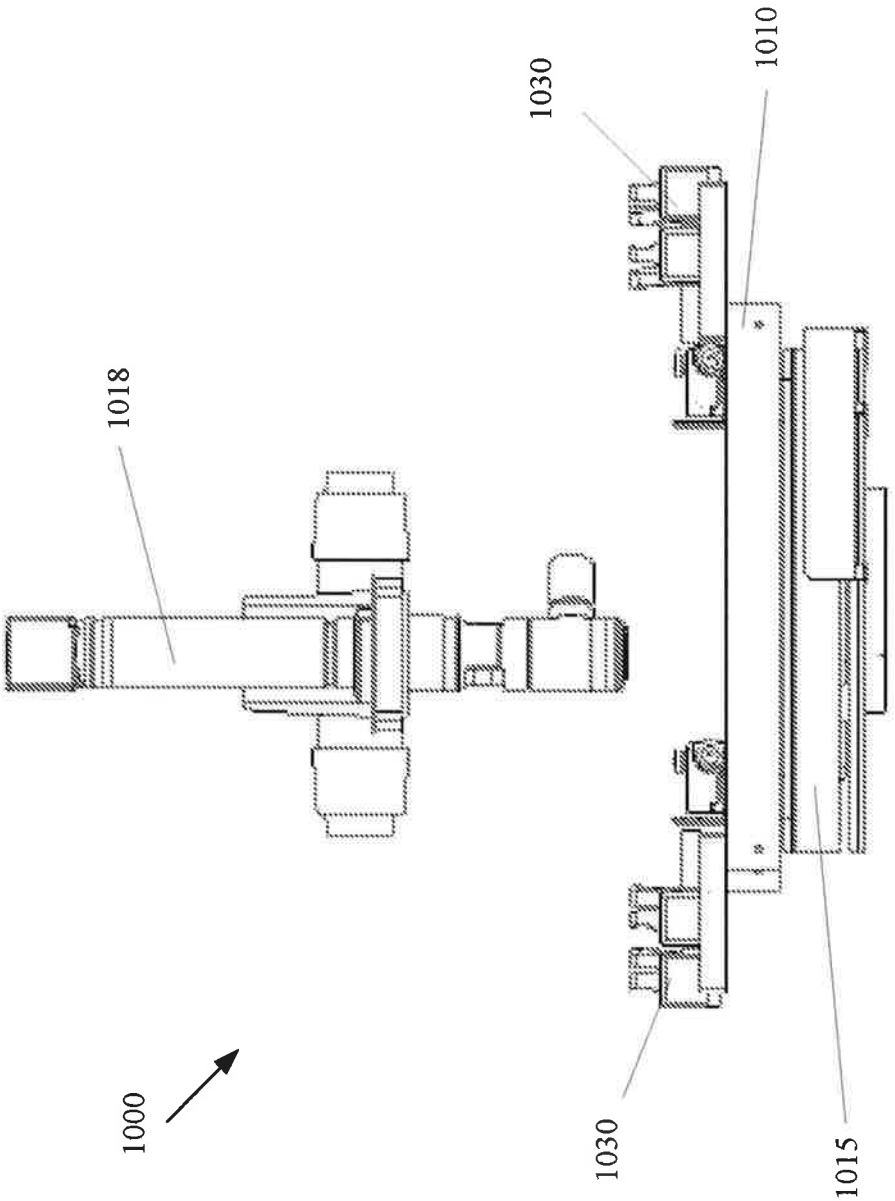

FIG. 4D

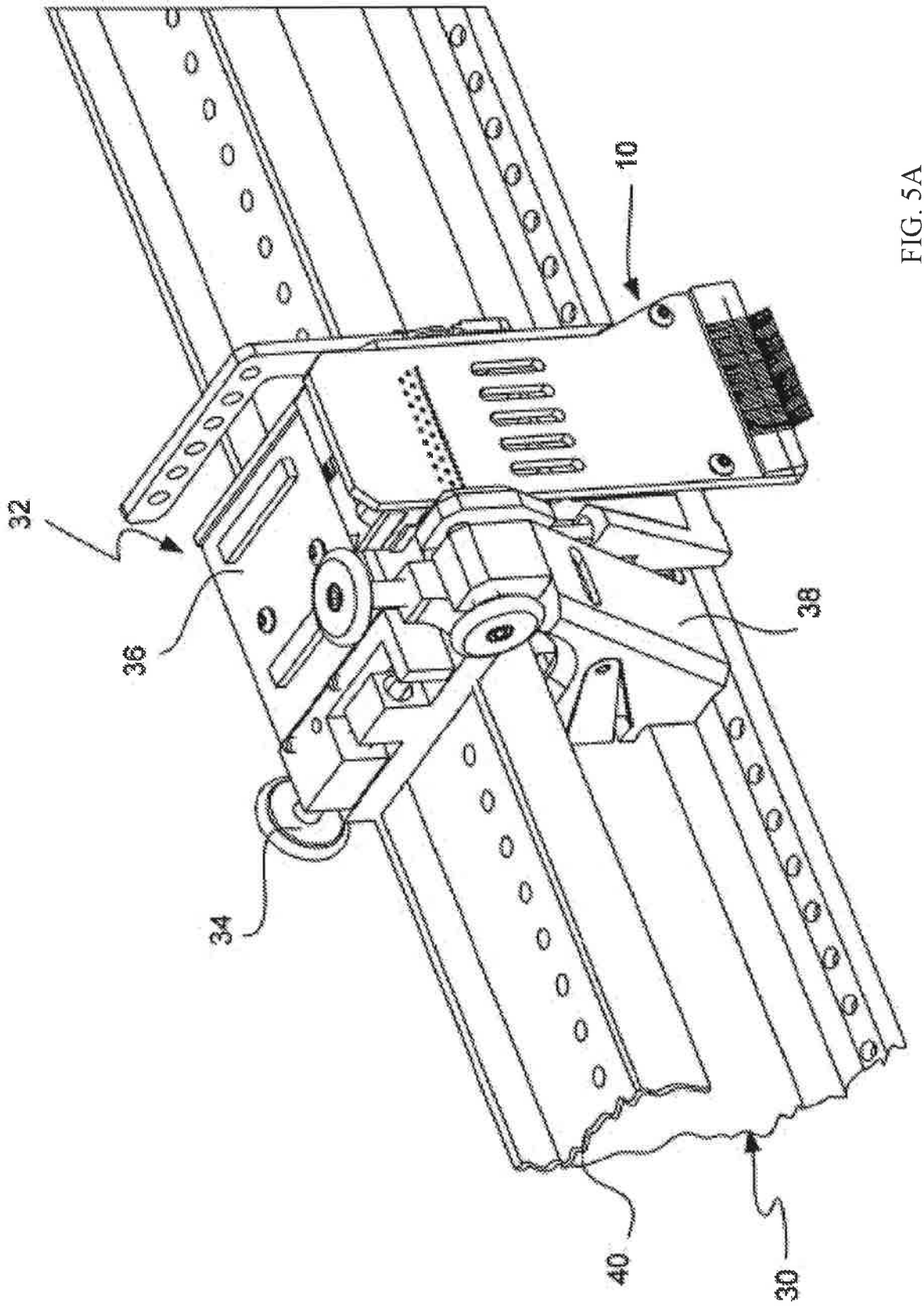

FIG. 5A

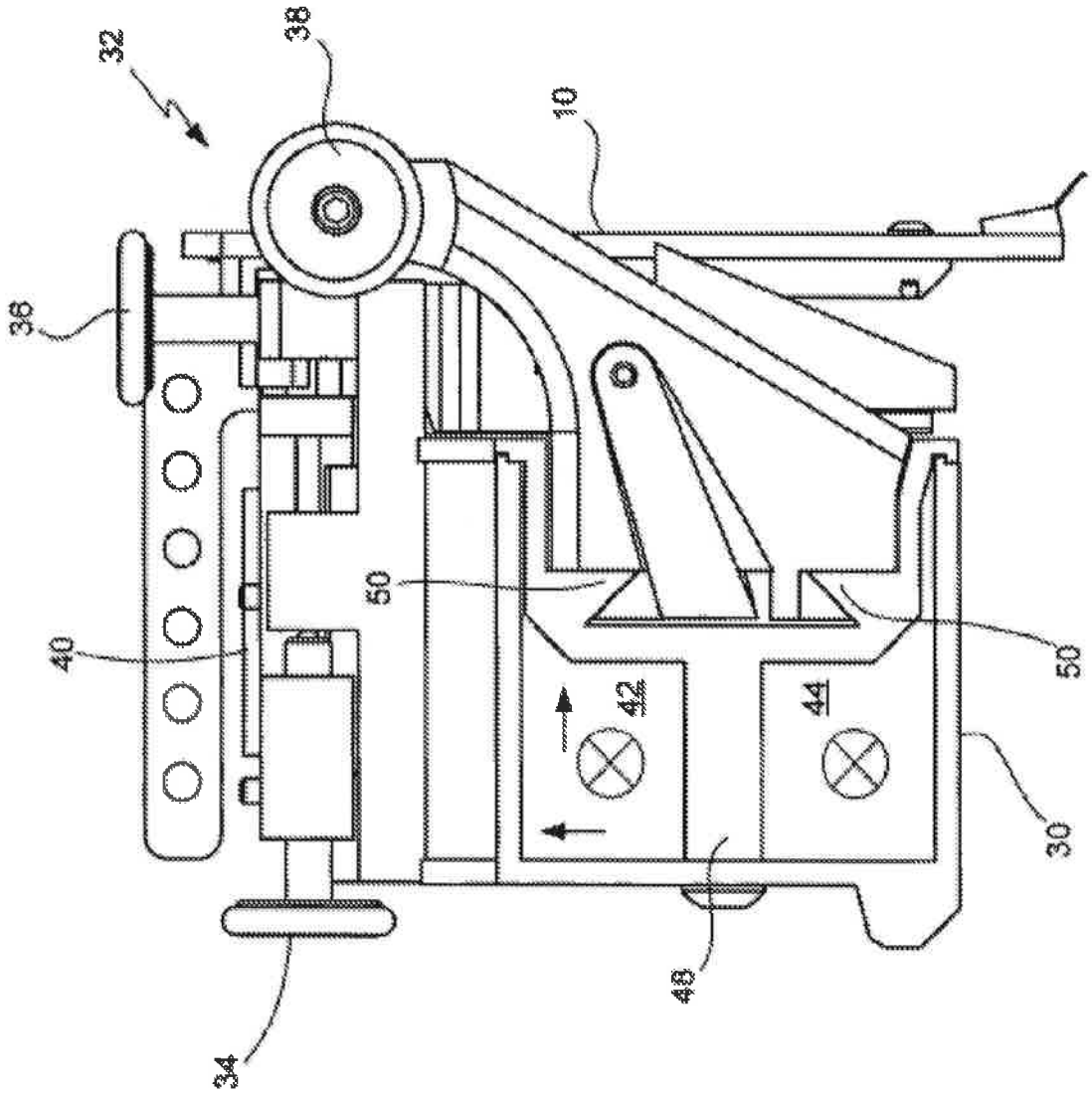

FIG. 5B

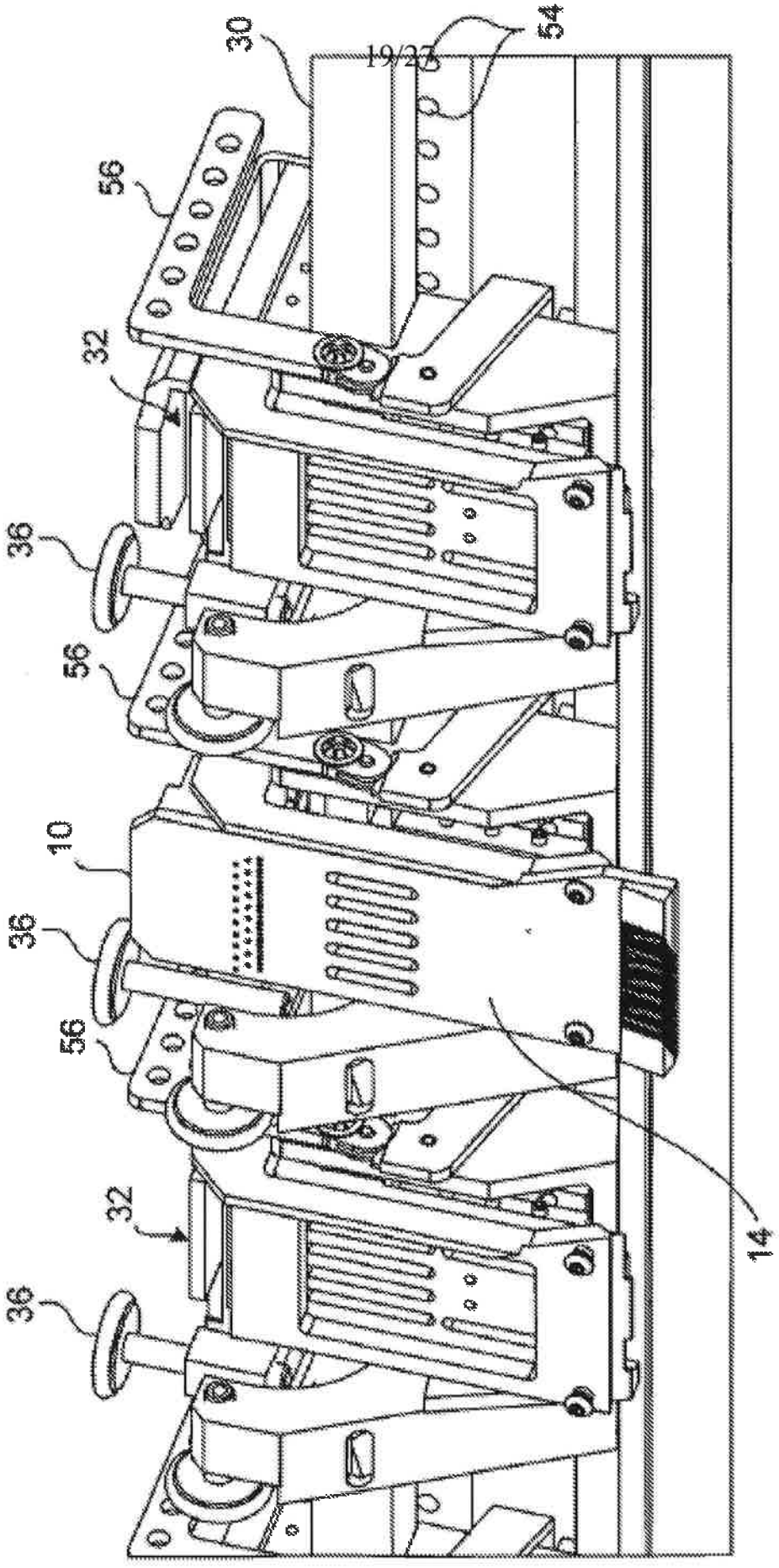

FIG. 5C

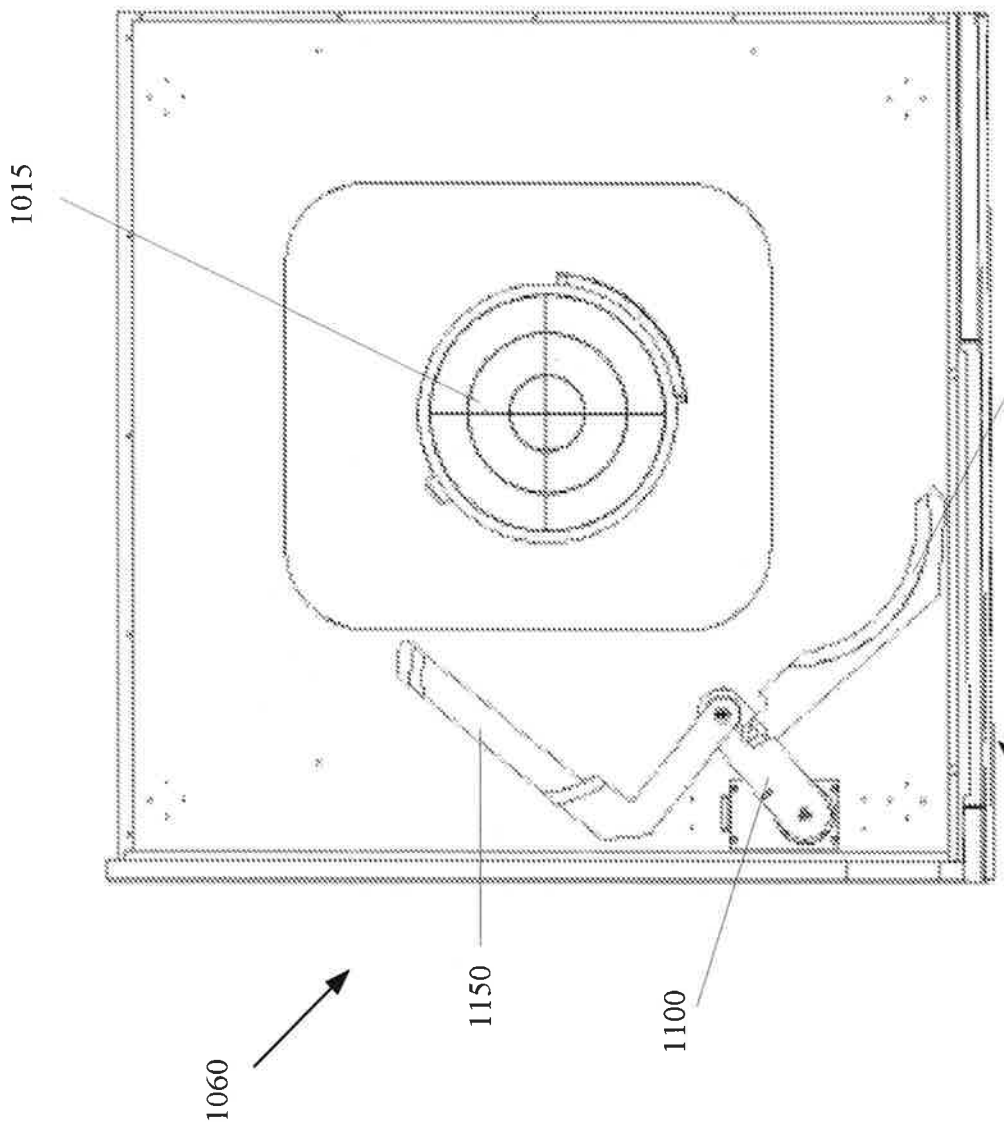

FIG. 6A

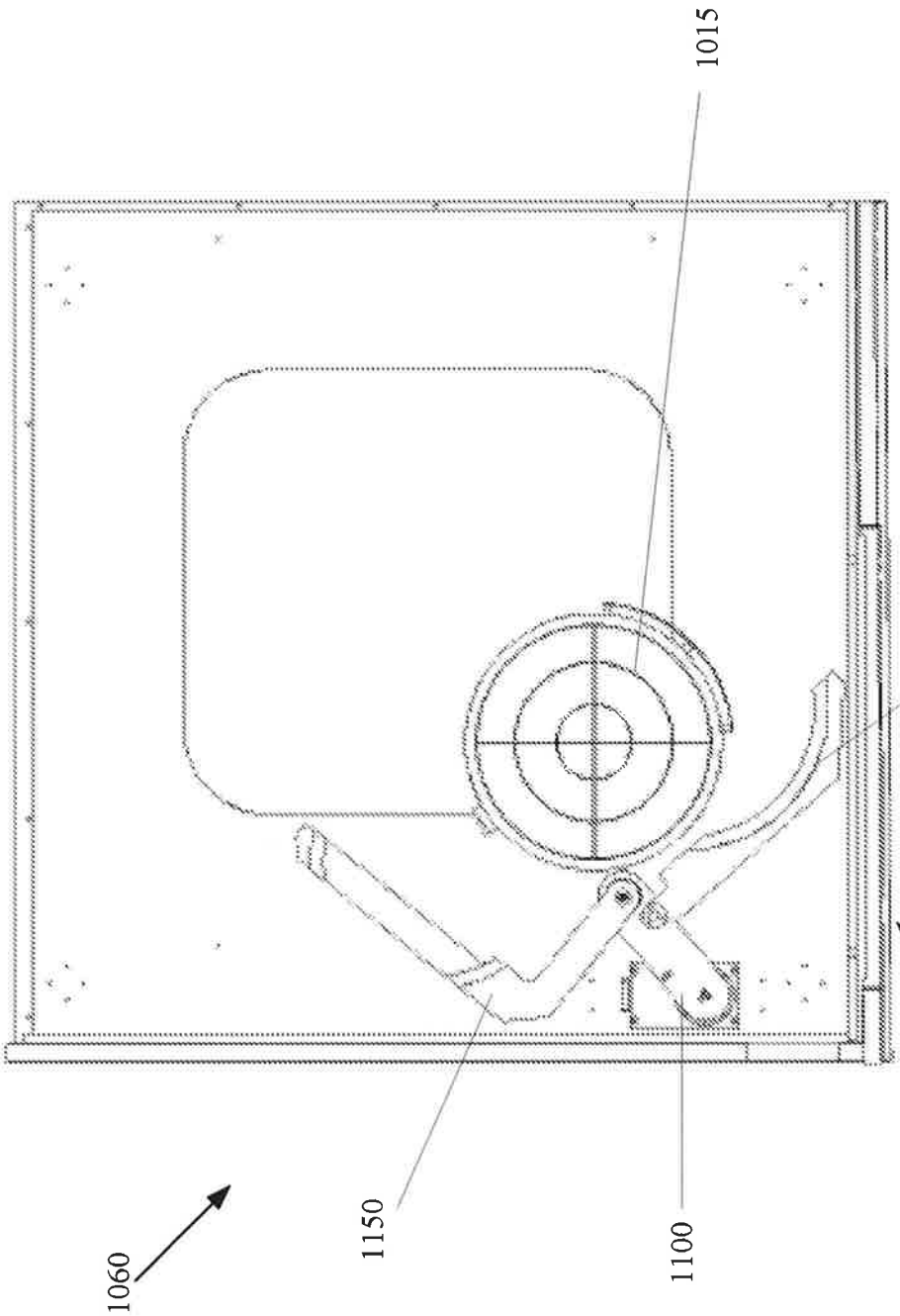

FIG. 6B

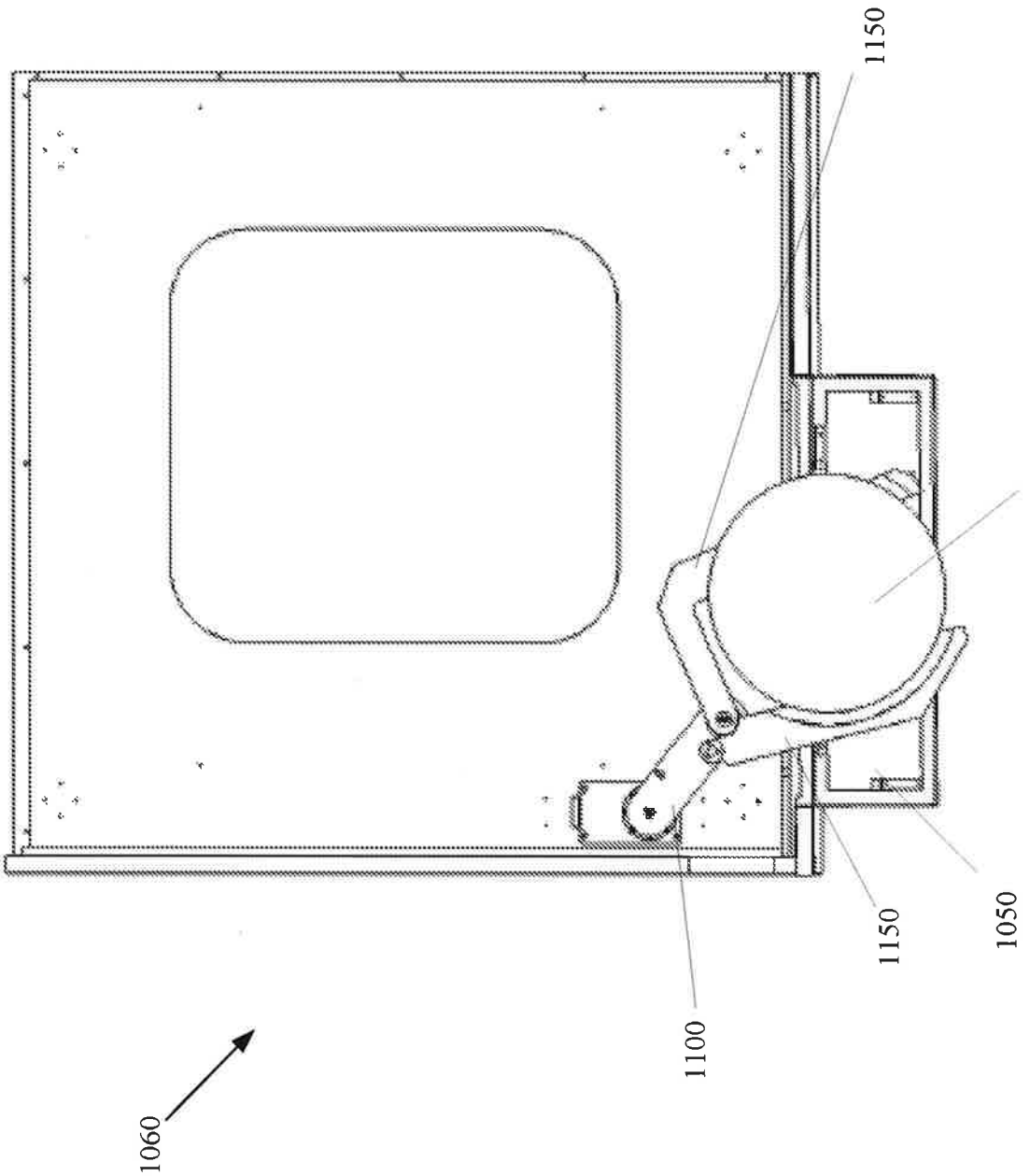

FIG. 6C

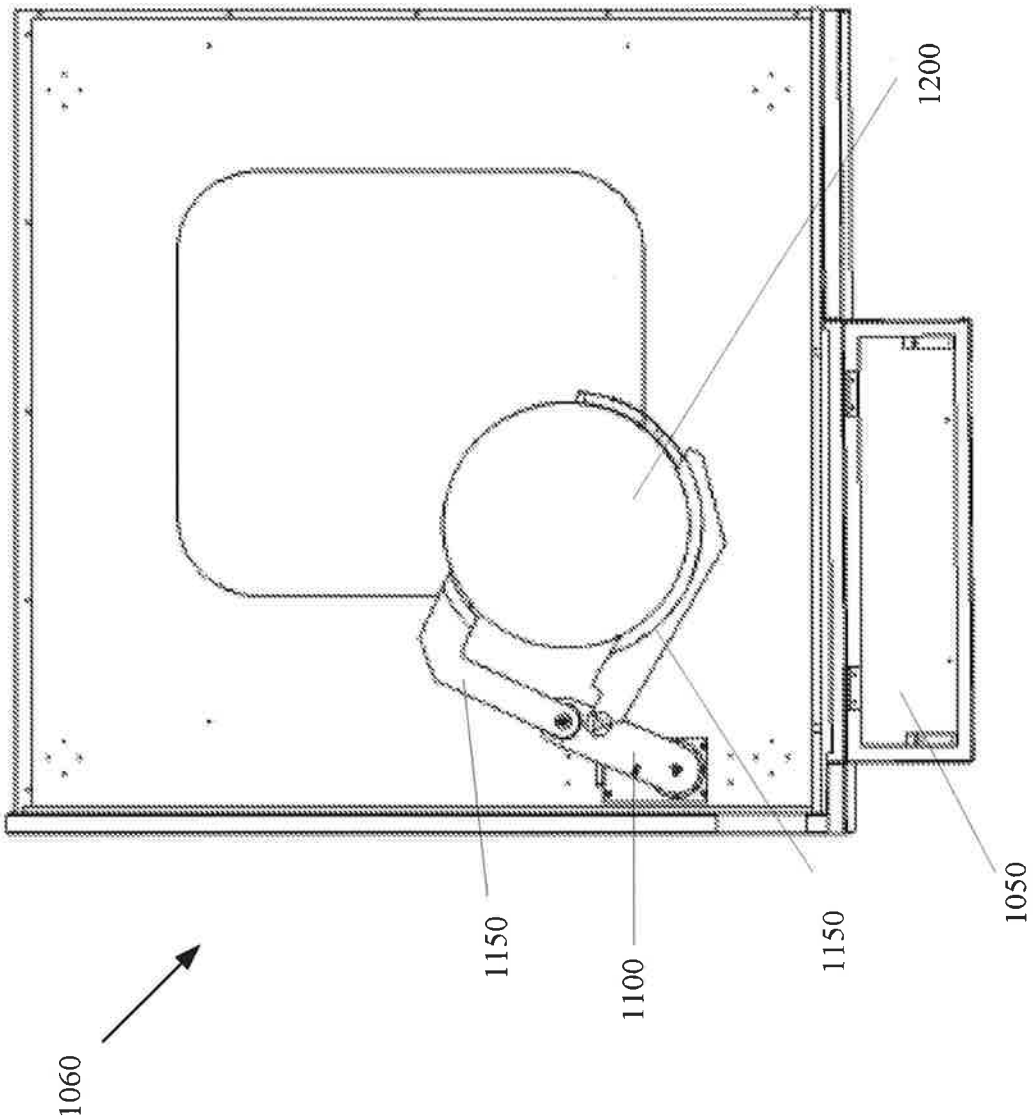

FIG. 6D

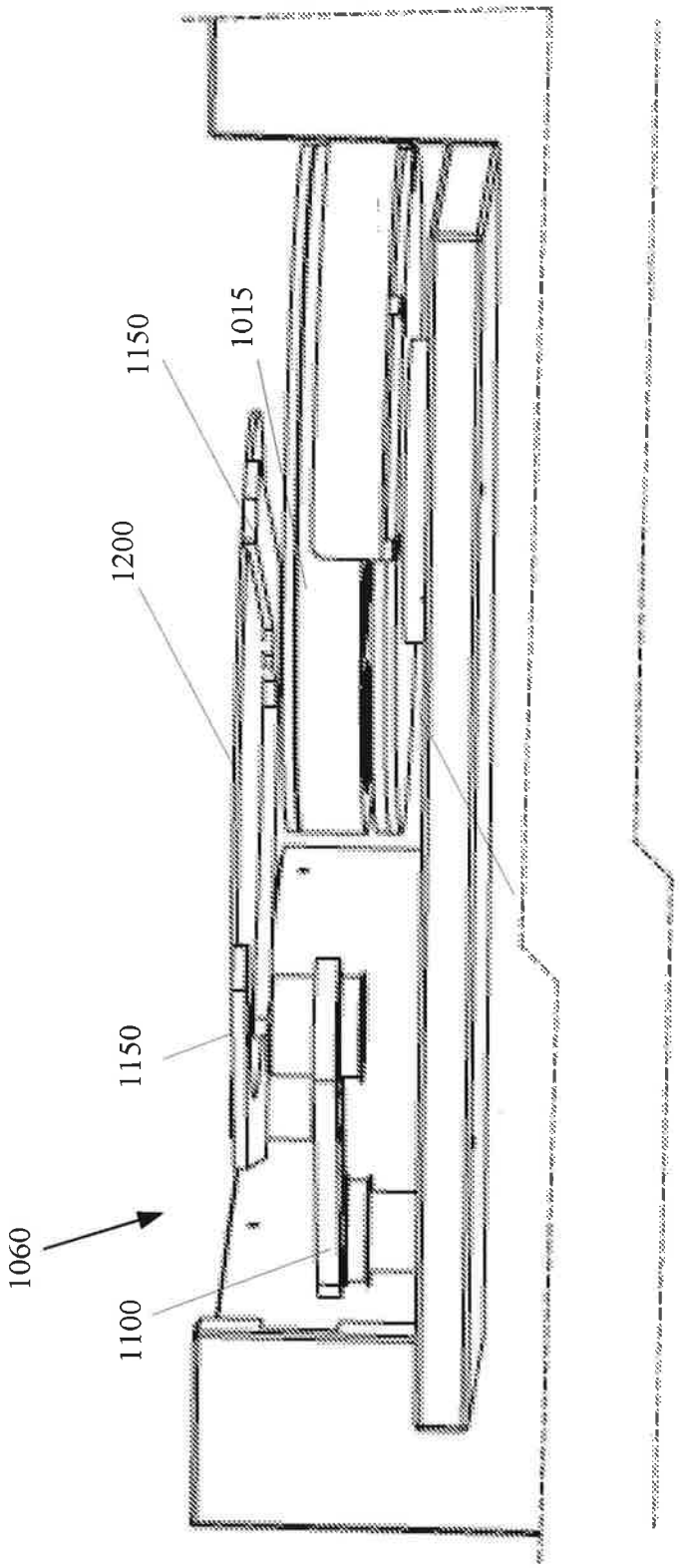

FIG. 6E

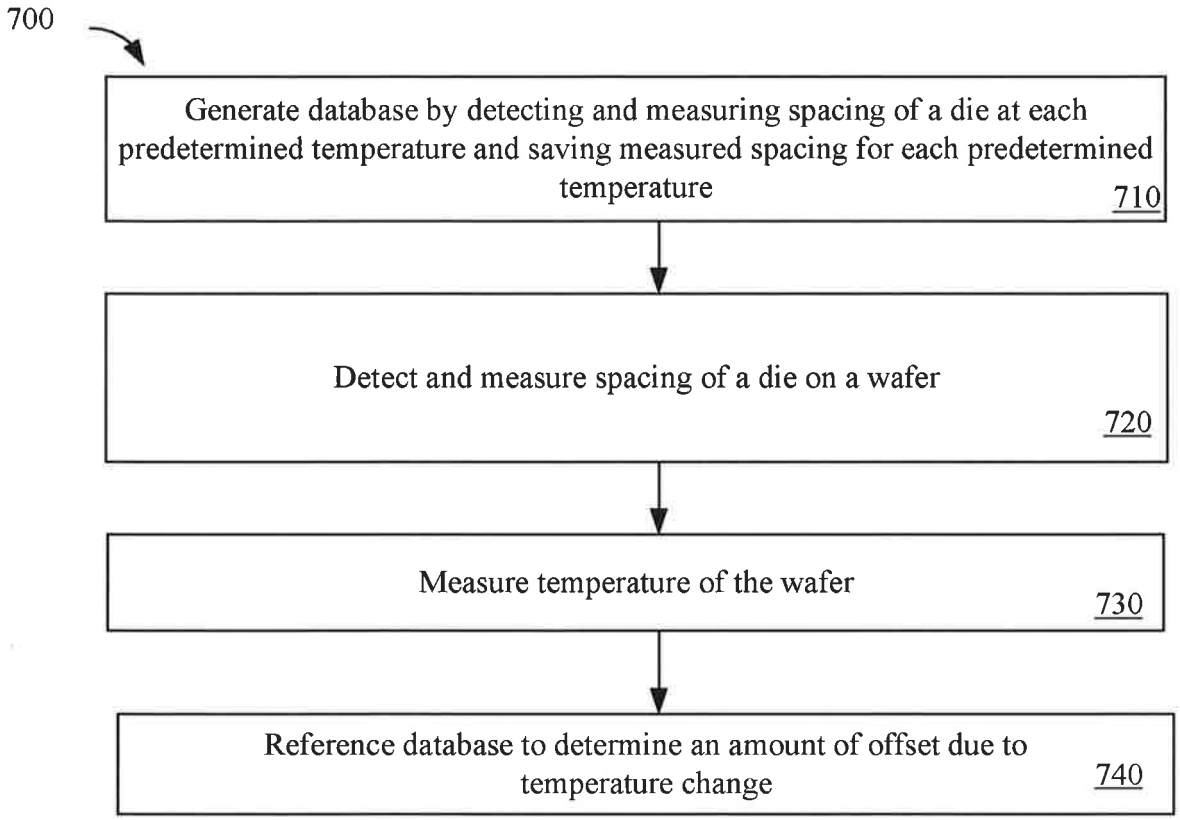
700
Generate database by detecting and measuring spacing of a die at each predetermined temperature and saving measured spacing for each predetermined temperature
710
Detect and measure spacing of a die on a wafer
720
Measure temperature of the wafer
730
Reference database to determine an amount of offset due to temperature change
740

FIG. 7

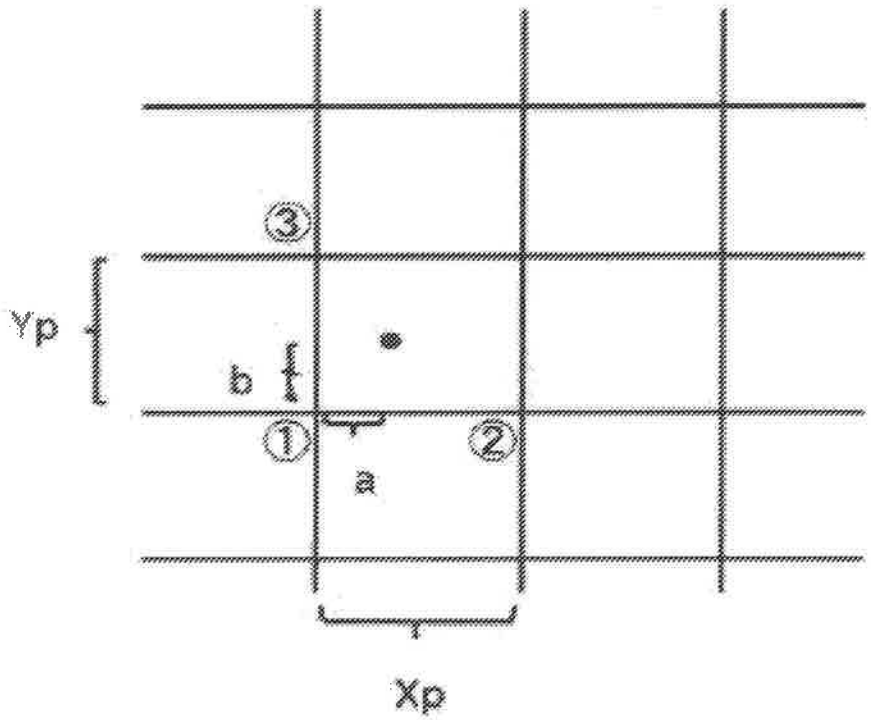

①(SX1,SY1)
②(SX2,SY2)
③(SX3,SY3)

Xp: Mask pitch(X)
Yp: Mask pitch(Y)

If move to ● (X,Y) location,
seeking ● location of ①、②、③ from map data.

Final location (coordinate position with correction) from following formula.

$$X' = SX1 + (SX2 - SX1) \times a \div Xp$$
$$Y' = SY1 + (SY2 - SY1) \times b \div Yp$$

FIG. 8

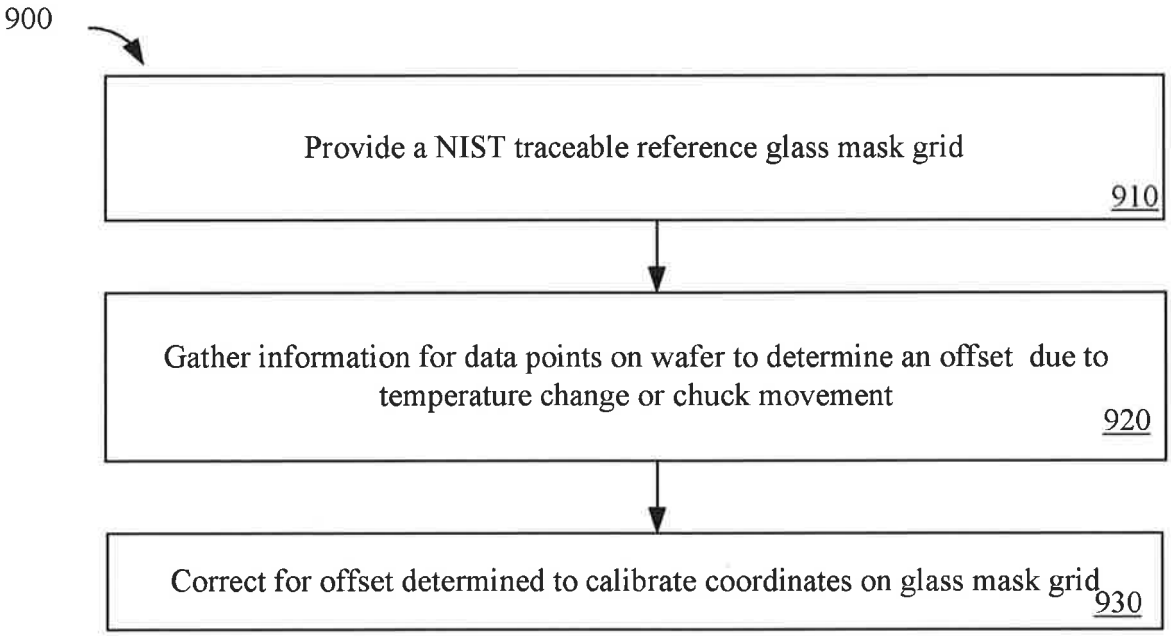
900
Provide a NIST traceable reference glass mask grid
910
Gather information for data points on wafer to determine an offset due to temperature change or chuck movement
920
Correct for offset determined to calibrate coordinates on glass mask grid
930

FIG. 9