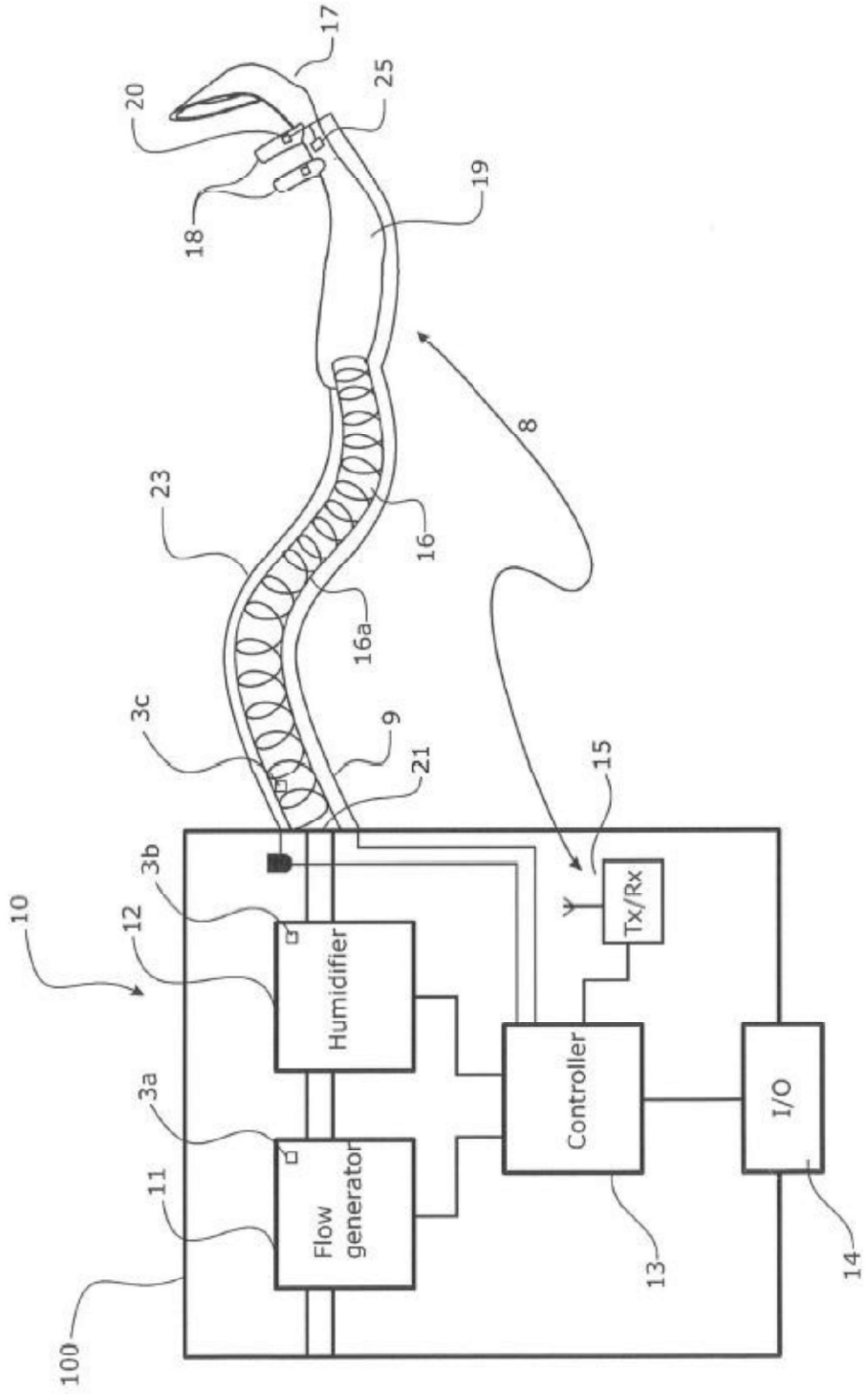
17
25
20
19
18
8
23
16
16a
3c
9
21
15
3b
10
12
Humidifier
Tx/Rx
Controller
I/O
3a
11
Flow generator
13
14
100

FIG. 1A

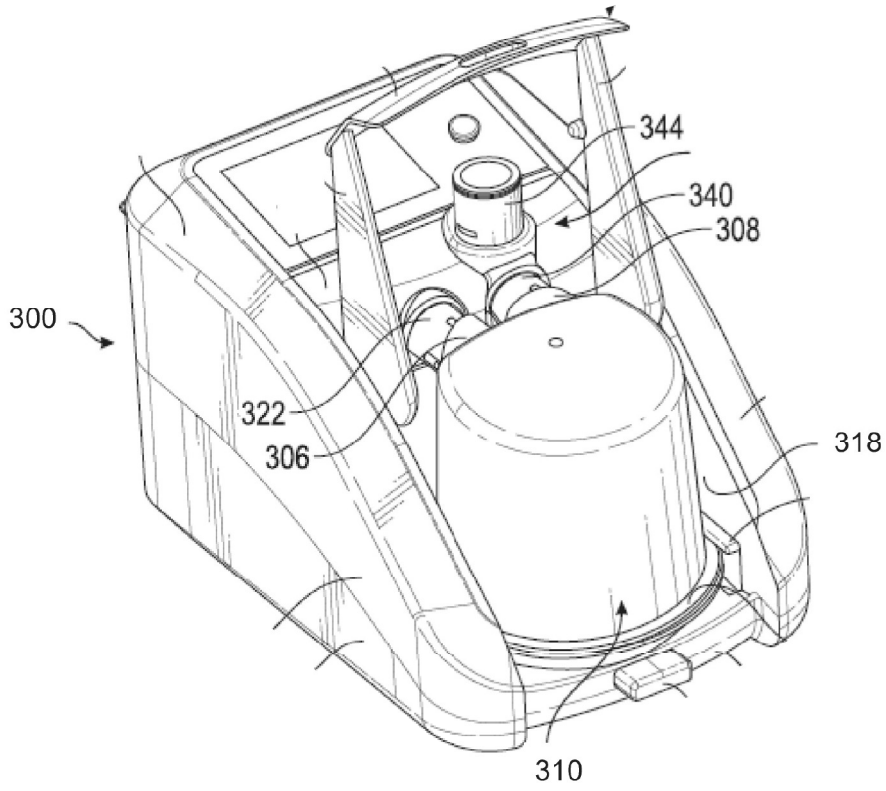

FIG. 1B

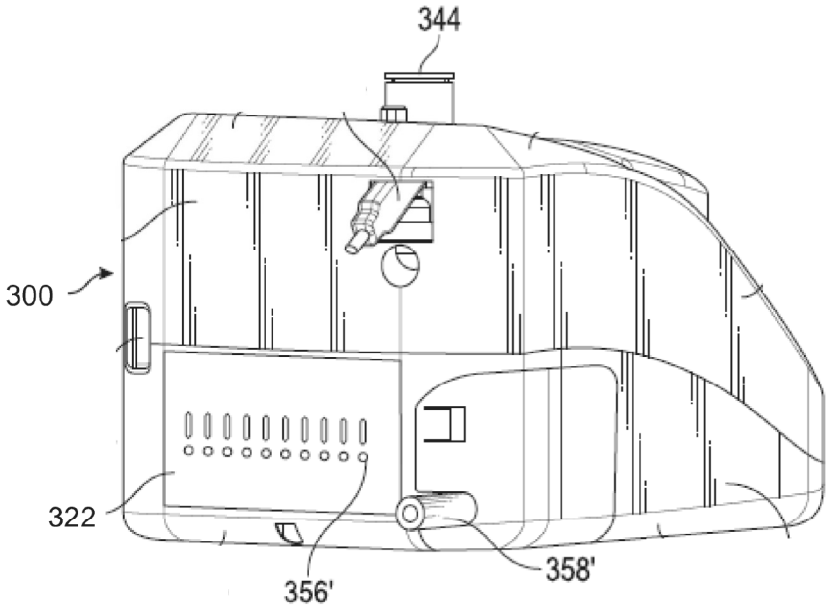

FIG. 1C

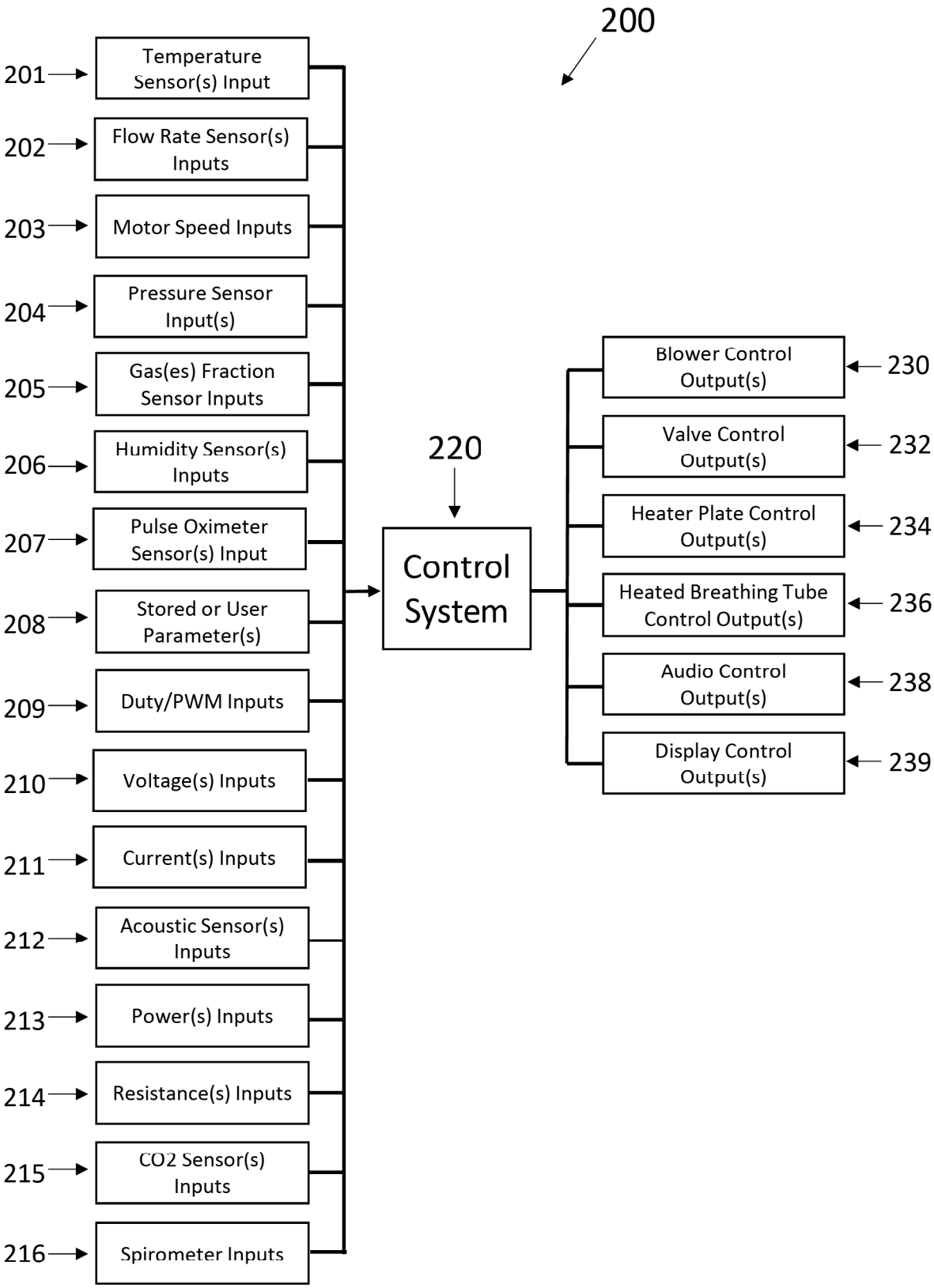
200
201
Temperature Sensor(s) Input
202
Flow Rate Sensor(s) Inputs
203
Motor Speed Inputs
204
Pressure Sensor Input(s)
205
Gas(es) Fraction Sensor Inputs
206
Humidity Sensor(s) Inputs
207
Pulse Oximeter Sensor(s) Input
208
Stored or User Parameter(s)
209
Duty/PWM Inputs
210
Voltage(s) Inputs
211
Current(s) Inputs
212
Acoustic Sensor(s) Inputs
213
Power(s) Inputs
214
Resistance(s) Inputs
215
CO2 Sensor(s) Inputs
216
Spirometer Inputs
220
Control System
Blower Control Output(s)
230
Valve Control Output(s)
232
Heater Plate Control Output(s)
234
Heated Breathing Tube Control Output(s)
236
Audio Control Output(s)
238
Display Control Output(s)
239

FIG. 2A

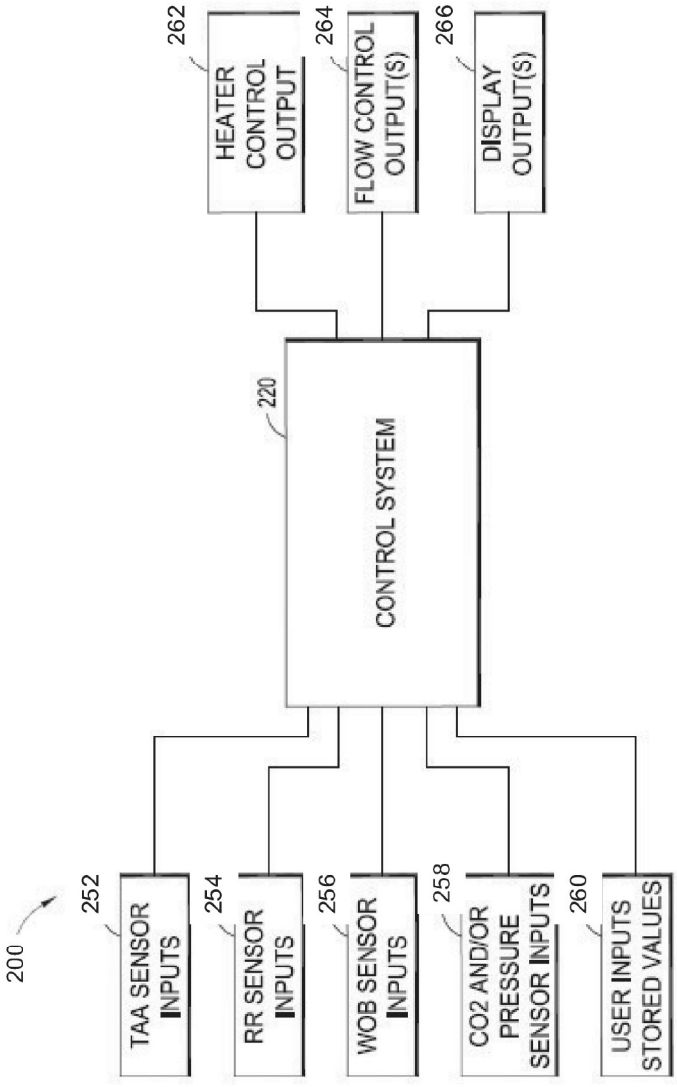
200
252
TAA SENSOR INPUTS
254
RR SENSOR INPUTS
256
WOB SENSOR INPUTS
258
CO2 AND/OR PRESSURE SENSOR INPUTS
260
USER INPUTS STORED VALUES
220
CONTROL SYSTEM
262
HEATER CONTROL OUTPUT
264
FLOW CONTROL OUTPUT(S)
266
DISPLAY OUTPUT(S)

FIG. 2B

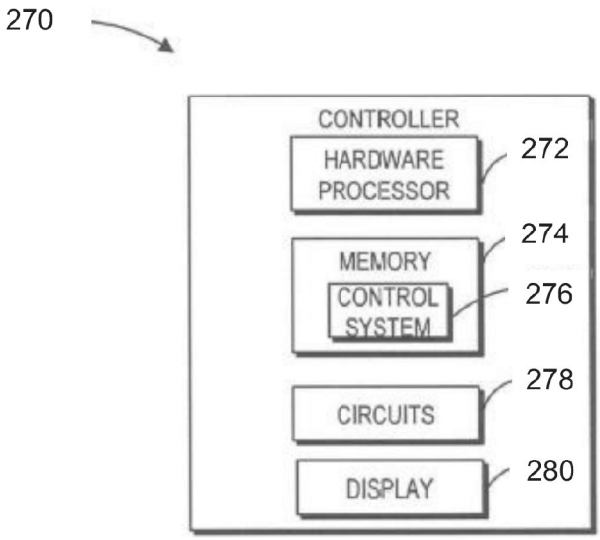
270
CONTROLLER
HARDWARE PROCESSOR
272
MEMORY
274
CONTROL SYSTEM
276
CIRCUITS
278
DISPLAY
280

FIG. 2C

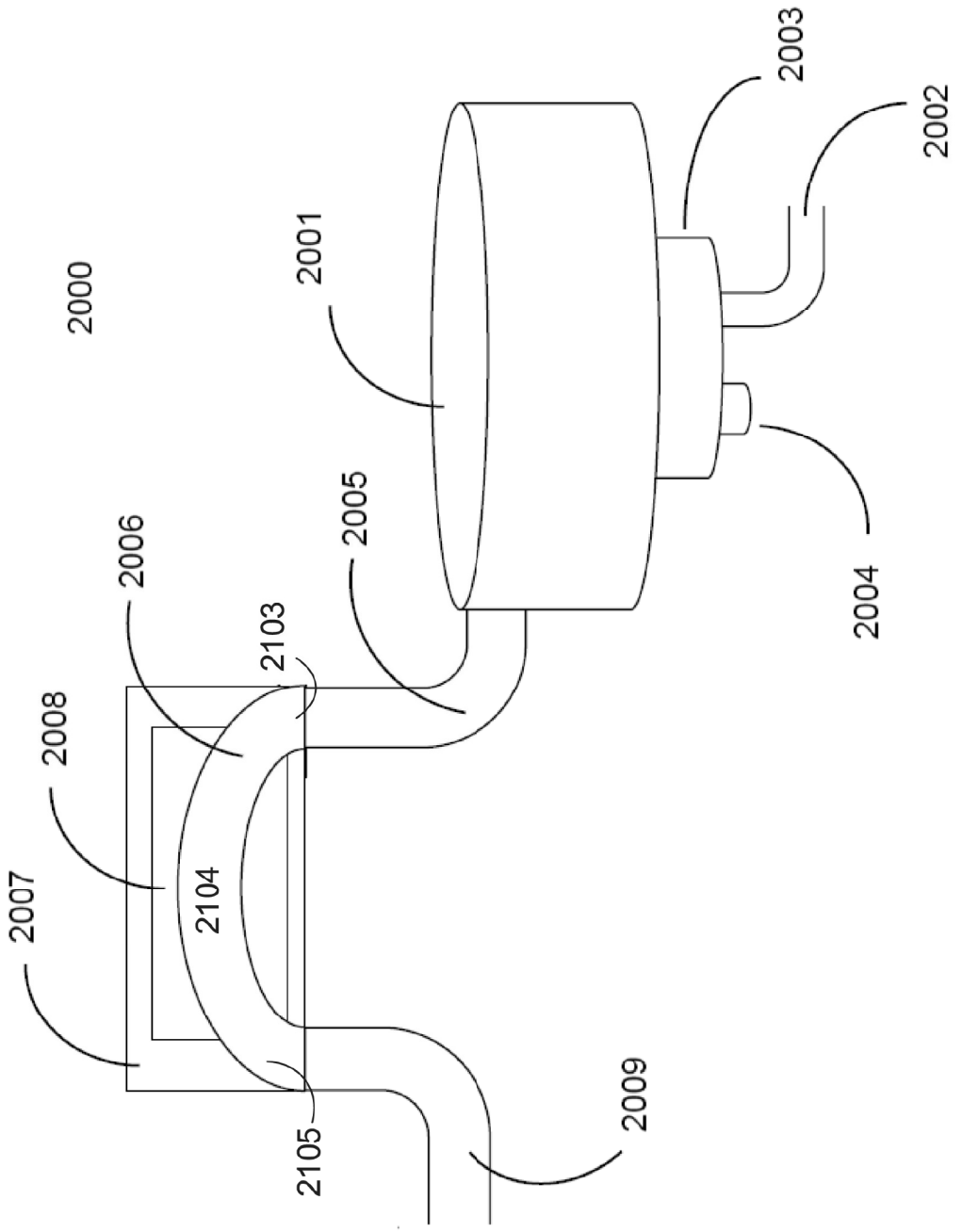
2000
2001
2002
2003
2004
2005
2006
2007
2008
2009
2103
2104
2105

FIG. 3A

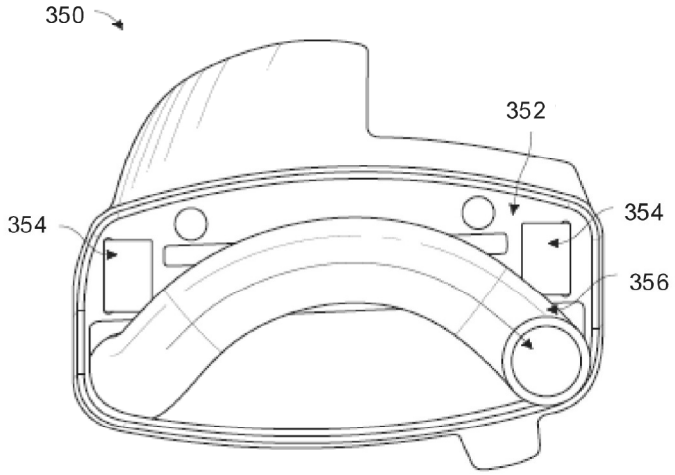

FIG. 3B

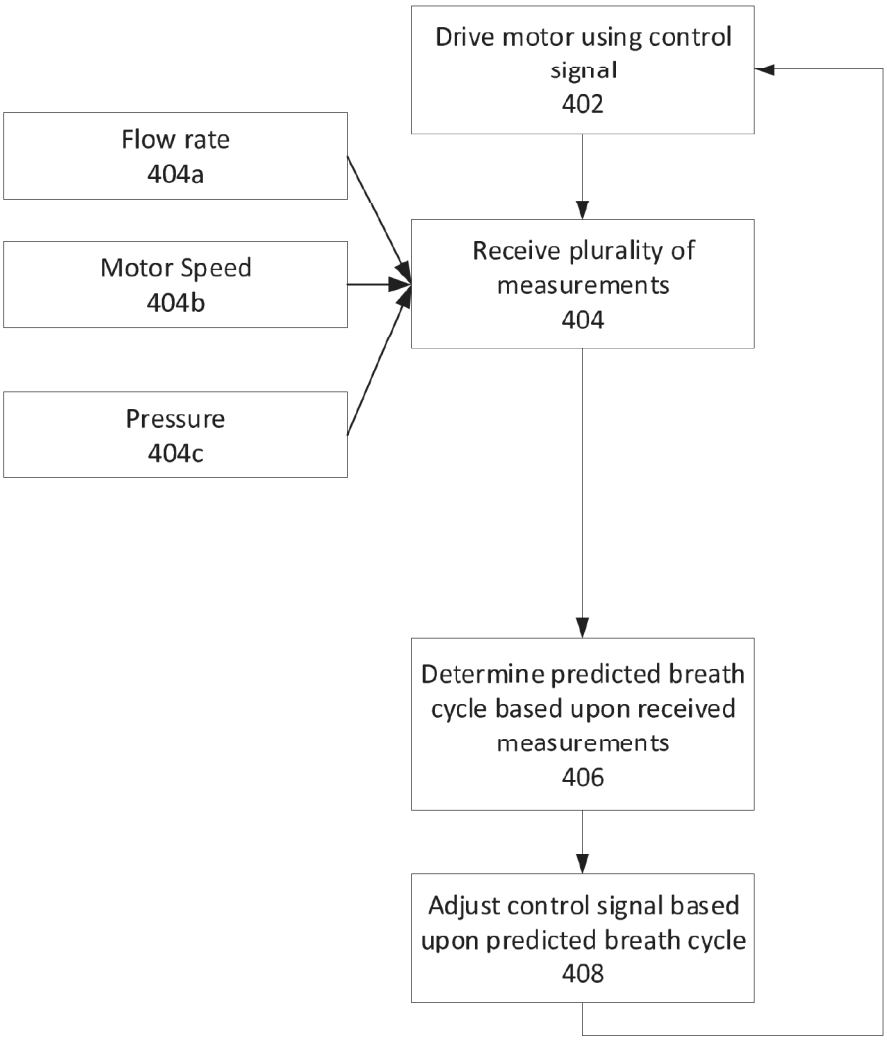
Drive motor using control signal
402
Flow rate
404a
Motor Speed
404b
Pressure
404c
Receive plurality of measurements
404
Determine predicted breath cycle based upon received measurements
406
Adjust control signal based upon predicted breath cycle
408

FIG. 4

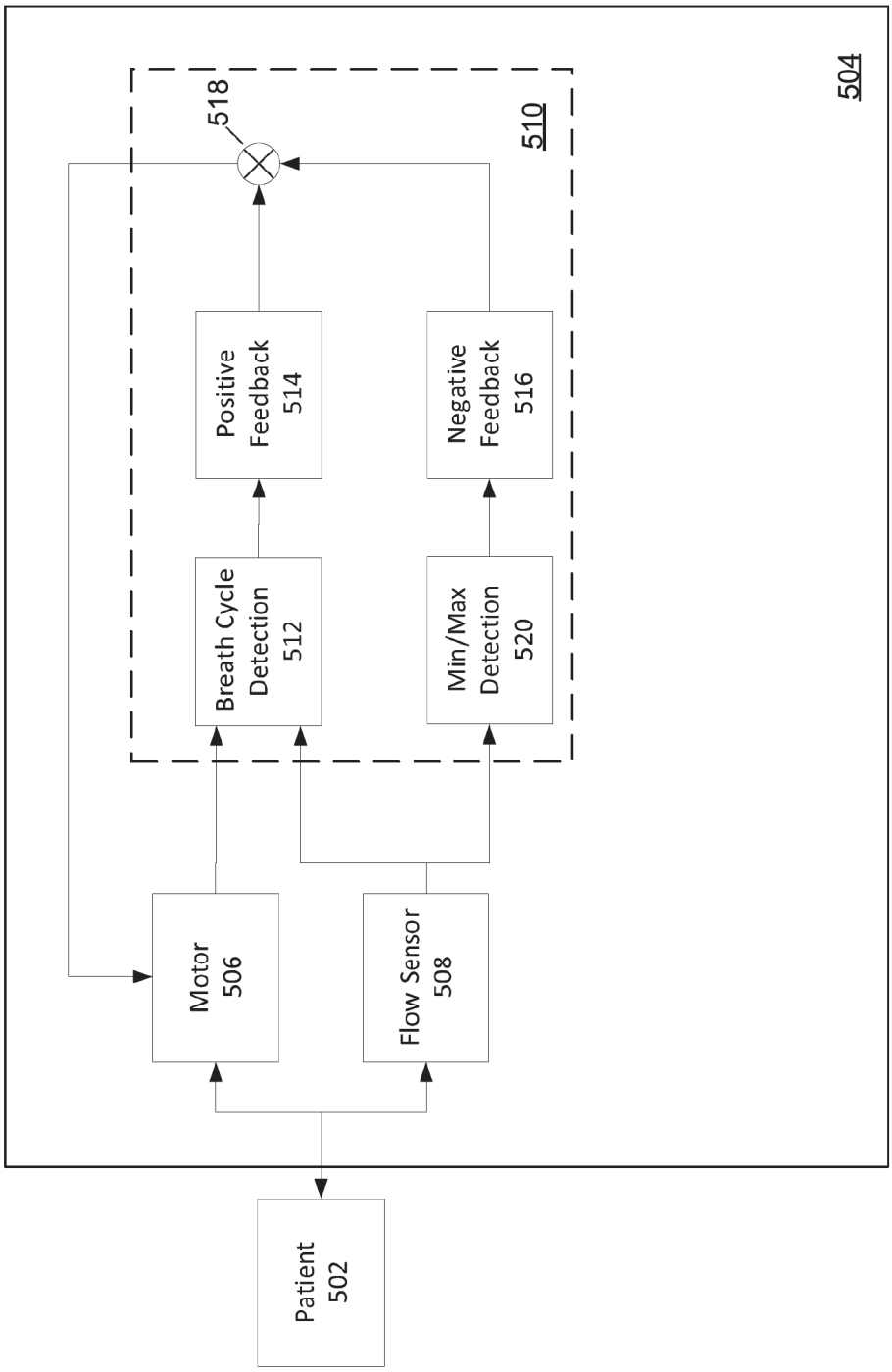
504
518
510
Positive Feedback 514
Negative Feedback 516
Breath Cycle Detection 512
Min/Max Detection 520
Motor 506
Flow Sensor 508
Patient 502

FIG. 5

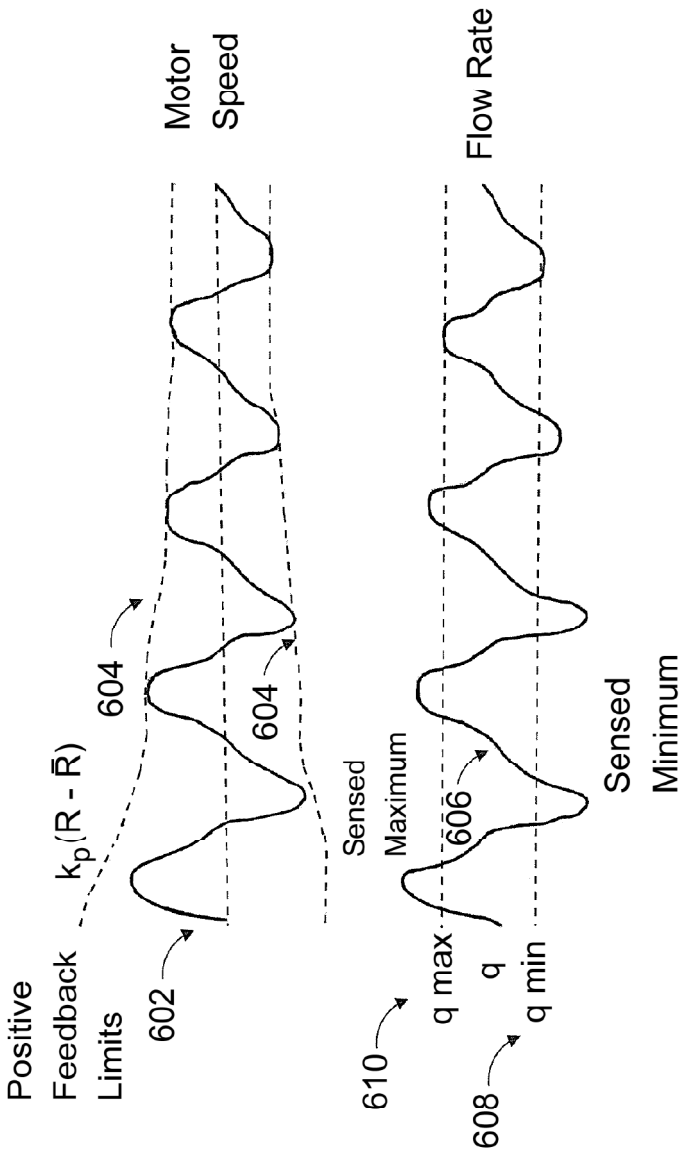
Positive
Feedback
Limits
$k_p(R - \bar{R})$
602
604
604
Motor
Speed
Sensed
Maximum
q max
610
606
q
608
q min
Sensed
Minimum
Flow Rate

FIG. 6

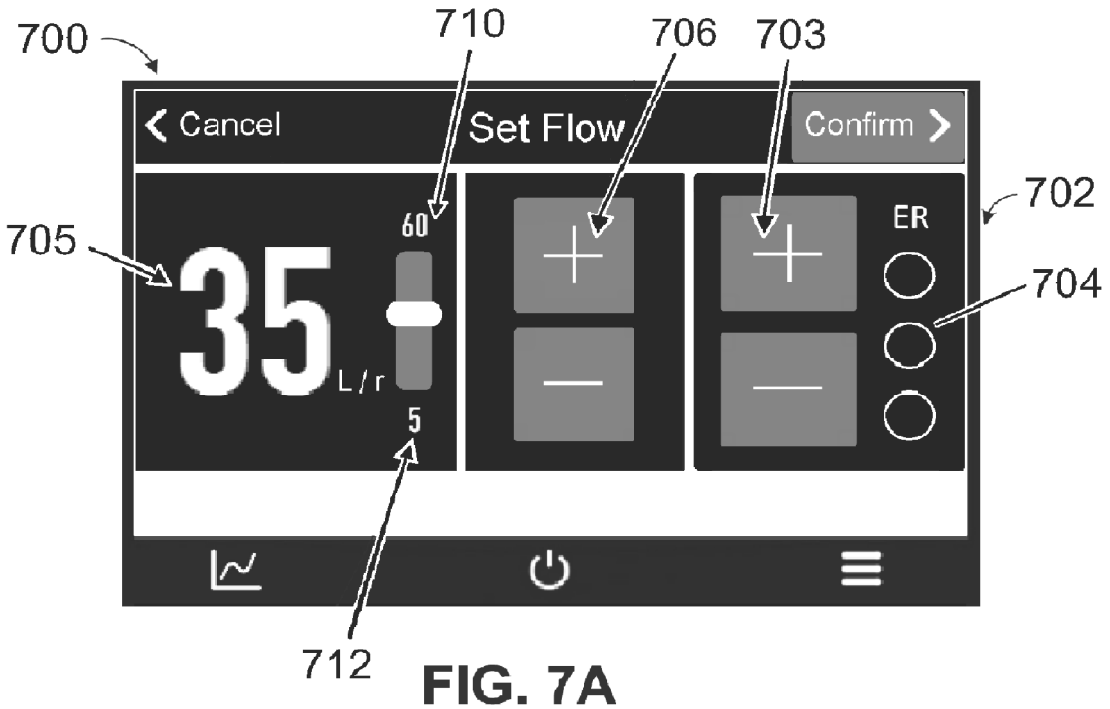
700
710
706
703
Cancel
Set Flow
Confirm
702
705
60
ER
35
L/r
704
5
712

FIG. 7A

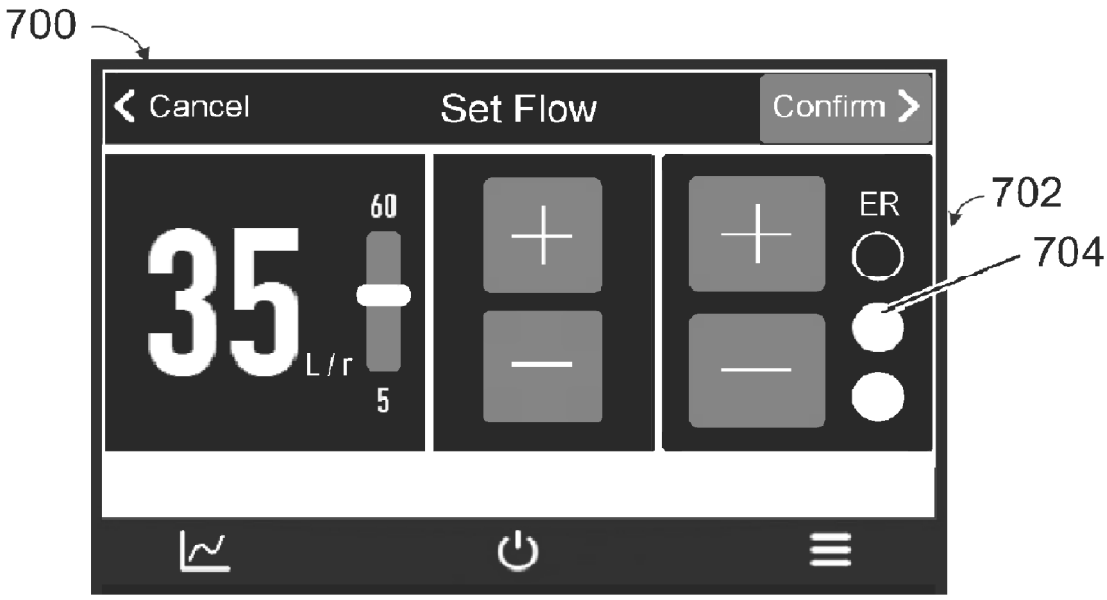
700
Cancel
Set Flow
Confirm
702
60
ER
35
L/r
704
5

FIG. 7B

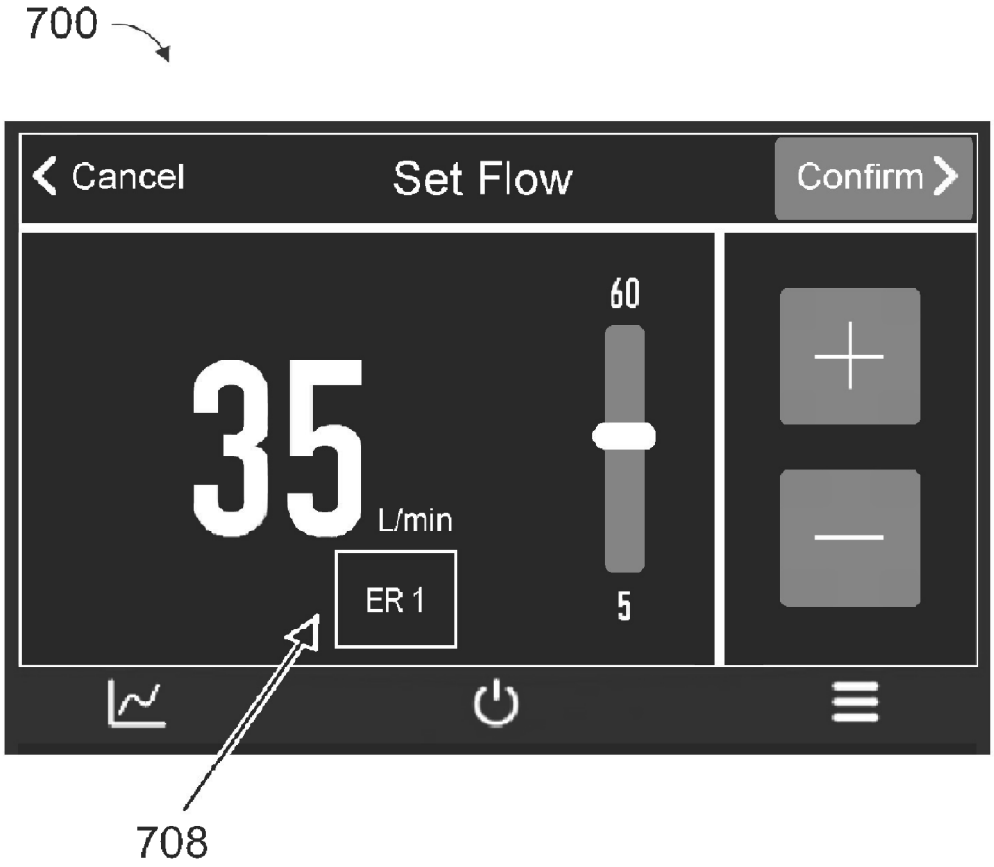

FIG. 7C

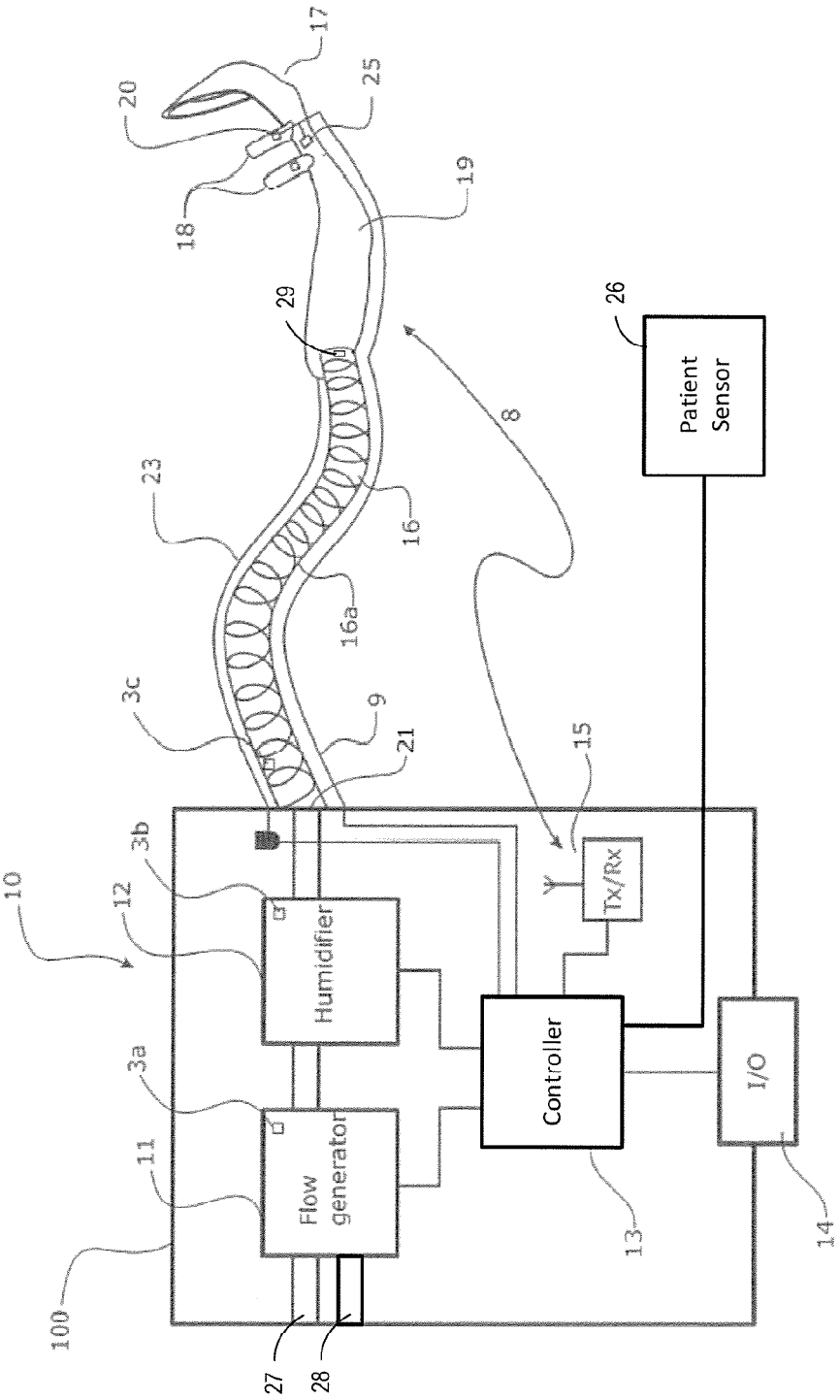
Patient Sensor
Humidifier
Flow generator
Controller
Tx/Rx
I/O
10
11
12
13
14
15
16
16a
17
18
19
20
21
23
25
26
27
28
29
3a
3b
3c
8
9
100

Figure 8

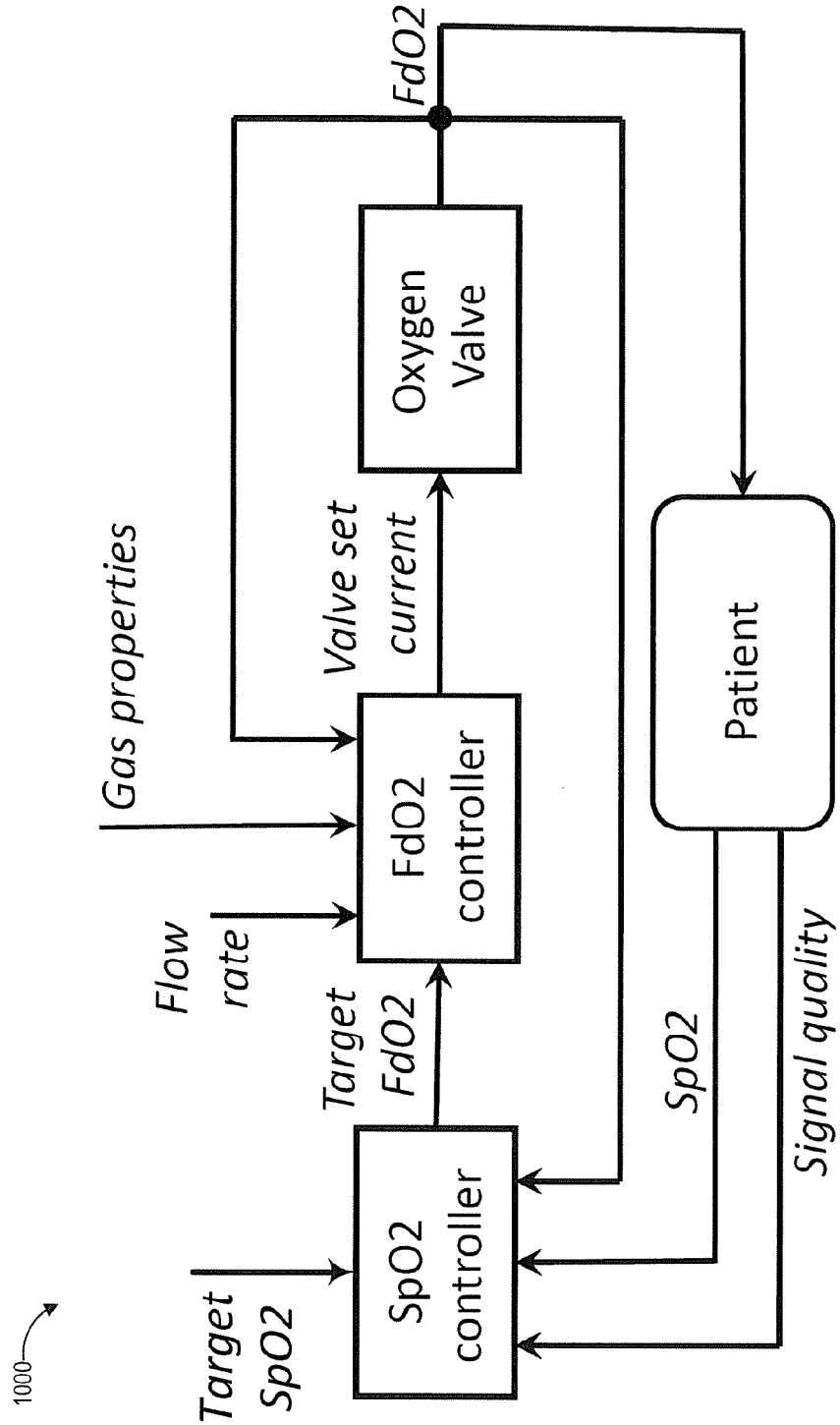
1000
Target SpO2
SpO2 controller
Target FdO2
Flow rate
Gas properties
FdO2 controller
Valve set current
Oxygen Valve
FdO2
SpO2
Signal quality
Patient

Figure 9