(12) INTERNATIONAL APPLICATION PUBLISHED UNDER THE PATENT COOPERATION TREATY (PCT)

(19) World Intellectual Property Organization
International Bureau

(43) International Publication Date
25 November 2004 (25.11.2004)

PCT

(10) International Publication Number
WO 2004/102626 A2

(51) International Patent Classification[7]: H01L

(21) International Application Number:
PCT/US2004/014480

(22) International Filing Date: 7 May 2004 (07.05.2004)

(25) Filing Language: English

(26) Publication Language: English

(30) Priority Data:

60/469,158	9 May 2003 (09.05.2003)	US
10/839,803	5 May 2004 (05.05.2004)	US

(71) Applicant *(for all designated States except US)*: **ENTEGRIS, INC.** [US/US]; 3500 Lyman Boulevard, Chaska, MN 55318 (US).

(72) Inventor; and

(75) Inventor/Applicant *(for US only)*: **ASP, Wayne** [US/US]; 1414 Courtland Road, Waconia, MN 55387 (US).

(74) Agent: **CHRISTENSEN, Douglas, J.**; Patterson, Thuente, Skaar & Christensen, P.A., 4800 IDS Center, 80 South Eighth Street, Minneapolis, MN 55402-2100 (US).

(81) Designated States *(unless otherwise indicated, for every kind of national protection available)*: AE, AG, AL, AM, AT, AU, AZ, BA, BB, BG, BR, BW, BY, BZ, CA, CH, CN, CO, CR, CU, CZ, DE, DK, DM, DZ, EC, EE, EG, ES, FI, GB, GD, GE, GH, GM, HR, HU, ID, IL, IN, IS, JP, KE, KG, KP, KR, KZ, LC, LK, LR, LS, LT, LU, LV, MA, MD, MG, MK, MN, MW, MX, MZ, NA, NI, NO, NZ, OM, PG, PH, PL, PT, RO, RU, SC, SD, SE, SG, SK, SL, SY, TJ, TM, TN, TR, TT, TZ, UA, UG, US, UZ, VC, VN, YU, ZA, ZM, ZW.

(84) Designated States *(unless otherwise indicated, for every kind of regional protection available)*: ARIPO (BW, GH, GM, KE, LS, MW, MZ, NA, SD, SL, SZ, TZ, UG, ZM, ZW), Eurasian (AM, AZ, BY, KG, KZ, MD, RU, TJ, TM), European (AT, BE, BG, CH, CY, CZ, DE, DK, EE, ES, FI,

[Continued on next page]

(54) Title: COMPONENT HANDLING DEVICE HAVING A FILM INSERT MOLDED RFID TAG

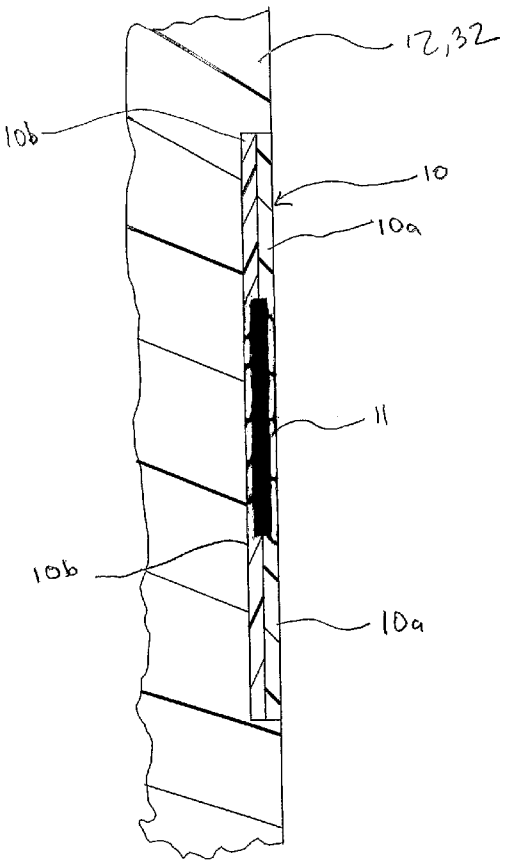

(57) Abstract: A system and method for including a thin and flexible RFID tag in the molding process for handlers, transporters, carriers, trays and like handling devices utilized in the semiconductor and sensitive electronic component processing and handling industries. The RFID tag of predetermined size and shape is generally bonded or encapsulated between two thermopolymer film layers to create an RFID tag laminate. This RFID tag laminate is selectively placed along a shaping surface in a mold cavity for alignment with a desired target surface of a moldable molten resin material such that upon completion of the film insert molding process, the RFID tag laminate is integrally bonded to at least a portion of the molded handling device, or handling device component/part.

WO 2004/102626 A2

FR, GB, GR, HU, IE, IT, LU, MC, NL, PL, PT, RO, SE, SI, SK, TR), OAPI (BF, BJ, CF, CG, CI, CM, GA, GN, GQ, GW, ML, MR, NE, SN, TD, TG).

Published:

— *without international search report and to be republished upon receipt of that report*

For two-letter codes and other abbreviations, refer to the "Guidance Notes on Codes and Abbreviations" appearing at the beginning of each regular issue of the PCT Gazette.