(12) INTERNATIONAL APPLICATION PUBLISHED UNDER THE PATENT COOPERATION TREATY (PCT)

(19) World Intellectual Property Organization
International Bureau

(43) International Publication Date
30 September 2010 (30.09.2010)

PCT

(10) International Publication Number
WO 2010/110740 A1

(51) International Patent Classification:
C12M 1/34 (2006.01)

(21) International Application Number:
PCT/SG2009/000453

(22) International Filing Date:
26 November 2009 (26.11.2009)

(25) Filing Language: English

(26) Publication Language: English

(30) Priority Data:
200902057-9 25 March 2009 (25.03.2009) SG

(72) Inventor; and
(71) Applicant : **GONG, Haiqing** [SG/SG]; 53-04-1026, 20 Nanyang Avenue, Hall of Residence 11, Singapore 639809 (SG).

(74) Agent: **CALLINAN, Keith William**; Marks & Clerk Singapore LLP, Tanjong Pagar, P O Box 636, Singapore 910816 (SG).

(81) Designated States *(unless otherwise indicated, for every kind of national protection available)*: AE, AG, AL, AM, AO, AT, AU, AZ, BA, BB, BG, BH, BR, BW, BY, BZ, CA, CH, CL, CN, CO, CR, CU, CZ, DE, DK, DM, DO, DZ, EC, EE, EG, ES, FI, GB, GD, GE, GH, GM, GT, HN, HR, HU, ID, IL, IN, IS, JP, KE, KG, KM, KN, KP, KR, KZ, LA, LC, LK, LR, LS, LT, LU, LY, MA, MD, ME, MG, MK, MN, MW, MX, MY, MZ, NA, NG, NI, NO, NZ, OM, PE, PG, PH, PL, PT, RO, RS, RU, SC, SD, SE, SG, SK, SL, SM, ST, SV, SY, TJ, TM, TN, TR, TT, TZ, UA, UG, US, UZ, VC, VN, ZA, ZM, ZW.

(84) Designated States *(unless otherwise indicated, for every kind of regional protection available)*: ARIPO (BW, GH, GM, KE, LS, MW, MZ, NA, SD, SL, SZ, TZ, UG, ZM, ZW), Eurasian (AM, AZ, BY, KG, KZ, MD, RU, TJ, TM), European (AT, BE, BG, CH, CY, CZ, DE, DK, EE, ES, FI, FR, GB, GR, HR, HU, IE, IS, IT, LT, LU, LV, MC, MK, MT, NL, NO, PL, PT, RO, SE, SI, SK, SM, TR), OAPI (BF, BJ, CF, CG, CI, CM, GA, GN, GQ, GW, ML, MR, NE, SN, TD, TG).

Declarations under Rule 4.17:

— *of inventorship (Rule 4.17(iv))*

Published:

— *with international search report (Art. 21(3))*

WO 2010/110740 A1

(54) Title: A FLUIDIC APPARATUS AND/OR METHOD FOR DIFFERENTIATING VIABLE CELLS

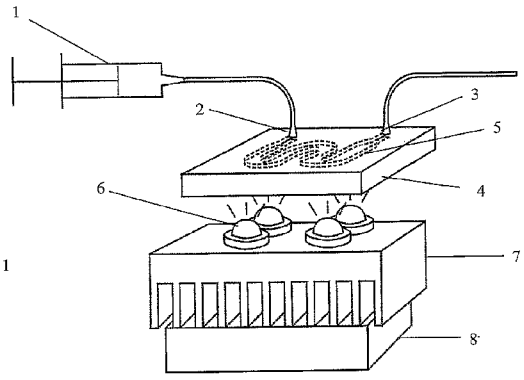

Figure 1

(57) Abstract: The present invention relates to a fluidic apparatus for a reaction for differentiating viable cells. The fluidic apparatus comprises a cartridge comprising a substantially optically transparent reaction chamber configured to expose to a light source a sample comprising cells and a phenanthridium compound capable of preferentially penetrating dead or membrane-compromised cells over viable and/or substantially intact cells to intercalate with at least one nucleic acid molecule and covalently binding to the nucleic acid molecule on exposure to a light source, at least one inlet in fluid communication with the reaction chamber; and at least one outlet in fluid communication with the reaction chamber; and at least one light source configured to transmit light to the reaction chamber. The fluidic apparatus may be automated. The invention also relates to a method for differentiating viable cells and membrane-compromised cells with the fluidic apparatus.