(12) INTERNATIONAL APPLICATION PUBLISHED UNDER THE PATENT COOPERATION TREATY (PCT)

(19) World Intellectual Property Organization
International Bureau

(43) International Publication Date
15 February 2001 (15.02.2001)

PCT

(10) International Publication Number
WO 01/10697 A1

(51) International Patent Classification[7]: B61B 13/00

(21) International Application Number: PCT/AU00/00898

(22) International Filing Date: 28 July 2000 (28.07.2000)

(25) Filing Language: English

(26) Publication Language: English

(30) Priority Data:
PQ 2103 10 August 1999 (10.08.1999) AU
PQ 4352 1 December 1999 (01.12.1999) AU

(71) Applicant *(for all designated States except US)*: **BISHOP AUSTRANS LIMITED** [AU/AU]; 10 Waterloo Road, North Ryde, NSW 2113 (AU).

(72) Inventor; and

(75) Inventor/Applicant *(for US only)*: **TAYLOR, Scott, Phillip, Neale** [AU/AU]; 45 Avonlea Drive, Carlingford, NSW 2118 (AU).

(81) Designated States *(national)*: AE, AG, AL, AM, AT, AU, AZ, BA, BB, BG, BR, BY, BZ, CA, CH, CN, CR, CU, CZ, DE, DK, DM, DZ, EE, ES, FI, GB, GD, GE, GH, GM, HR, HU, ID, IL, IN, IS, JP, KE, KG, KP, KR, KZ, LC, LK, LR, LS, LT, LU, LV, MA, MD, MG, MK, MN, MW, MX, MZ, NO, NZ, PL, PT, RO, RU, SD, SE, SG, SI, SK, SL, TJ, TM, TR, TT, TZ, UA, UG, US, UZ, VN, YU, ZA, ZW.

(84) Designated States *(regional)*: ARIPO patent (GH, GM, KE, LS, MW, MZ, SD, SL, SZ, TZ, UG, ZW), Eurasian patent (AM, AZ, BY, KG, KZ, MD, RU, TJ, TM), European patent (AT, BE, CH, CY, DE, DK, ES, FI, FR, GB, GR, IE, IT, LU, MC, NL, PT, SE), OAPI patent (BF, BJ, CF, CG, CI, CM, GA, GN, GW, ML, MR, NE, SN, TD, TG).

Published:
— *With international search report.*

For two-letter codes and other abbreviations, refer to the "Guidance Notes on Codes and Abbreviations" appearing at the beginning of each regular issue of the PCT Gazette.

(54) Title: A VEHICLE WITH A STEERABLE WHEELSET

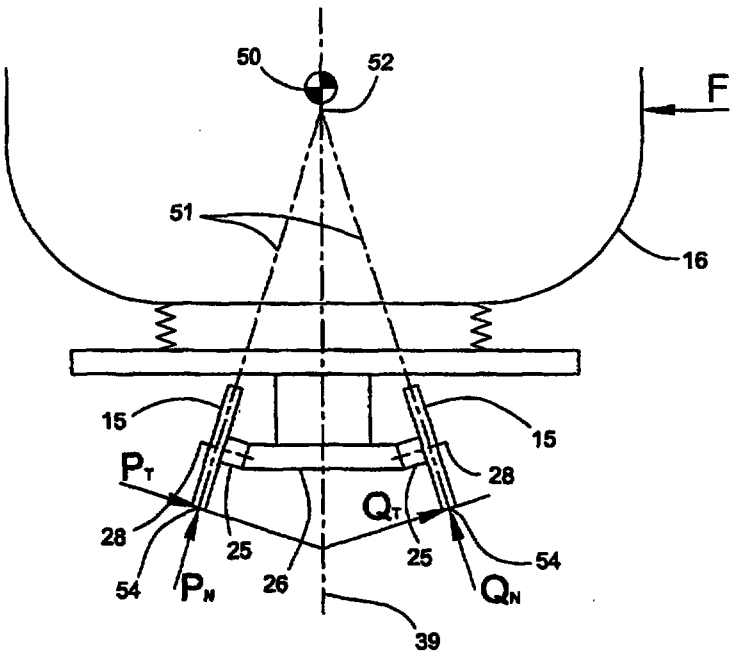

(57) Abstract: A vehicle where respective inwardly inclined wheels (15) of a steerable wheelset run on respective inwardly sloping faces (54) of a guideway having centreline (39). The vehicle having sensing means for sensing lateral displacement of the wheelset relative to a longitudinal reference path. The sensing means signalling a control system including actuating means to steer the wheelset in response to sensed lateral displacement thereof.

WO 01/10697 A1