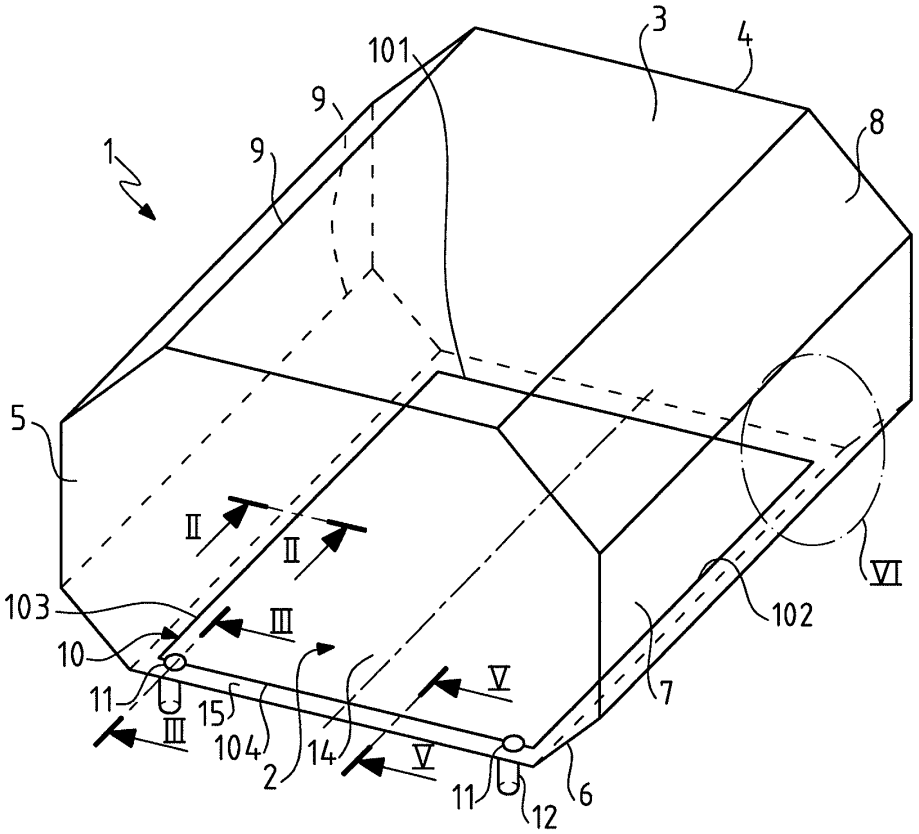
1
101
3
4
9
9
8
5
II
II
103
III
10
11
III
15
104
2
14
V
V
7
102
VI
11
12
6

FIG.1

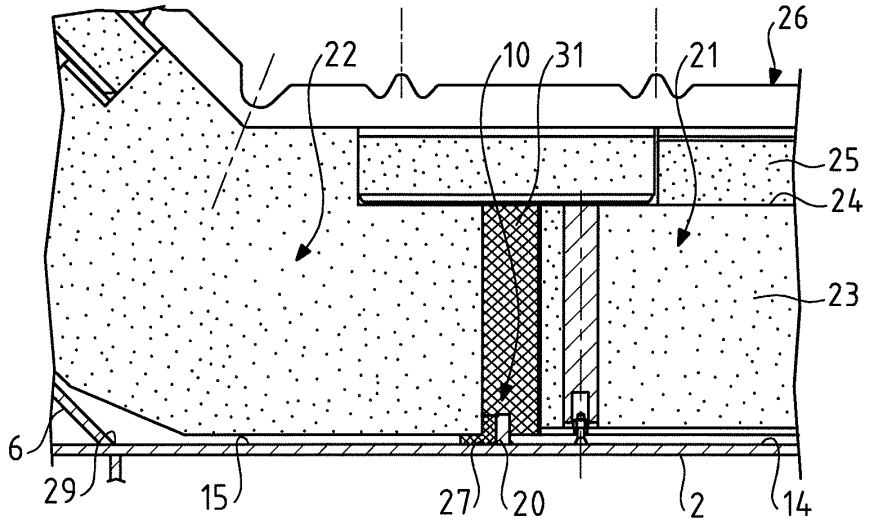
26
22
10
31
21
25
24
23
6
II
29
15
27
20
2
14

FIG.2

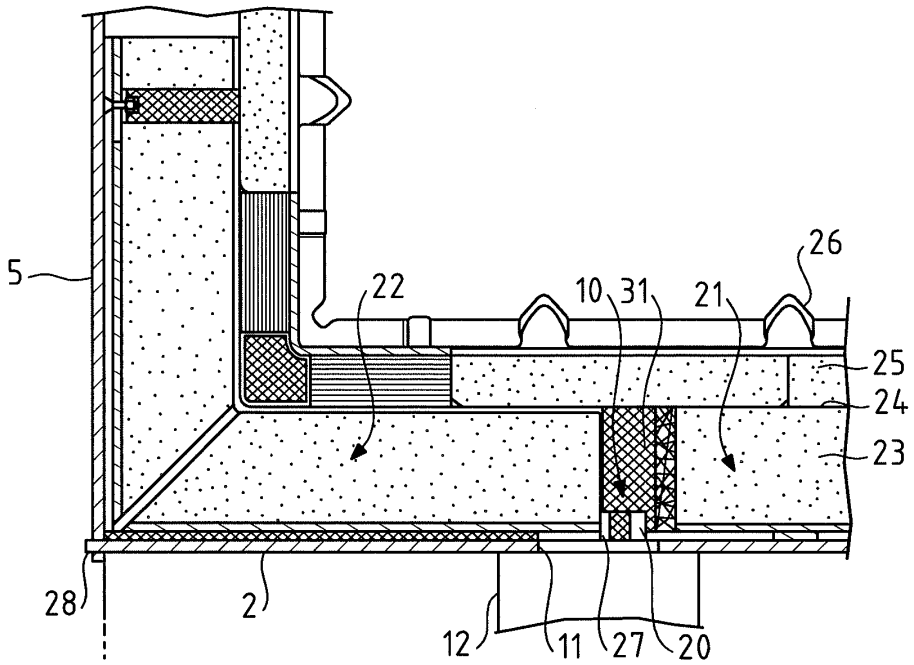
5
22
10
31
21
26
25
24
23
28
2
12
11
27
20

FIG.3

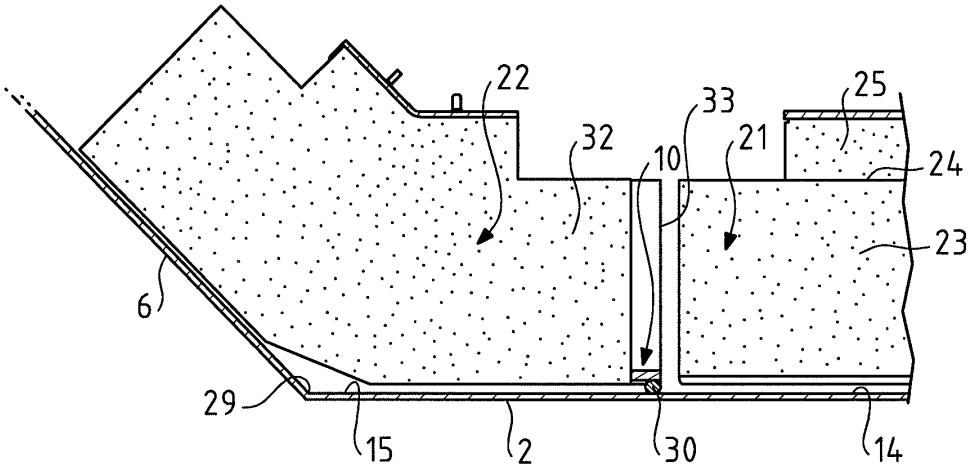
22
33
25
32
10
21
24
23
6
29
15
2
30
14

FIG.4

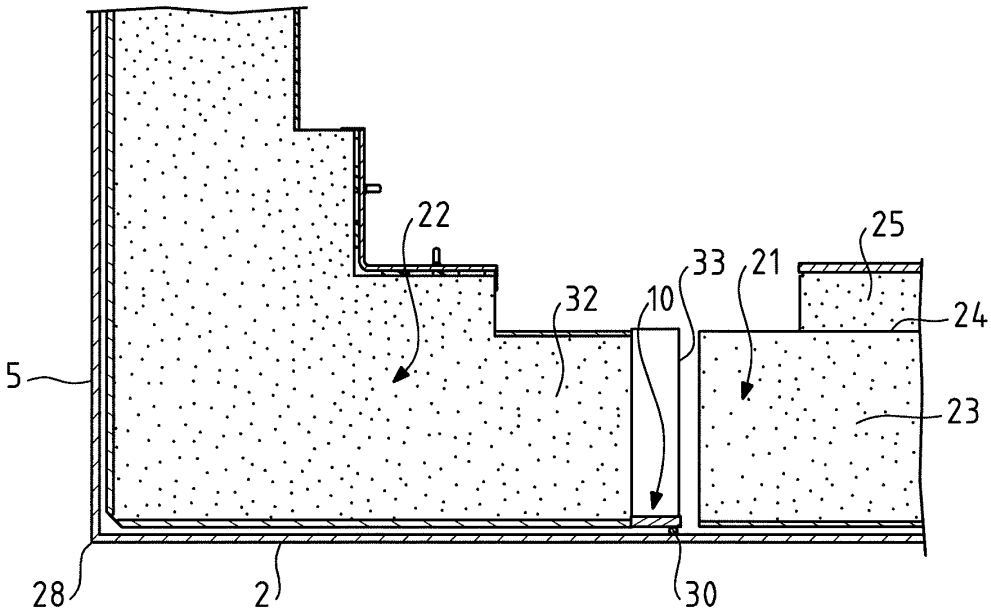
22
25
33
21
32
10
24
5
23
28
2
30

FIG.5

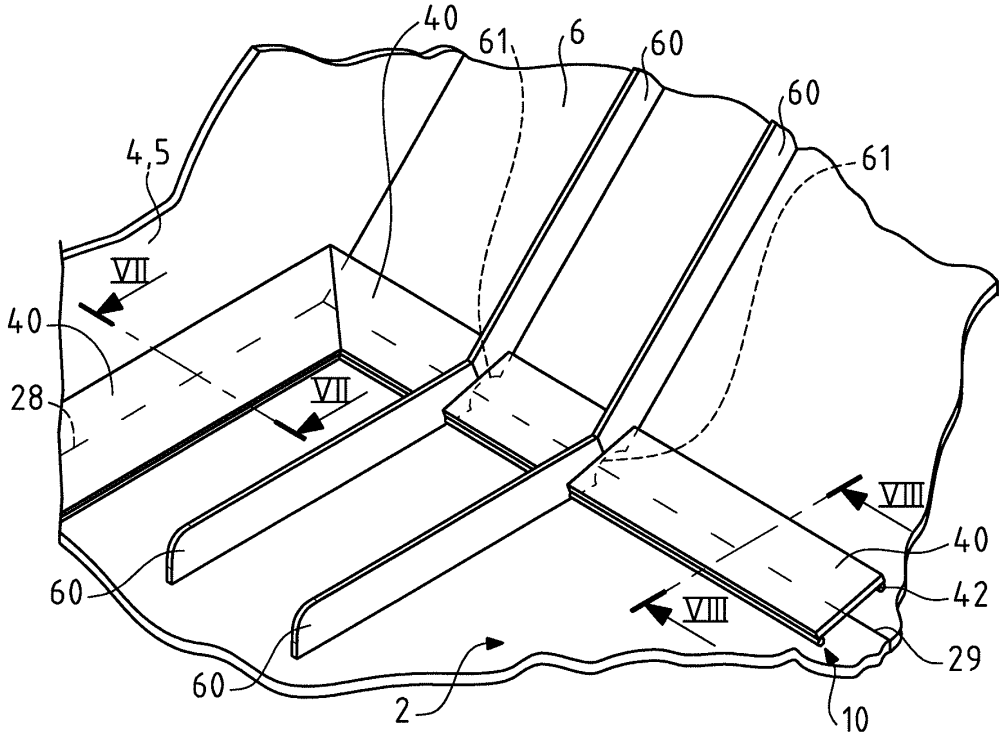
40
61
6
60
60
61
4,5
VII
40
28
VII
VIII
40
42
60
VIII
29
60
2
10

FIG.6

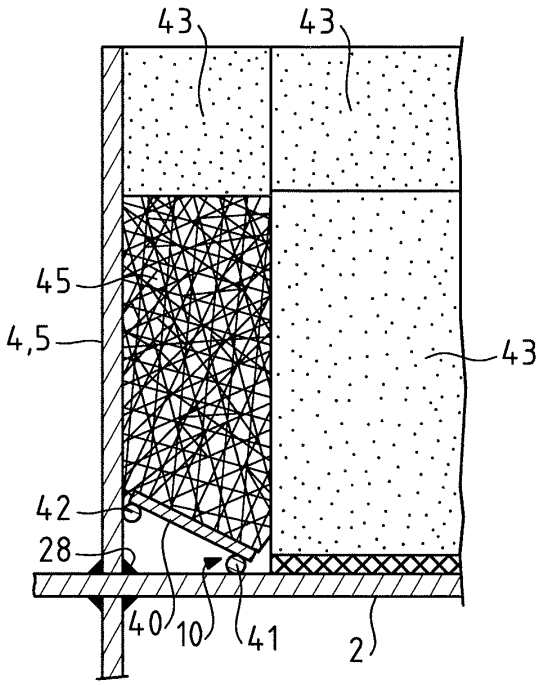

FIG.7

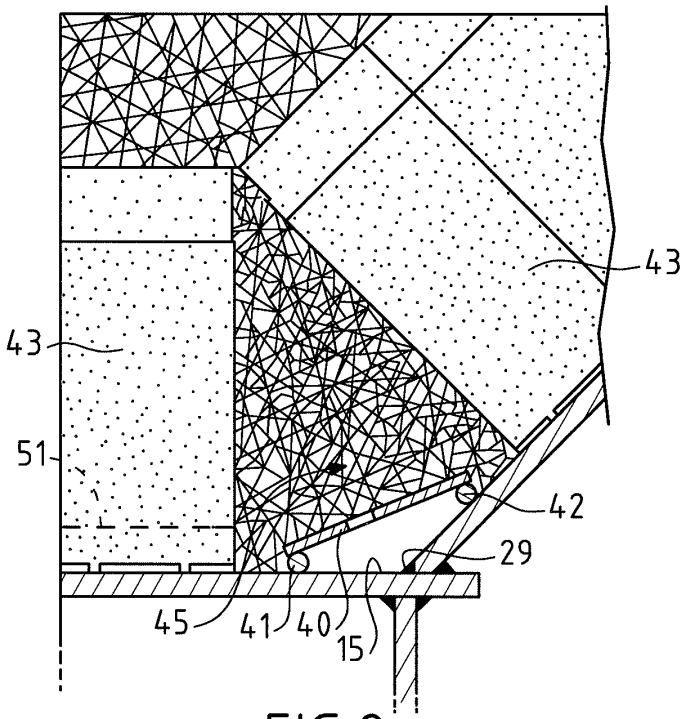

FIG.8

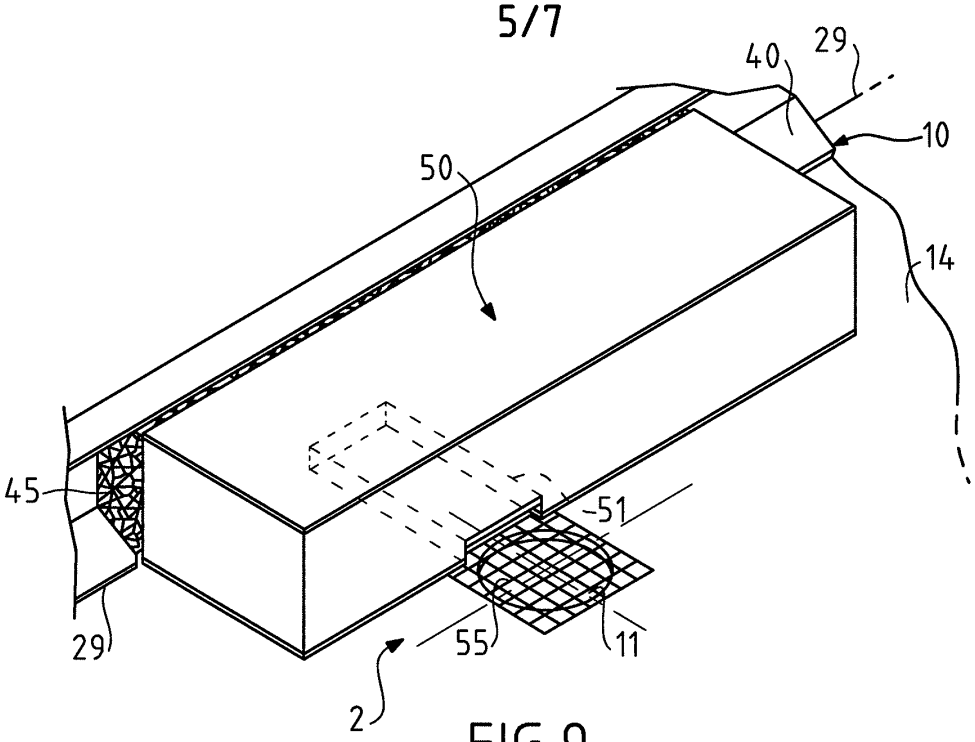

FIG.9

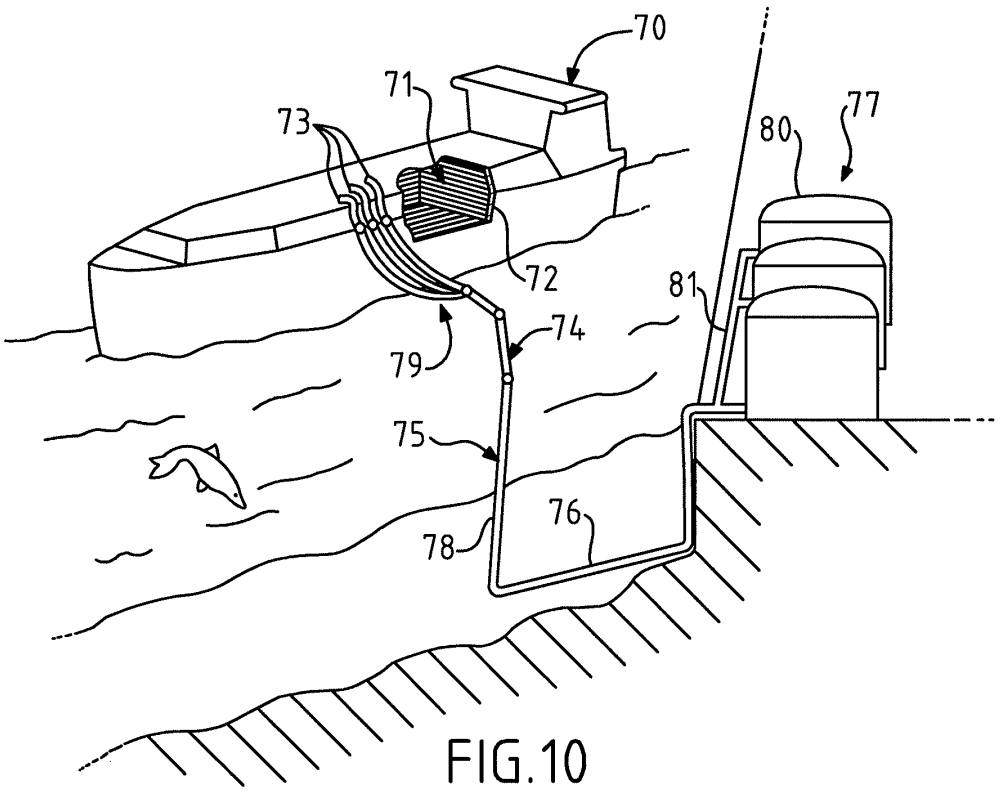

FIG.10

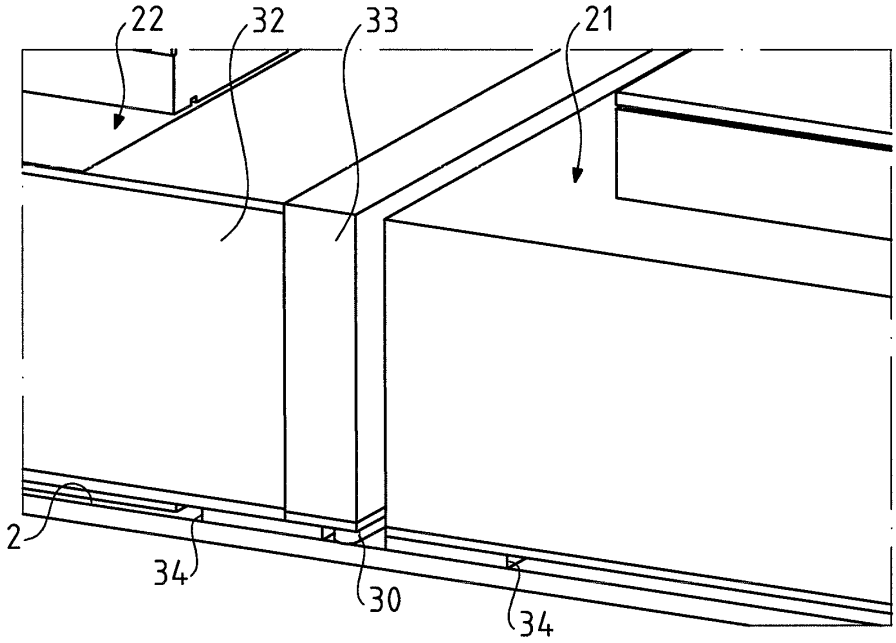

FIG.11

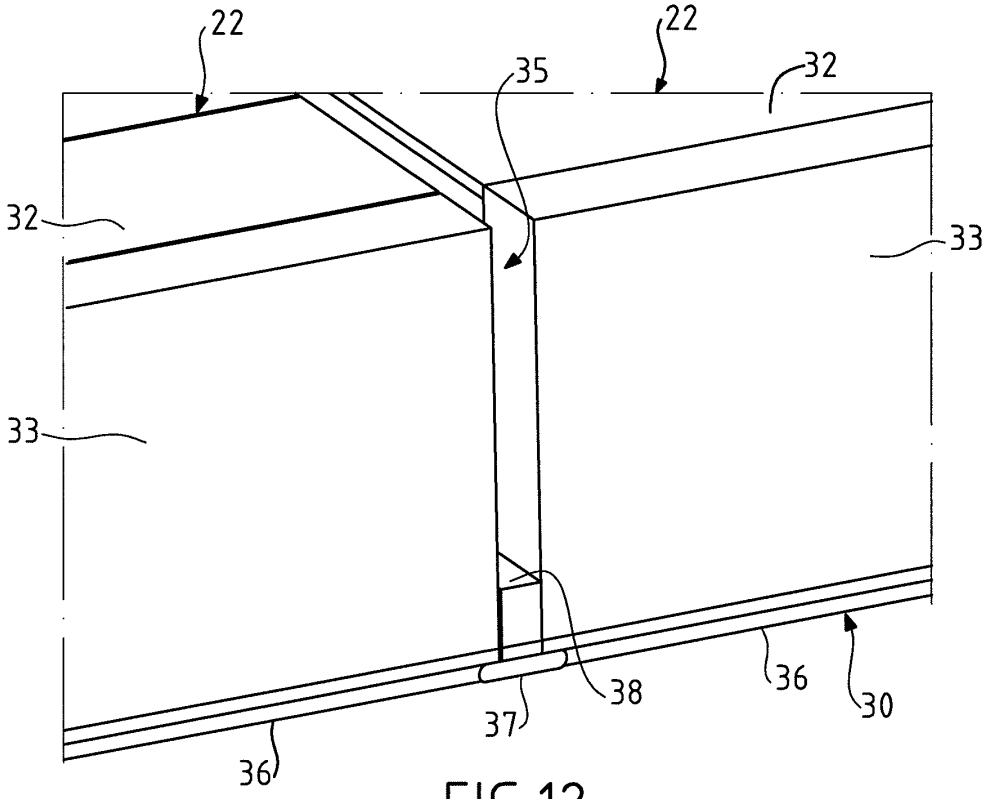

FIG.12

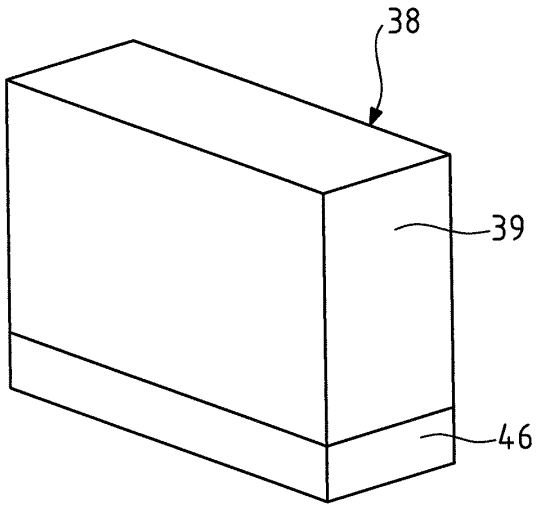

FIG.13