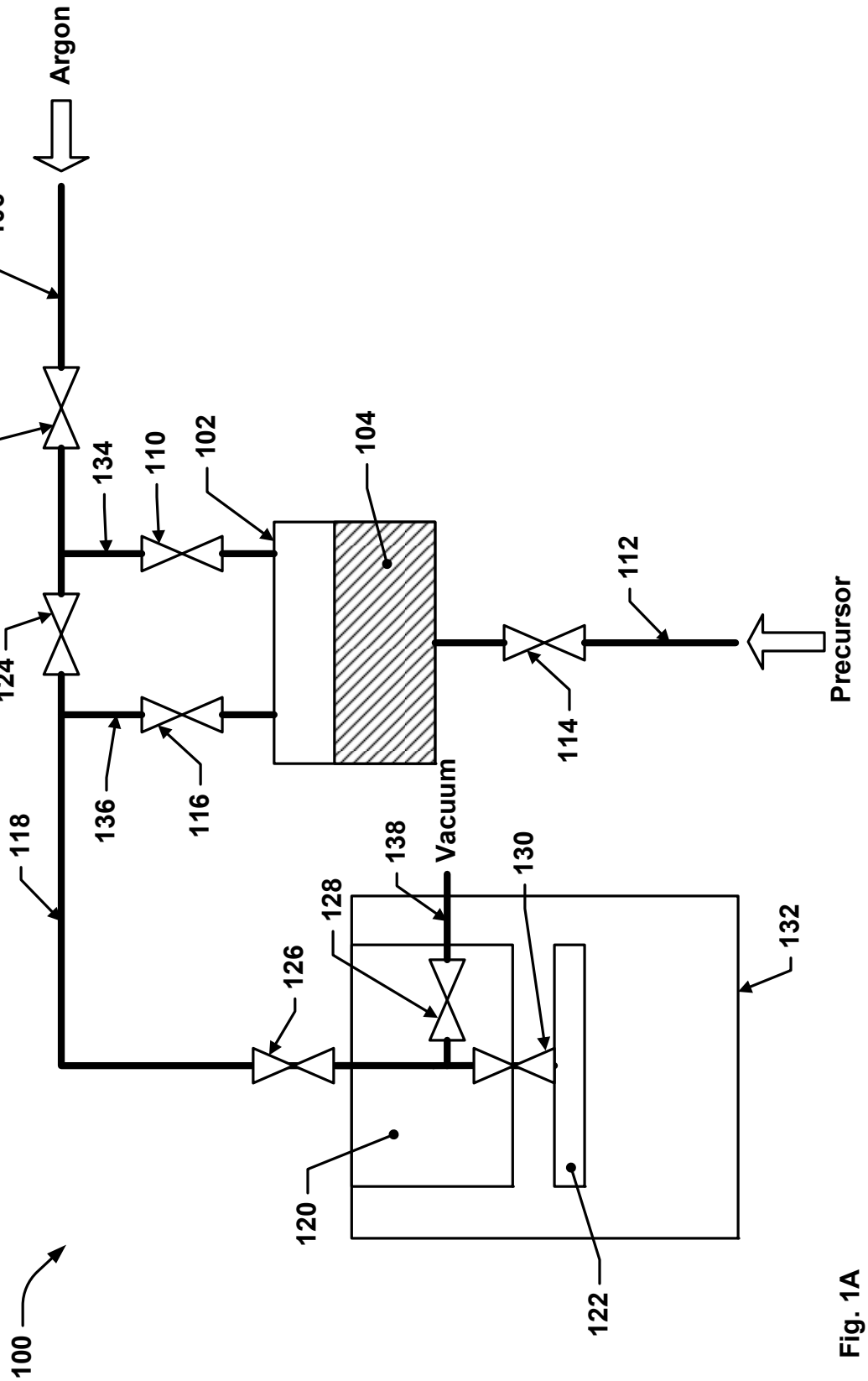
Argon
106
108
134
110
102
104
112
Precursor
124
114
136
116
118
138
Vacuum
130
128
132
126
120
122
100

Fig. 1A

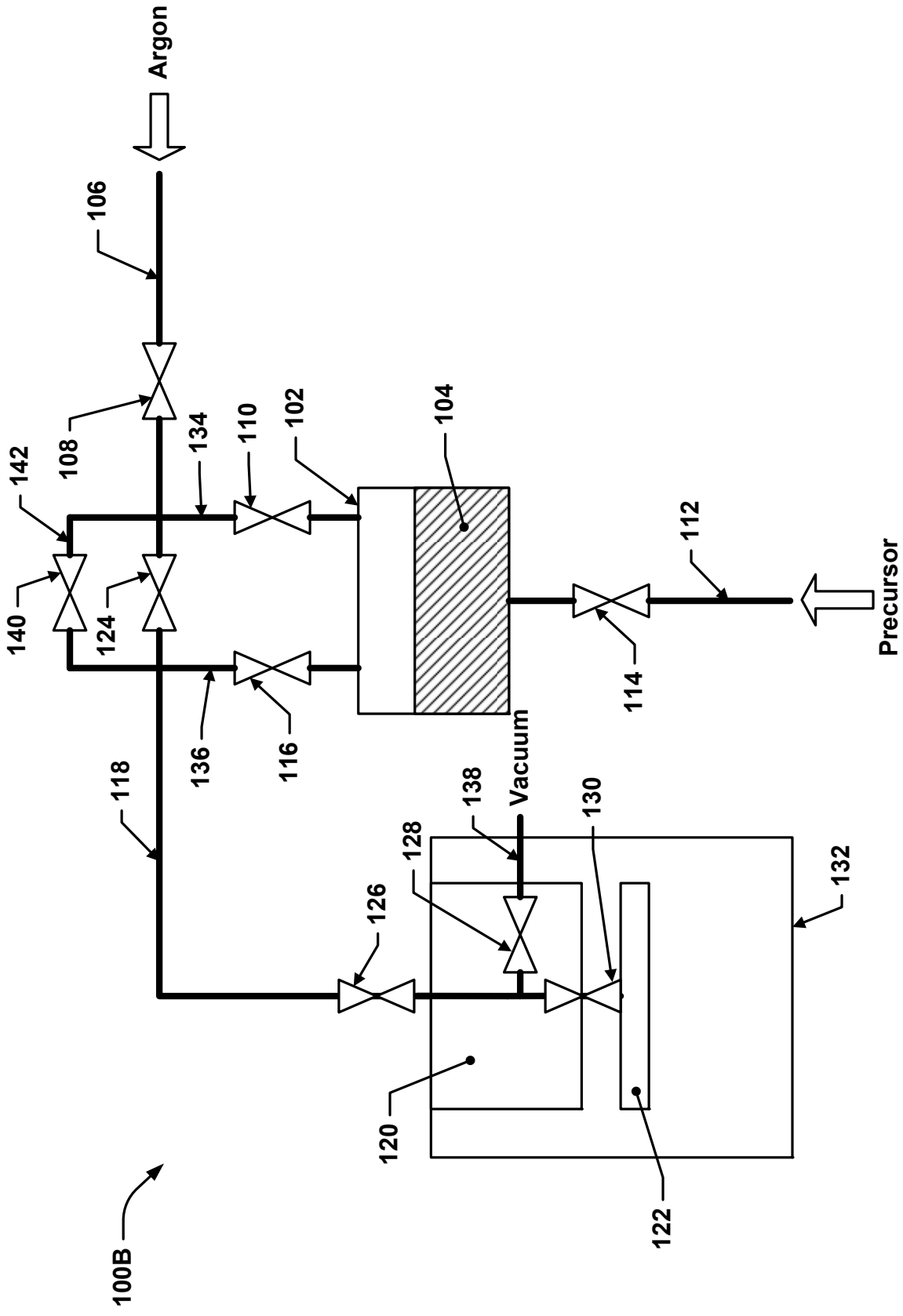
Argon
106
108
142
134
110
102
104
140
124
112
Precursor
114
136
116
118
138
Vacuum
130
128
132
126
120
122
100B

Fig. 1B

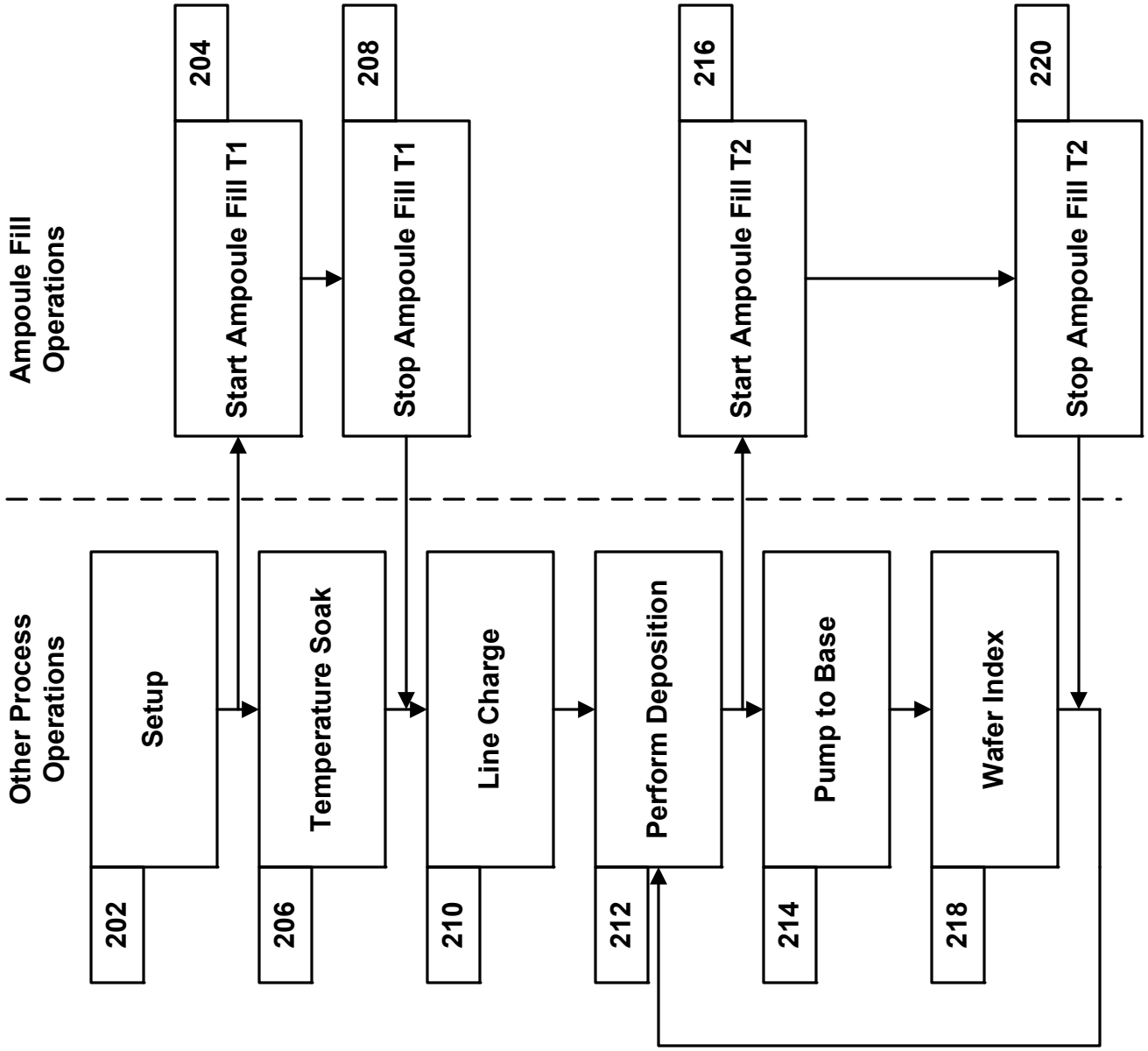
Ampoule Fill Operations
Other Process Operations
Setup
Temperature Soak
Line Charge
Perform Deposition
Pump to Base
Wafer Index
Start Ampoule Fill T1
Stop Ampoule Fill T1
Start Ampoule Fill T2
Stop Ampoule Fill T2
202
204
206
208
210
212
214
216
218
220

Fig. 2

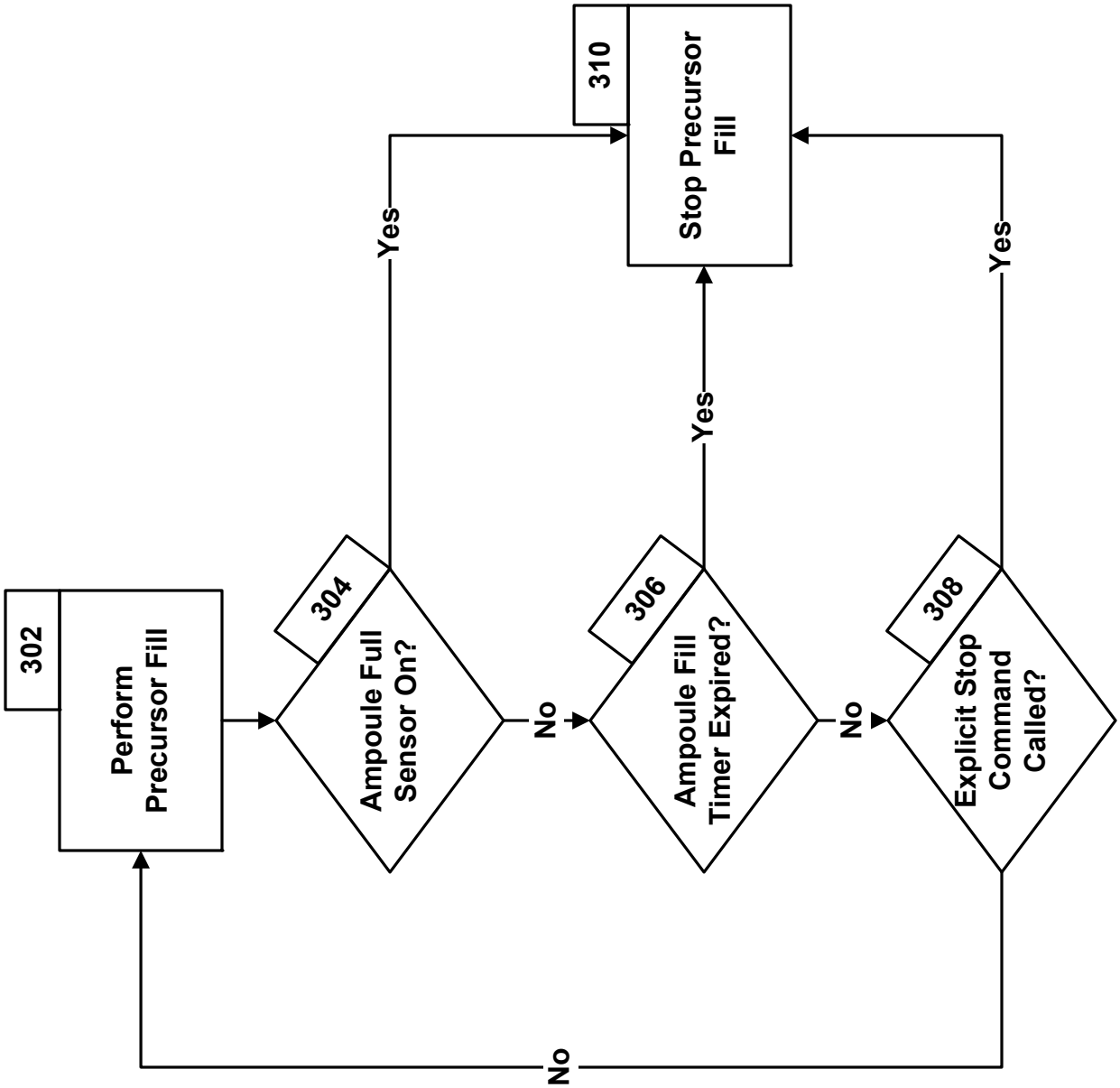
302
Perform Precursor Fill
304
Ampoule Full Sensor On?
306
Ampoule Fill Timer Expired?
308
Explicit Stop Command Called?
310
Stop Precursor Fill
Yes
No
Yes
No
Yes
No

Fig. 3

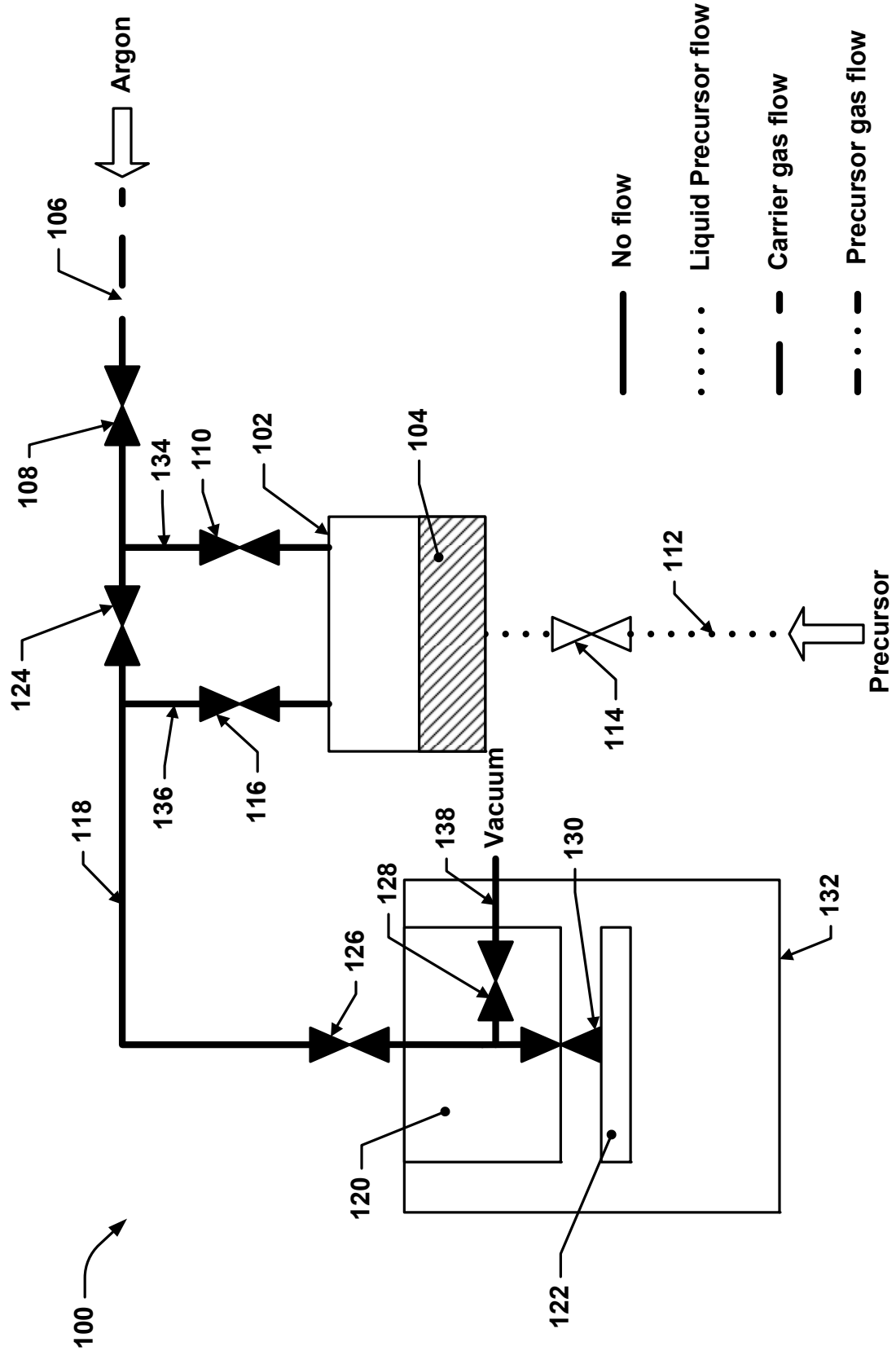
Argon
106
108
134
110
102
104
124
136
116
118
138
Vacuum
130
128
126
132
120
122
100
No flow
Liquid Precursor flow
Carrier gas flow
Precursor gas flow
112
114
Precursor

Fig. 4A

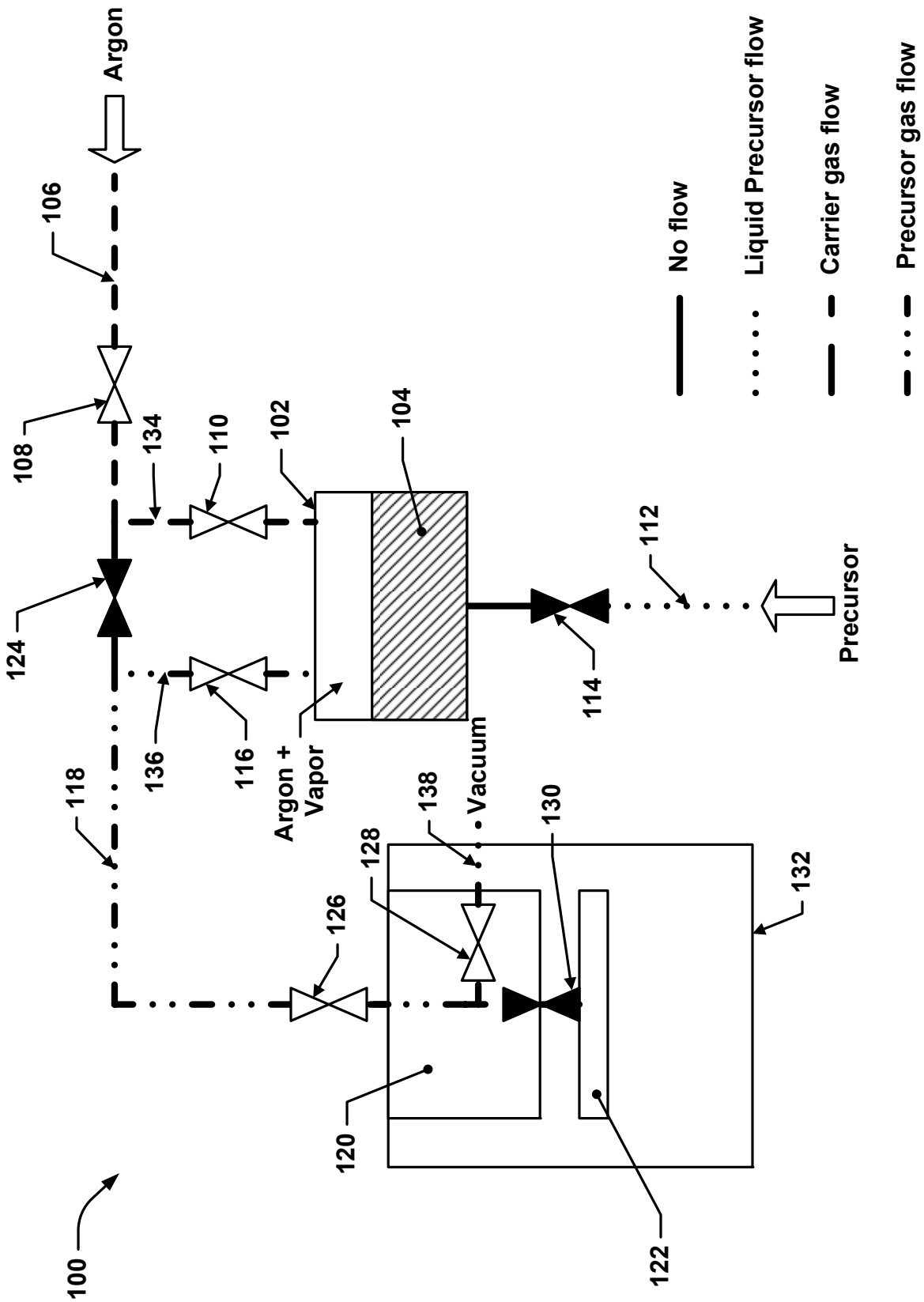
Argon
106
108
134
110
102
104
124
112
Precursor
136
116
Argon +
Vapor
114
118
138
Vacuum
130
128
132
126
120
122
100
No flow
Liquid Precursor flow
Carrier gas flow
Precursor gas flow

Fig. 4B

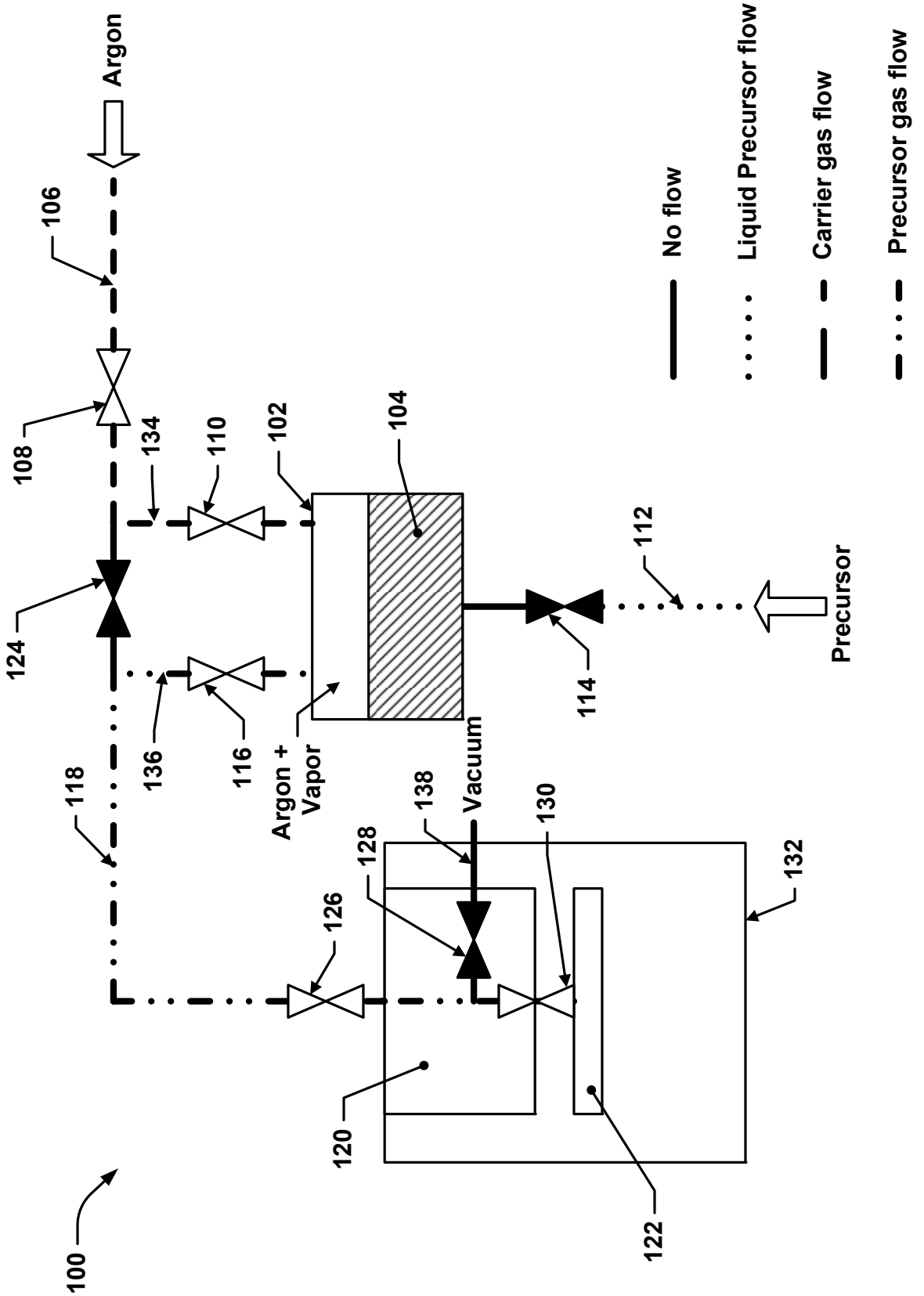
Argon
106
108
134
110
102
104
124
112
Precursor
114
136
116
Argon +
Vapor
118
138
Vacuum
130
128
132
126
120
122
100
No flow
Liquid Precursor flow
Carrier gas flow
Precursor gas flow

Fig. 4C

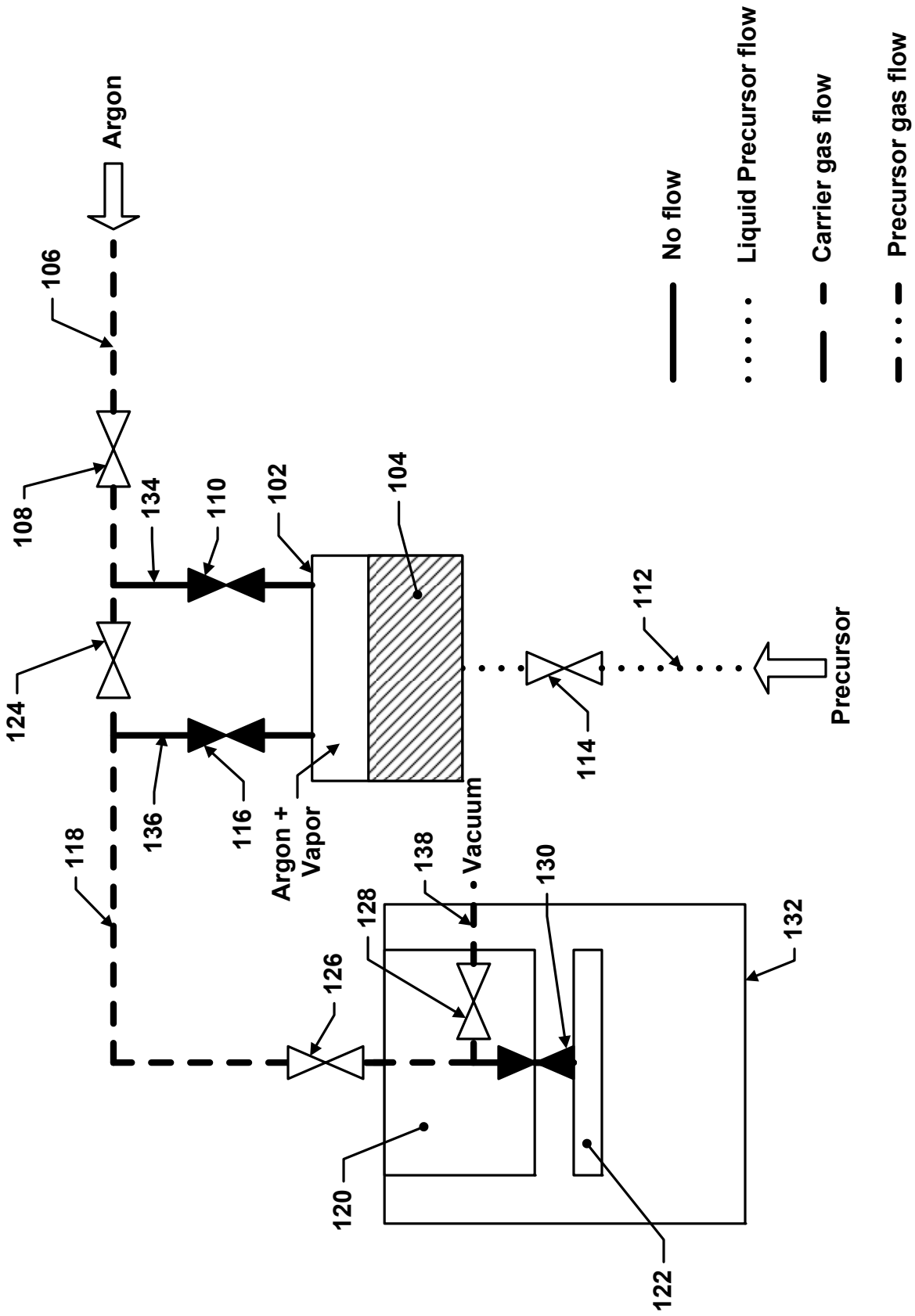
Argon
106
108
134
110
102
104
124
112
Precursor
114
136
116
Argon +
Vapor
118
138
Vacuum
130
128
132
126
120
122
No flow
Liquid Precursor flow
Carrier gas flow
Precursor gas flow

Fig. 4D

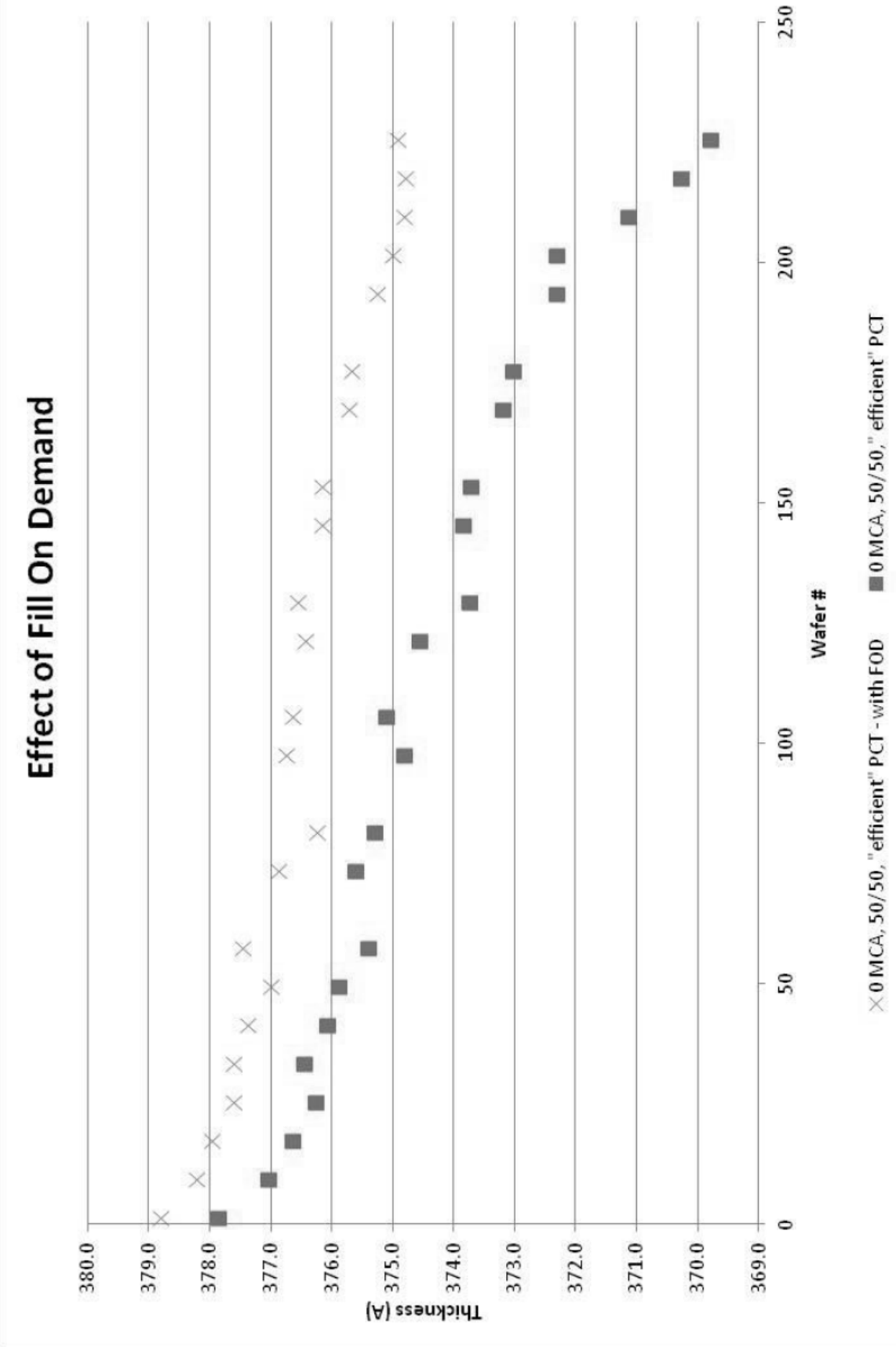
Effect of Fill On Demand
Thickness (Å)
380.0
379.0
378.0
377.0
376.0
375.0
374.0
373.0
372.0
371.0
370.0
369.0
0
50
100
150
200
250
Wafer #
0 MCA, 50/50, "efficient" PCT - with FOD
0 MCA, 50/50, " efficient" PCT

Fig. 5

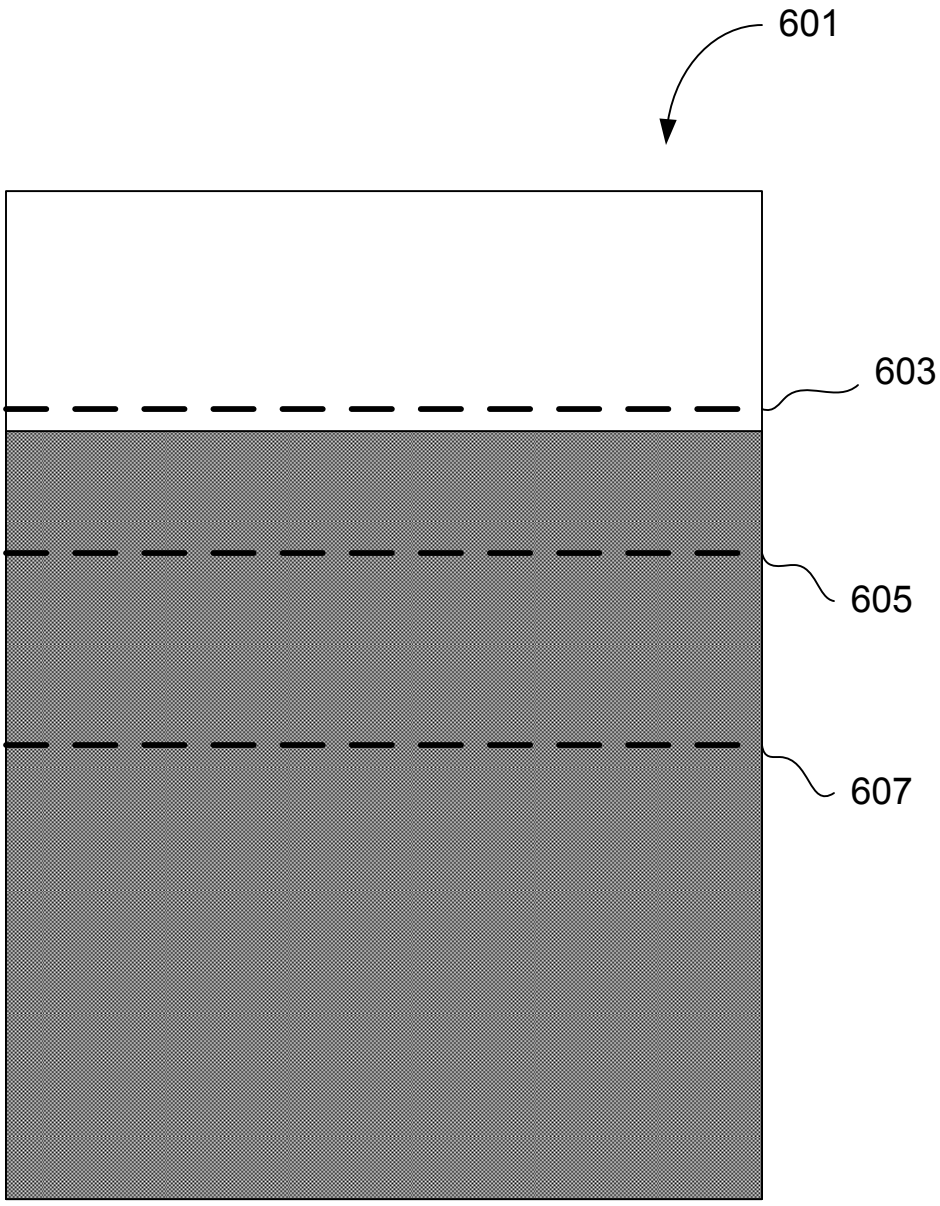

Fig. 6

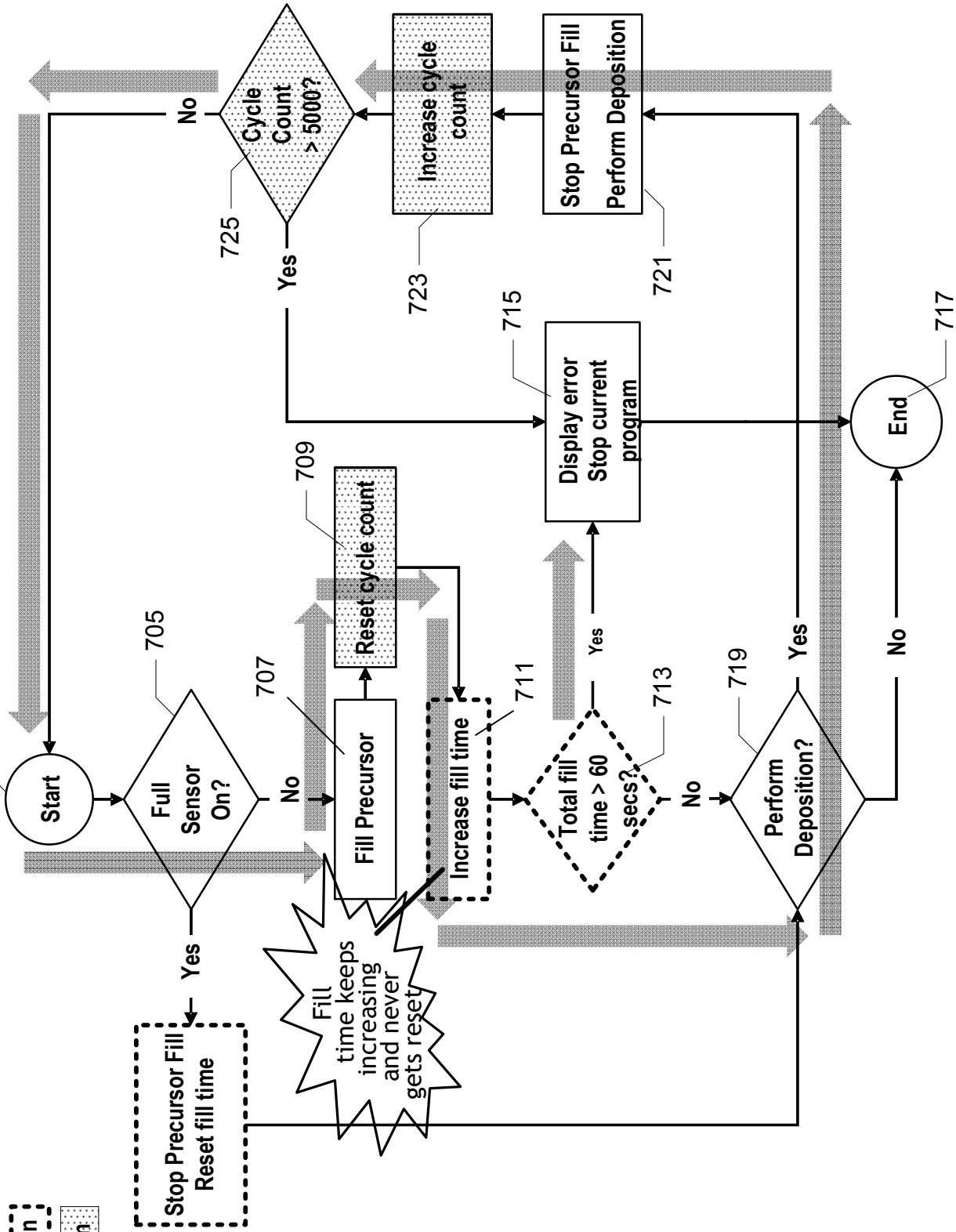
Start
703
Full Sensor On?
705
No
Yes
Fill Precursor
707
Reset cycle count
709
Increase fill time
711
Total fill time > 60 secs?
713
Yes
No
Perform Deposition?
719
Yes
No
End
717
Display error Stop current program
715
Cycle Count > 5000?
725
No
Yes
Increase cycle count
723
Stop Precursor Fill Perform Deposition
721
Fill time keeps increasing and never gets reset
Stop Precursor Fill Reset fill time
Overfill Protection
Empty Protection

Fig. 7

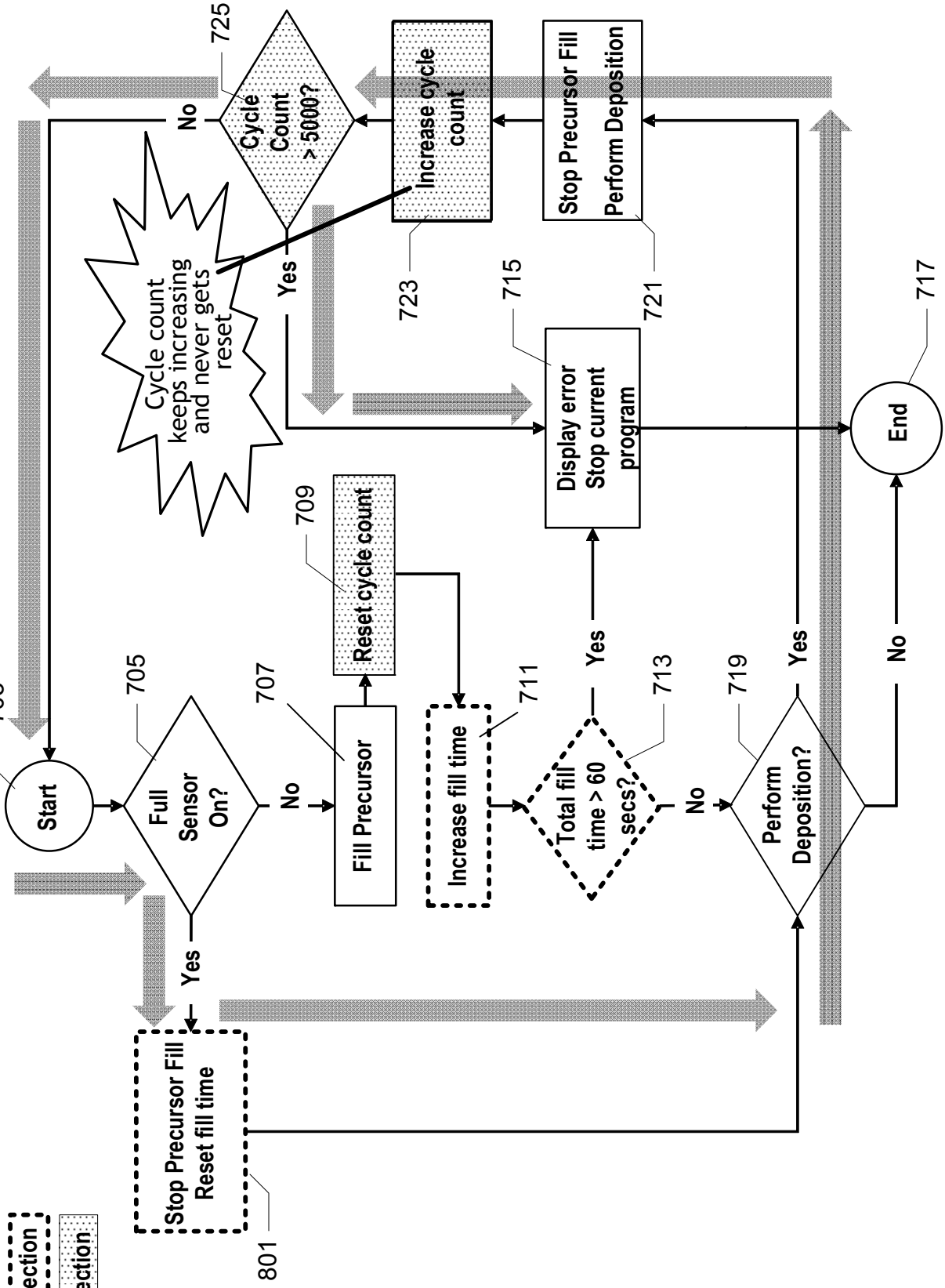
Start
703
Full Sensor On?
705
No
Yes
Fill Precursor
707
Reset cycle count
709
Increase fill time
711
Total fill time > 60 secs?
713
No
Yes
Perform Deposition?
719
Yes
No
End
717
Display error Stop current program
715
Cycle count keeps increasing and never gets reset
Cycle Count > 5000?
725
No
Yes
Increase cycle count
723
Stop Precursor Fill Perform Deposition
721
Stop Precursor Fill Reset fill time
801
Overfill Protection
Empty Protection

Fig. 8