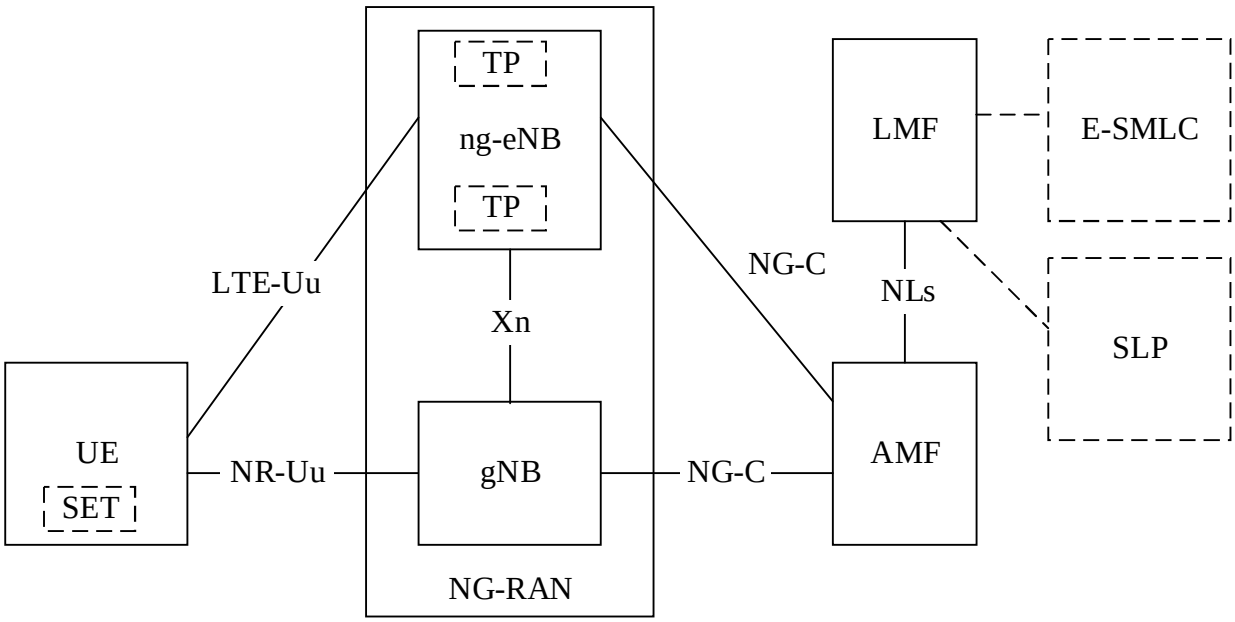
TP
ng-eNB
TP
LTE-Uu
Xn
UE
SET
NR-Uu
gNB
NG-RAN
NG-C
NG-C
LMF
E-SMLC
NLs
SLP
AMF

FIG. 1

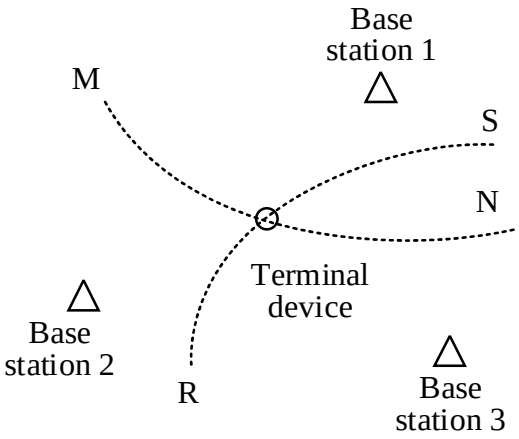
Base
station 1
M
S
N
Terminal
device
Base
station 2
R
Base
station 3

FIG. 2

S310: A location management device receives positioning information, where the positioning information is for determining a first measurement TDOA and a second measurement TDOA, the first measurement TDOA is a difference between time at which a signal sent by a to-be-positioned terminal device arrives at a first location measurement device and a second location measurement device, and the second measurement TDOA is a difference between time at which a signal sent by a reference device arrives at the first location measurement device and the second location measurement device

S320: The location management device determines a second theoretical TDOA based on a first theoretical TDOA and a difference between the first measurement TDOA and the second measurement TODA, where the first theoretical TDOA is a theoretical difference between the time at which the signal sent by the reference device arrives at the first location measurement device and the second location measurement device, and the second theoretical TDOA is a theoretical difference between the time at which the signal sent by the to-be-positioned terminal device arrives at the first location measurement device and the second location measurement device

S330: The location management device positions the to-be-positioned terminal device based on the second theoretical TDOA

FIG. 3

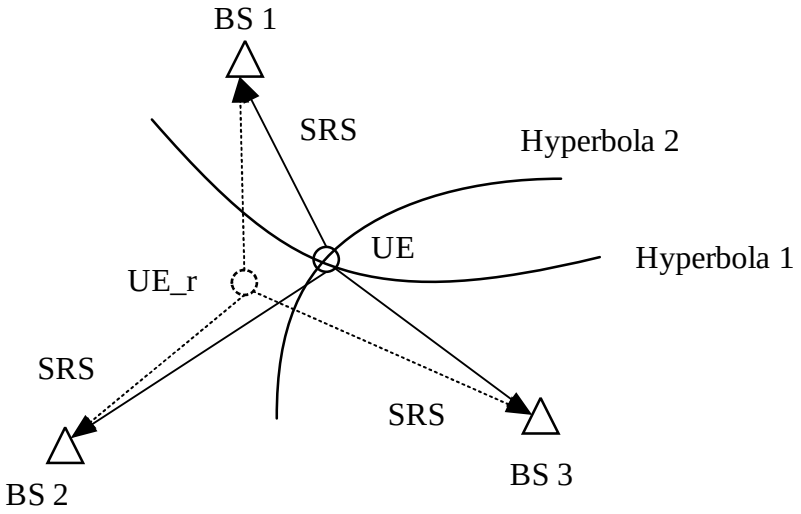

FIG. 4

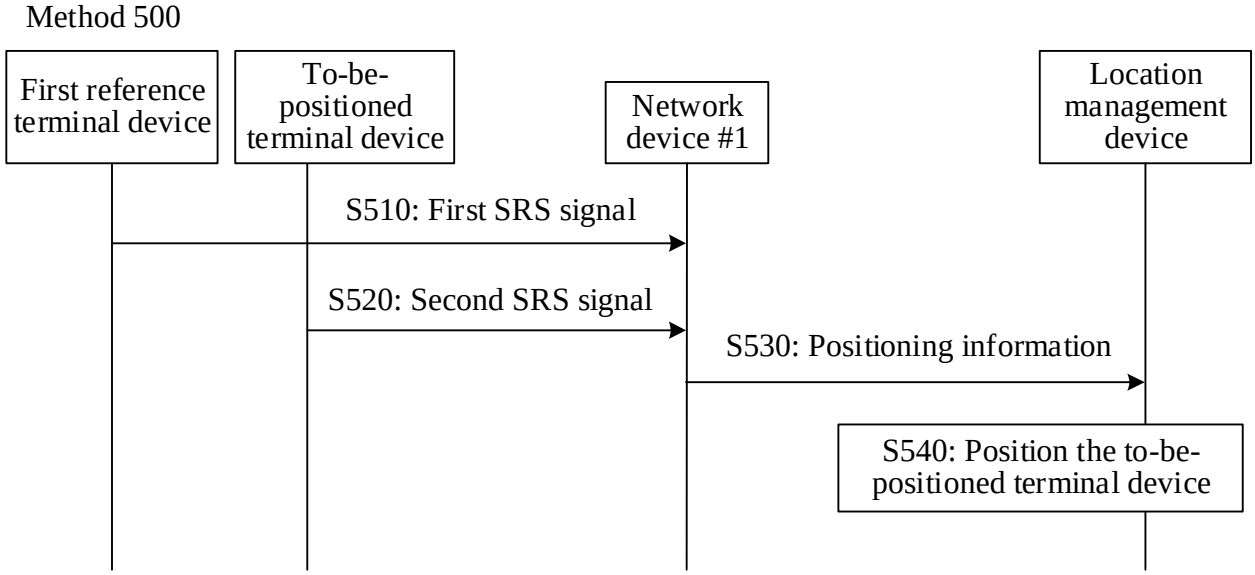
Method 500
First reference terminal device
To-be-positioned terminal device
Network device #1
Location management device
S510: First SRS signal
S520: Second SRS signal
S530: Positioning information
S540: Position the to-be-positioned terminal device

FIG. 5

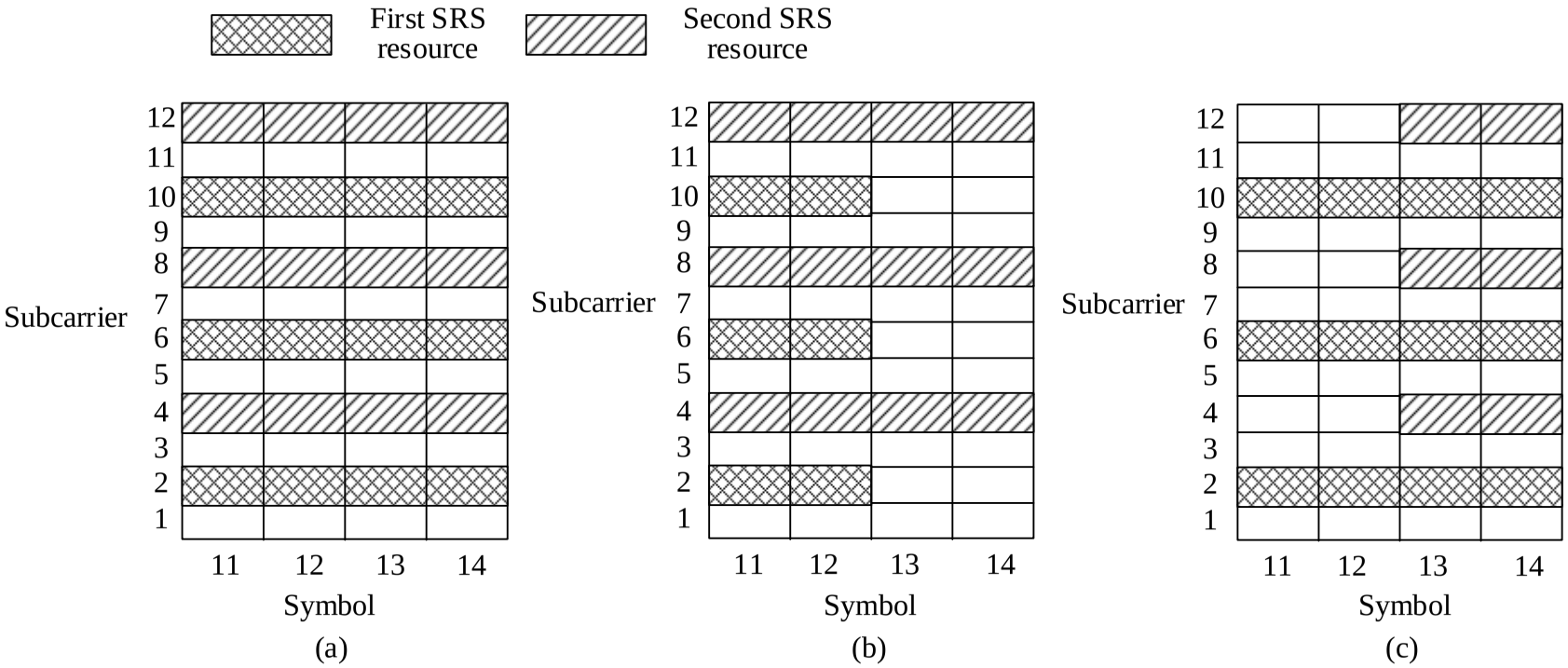
First SRS resource
Second SRS resource
Subcarrier
12
11
10
9
8
7
6
5
4
3
2
1
11
12
13
14
Symbol
(a)
(b)
(c)

FIG. 6

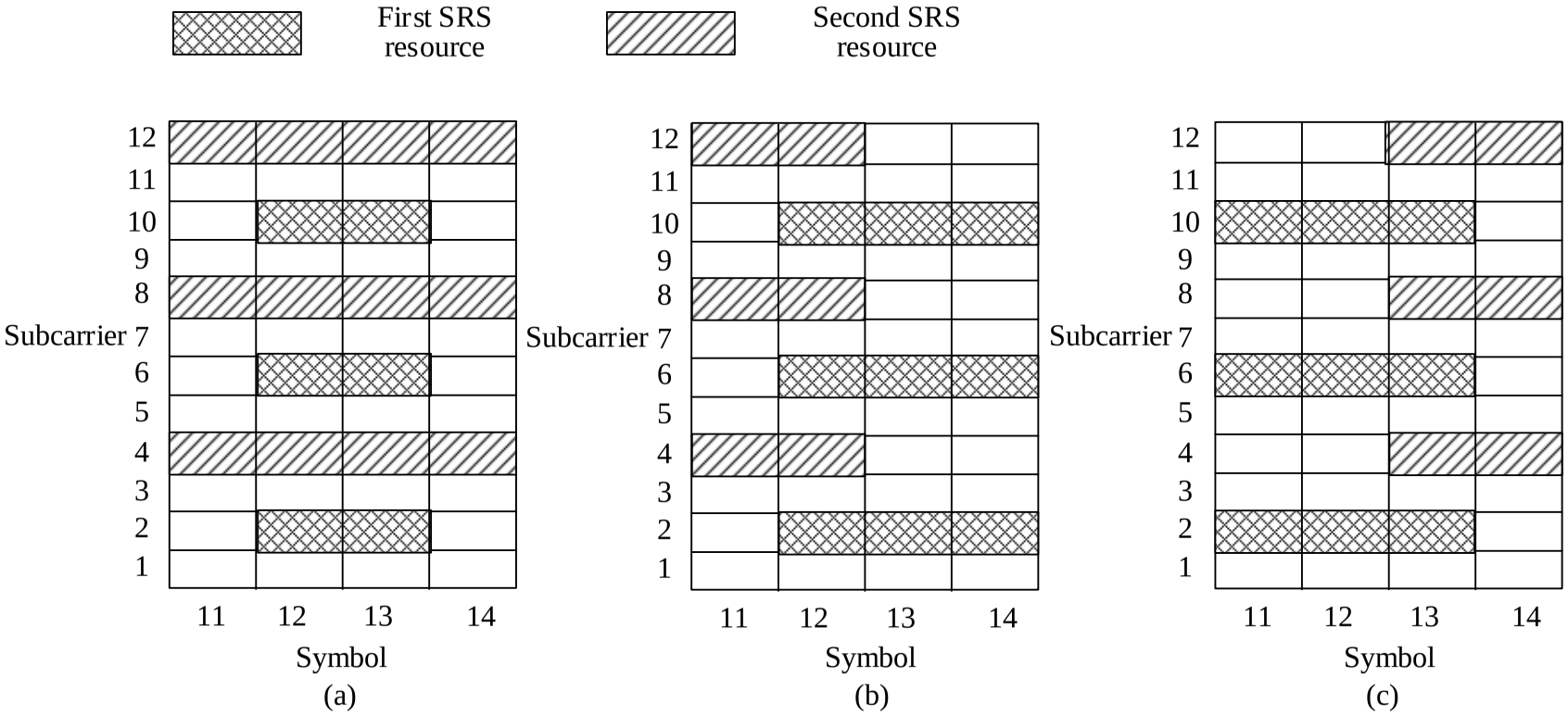
First SRS resource
Second SRS resource
Subcarrier
12
11
10
9
8
7
6
5
4
3
2
1
11
12
13
14
Symbol
(a)
(b)
(c)

FIG. 7

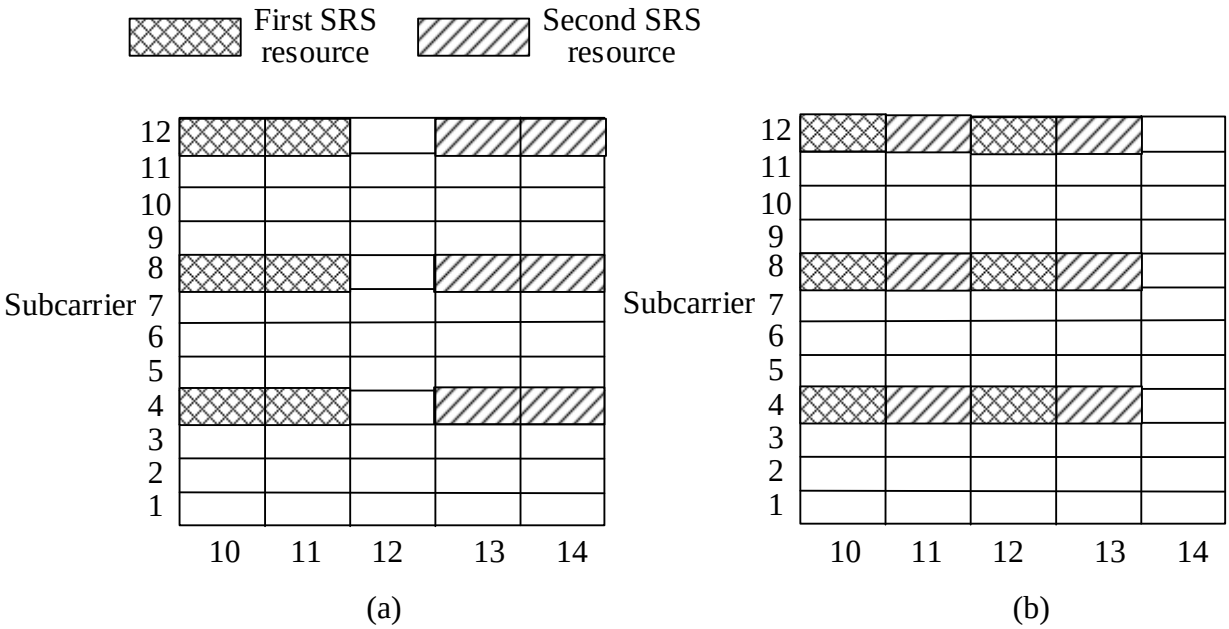
First SRS resource
Second SRS resource
Subcarrier
12
11
10
9
8
7
6
5
4
3
2
1
10
11
12
13
14
(a)
(b)

FIG. 8

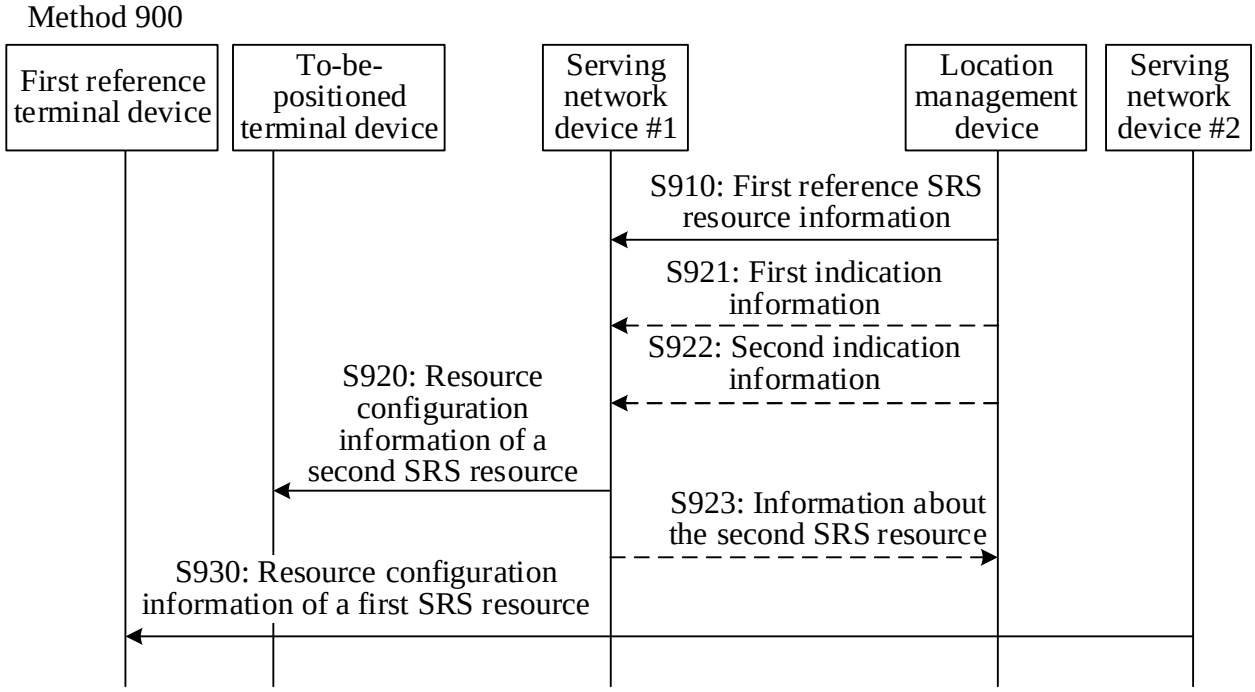
Method 900
First reference terminal device
To-be-positioned terminal device
Serving network device #1
Location management device
Serving network device #2
S910: First reference SRS resource information
S921: First indication information
S922: Second indication information
S920: Resource configuration information of a second SRS resource
S923: Information about the second SRS resource
S930: Resource configuration information of a first SRS resource

FIG. 9

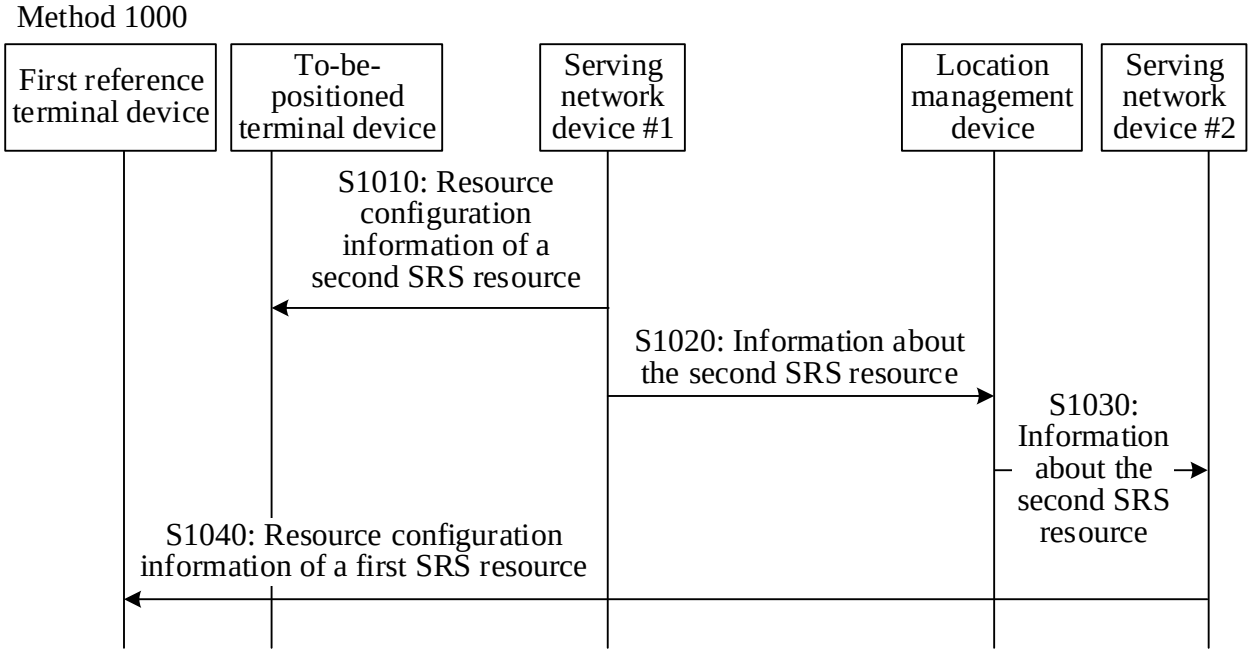
Method 1000
First reference terminal device
To-be-positioned terminal device
Serving network device #1
Location management device
Serving network device #2
S1010: Resource configuration information of a second SRS resource
S1020: Information about the second SRS resource
S1030: Information about the second SRS resource
S1040: Resource configuration information of a first SRS resource

FIG. 10

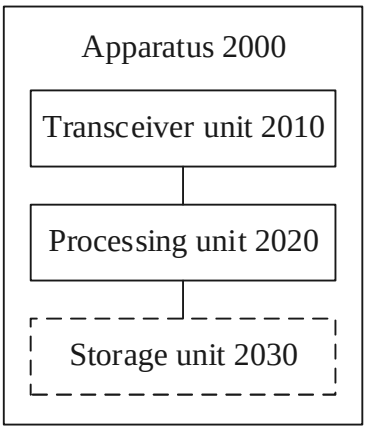
Apparatus 2000
Transceiver unit 2010
Processing unit 2020
Storage unit 2030

FIG. 11

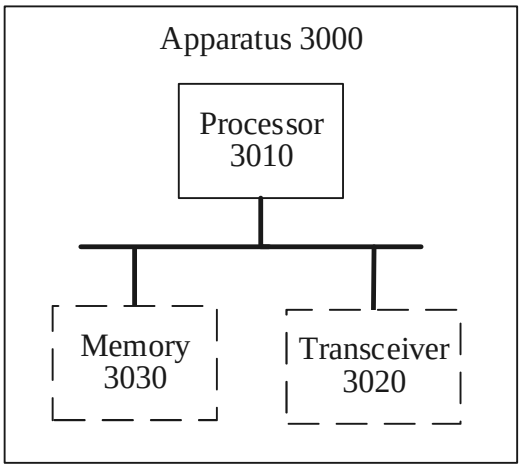
Apparatus 3000
Processor 3010
Memory 3030
Transceiver 3020

FIG. 12

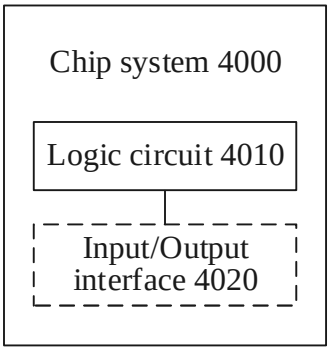
Chip system 4000
Logic circuit 4010
Input/Output interface 4020

FIG. 13