(12) INTERNATIONAL APPLICATION PUBLISHED UNDER THE PATENT COOPERATION TREATY (PCT)

(19) World Intellectual Property Organization
International Bureau

(43) International Publication Date
7 November 2002 (07.11.2002)

PCT

(10) International Publication Number
WO 02/088832 A2

(51) International Patent Classification[7]: G02C 7/06

(21) International Application Number: PCT/US02/13421

(22) International Filing Date: 26 April 2002 (26.04.2002)

(25) Filing Language: English

(26) Publication Language: English

(30) Priority Data:
09/844,910 27 April 2001 (27.04.2001) US

(71) Applicant: **JOHNSON & JOHNSON VISION CARE, INC.** [US/US]; 7500 Centurion Parkway, Suite 100, Jacksonville, FL 32256 (US).

(72) Inventor: **MENEZES, Edgar, V.**; 6558 Hidden Woods Dr., Roanoke, VA 24018 (US).

(74) Agents: **JOHNSON, Philip, S.** et al.; Johnson & Johnson, One Johnson & Johnson Plaza, New Brunswick, NJ 08933 (US).

(81) Designated States *(national)*: AE, AG, AL, AM, AT, AU, AZ, BA, BB, BG, BR, BY, BZ, CA, CH, CN, CO, CR, CU, CZ, DE, DK, DM, DZ, EC, EE, ES, FI, GB, GD, GE, GH, GM, HR, HU, ID, IL, IN, IS, JP, KE, KG, KP, KR, KZ, LC, LK, LR, LS, LT, LU, LV, MA, MD, MG, MK, MN, MW, MX, MZ, NO, NZ, PH, PL, PT, RO, RU, SD, SE, SG, SI, SK, SL, TJ, TM, TR, TT, TZ, UA, UG, UZ, VN, YU, ZA, ZW.

(84) Designated States *(regional)*: ARIPO patent (GH, GM, KE, LS, MW, MZ, SD, SL, SZ, TZ, UG, ZM, ZW), Eurasian patent (AM, AZ, BY, KG, KZ, MD, RU, TJ, TM), European patent (AT, BE, CH, CY, DE, DK, ES, FI, FR, GB, GR, IE, IT, LU, MC, NL, PT, SE, TR), OAPI patent (BF, BJ, CF, CG, CI, CM, GA, GN, GQ, GW, ML, MR, NE, SN, TD, TG).

Published:
— *without international search report and to be republished upon receipt of that report*

For two-letter codes and other abbreviations, refer to the "Guidance Notes on Codes and Abbreviations" appearing at the beginning of each regular issue of the PCT Gazette.

(54) Title: PROGRESSIVE ADDITION LENSES WITH PRISM POWER ADDED TO IMPROVE WEARER COMFORT

(57) Abstract: The present invention provides progressive addition lenses into which vertical prism power is added. The resulting lens exhibits an improved image quality in comparison to conventional progressive addition lenses.

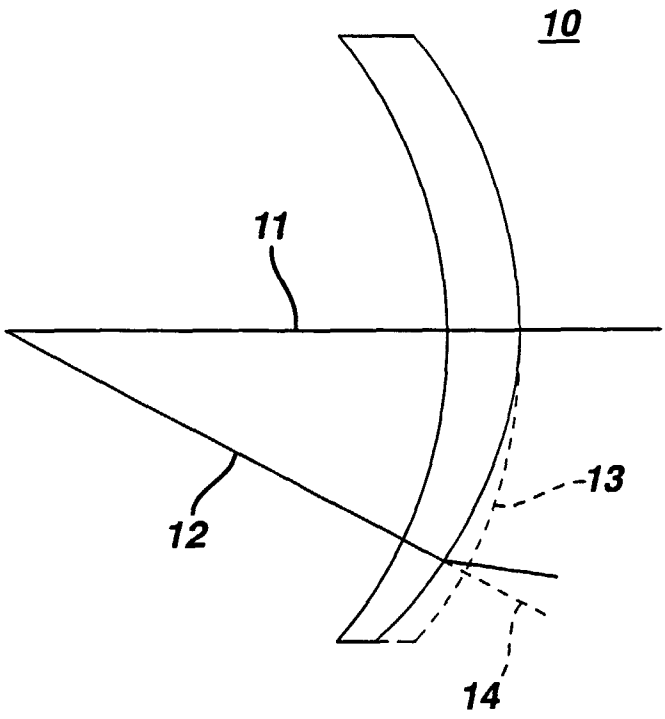

WO 02/088832 A2