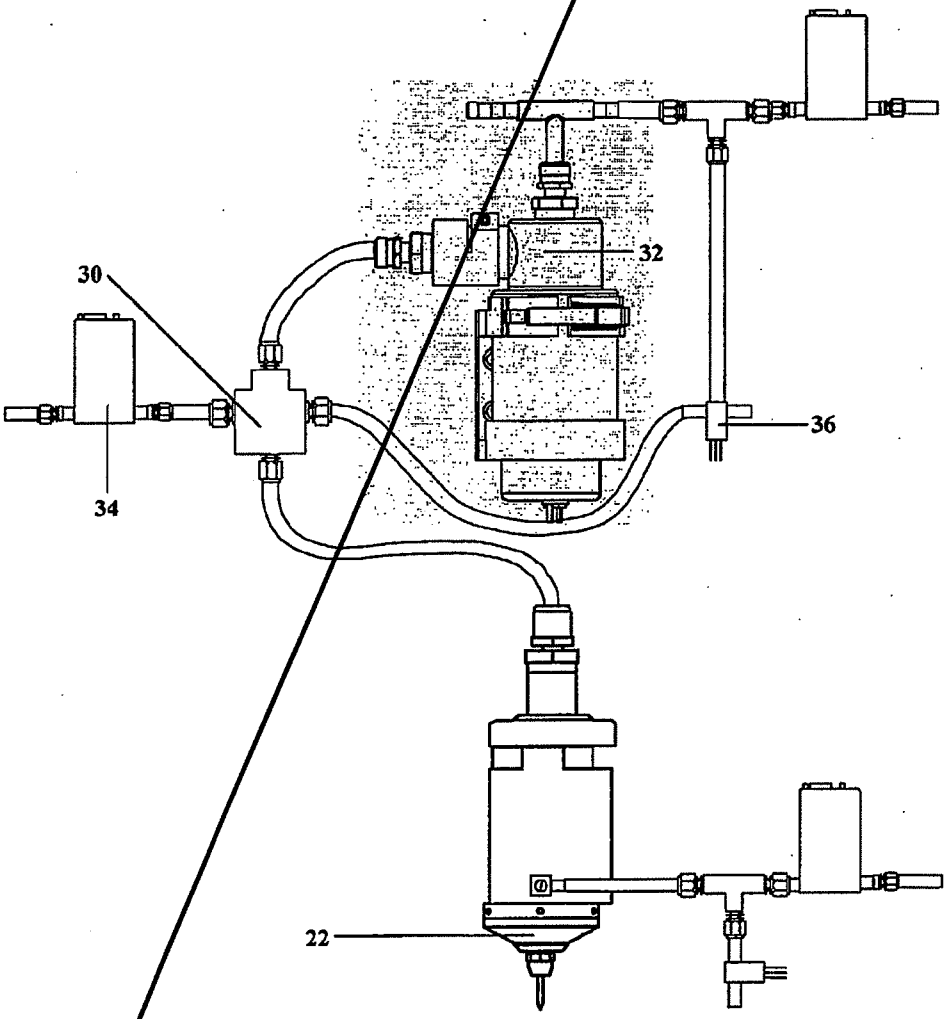

FIGURE 1a

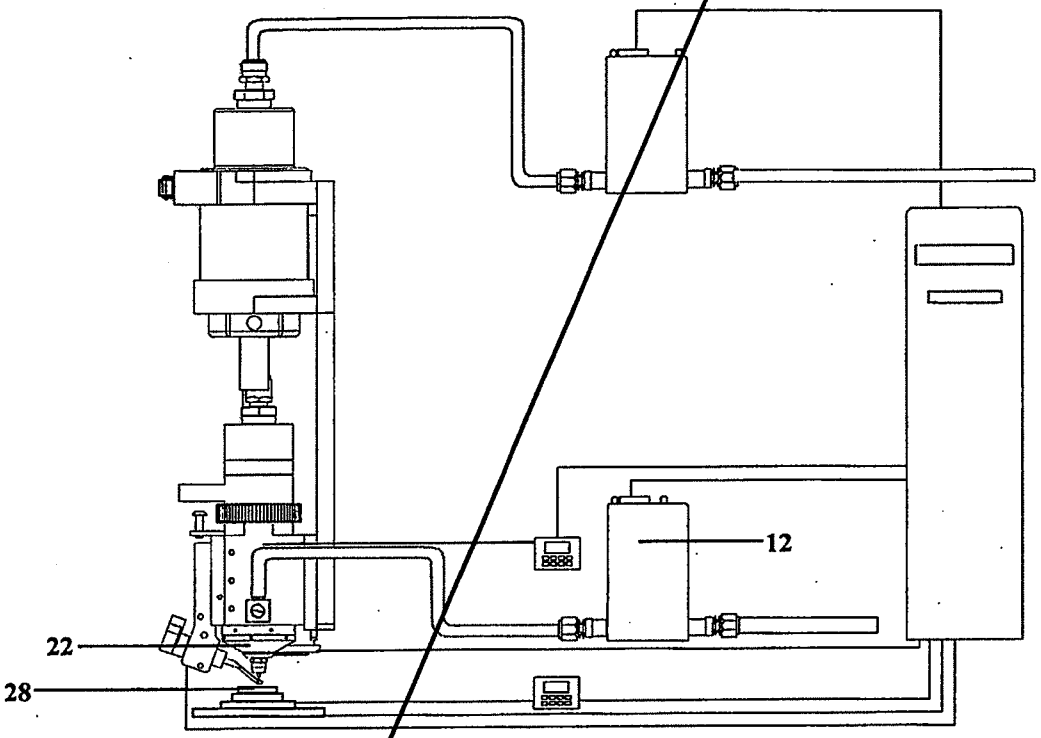

FIGURE 1b

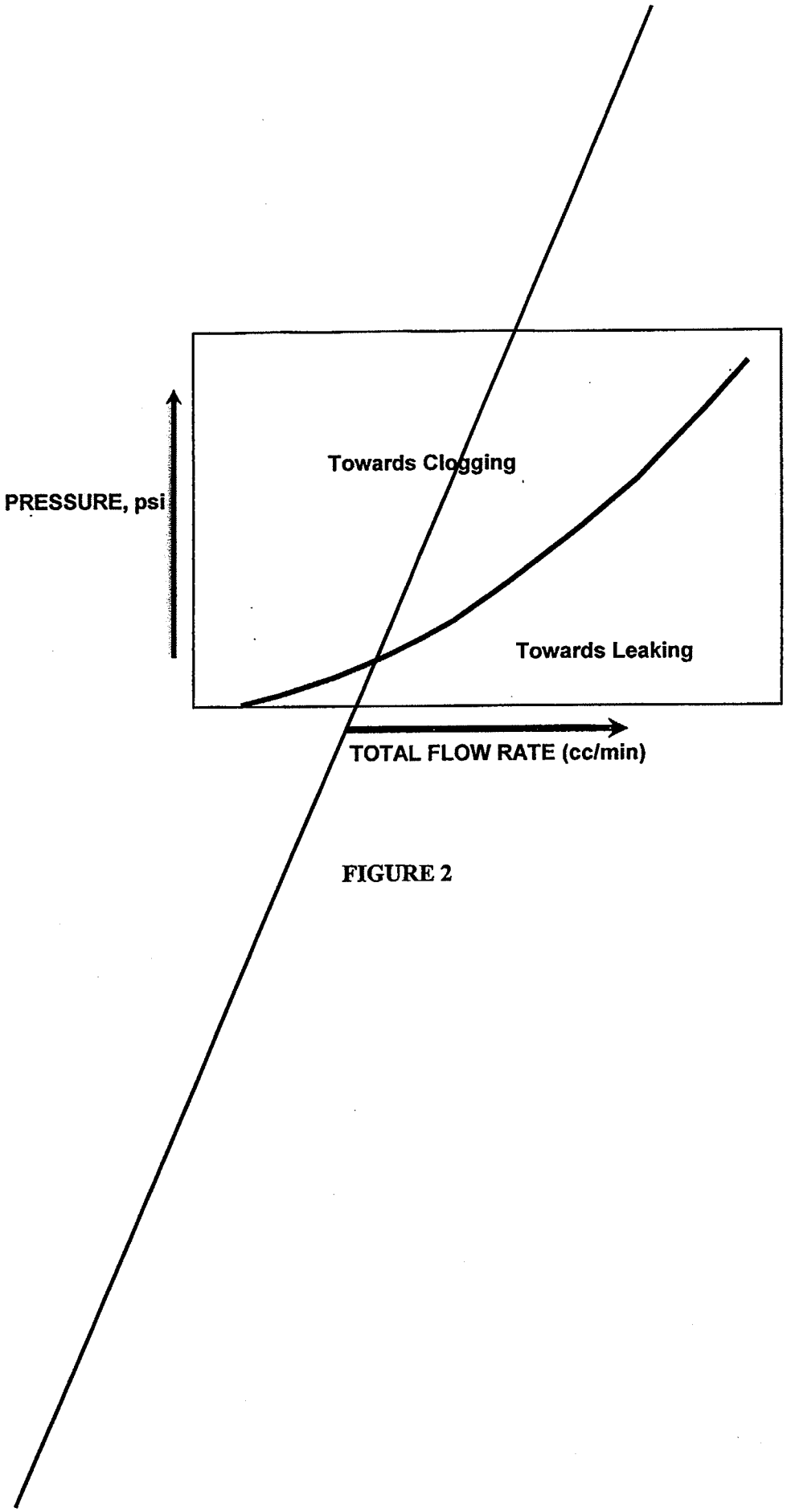
PRESSURE, psi
Towards Clogging
Towards Leaking
TOTAL FLOW RATE (cc/min)

FIGURE 2

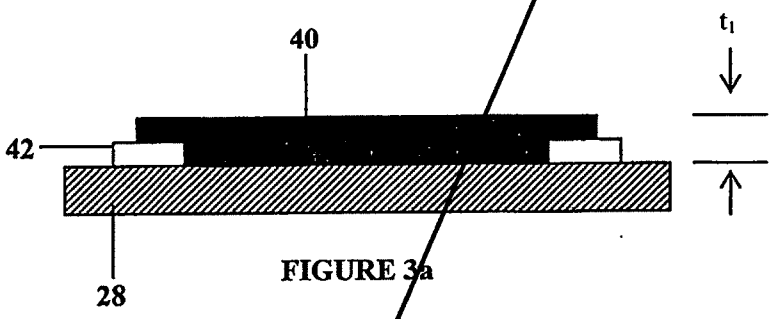

FIGURE 3a

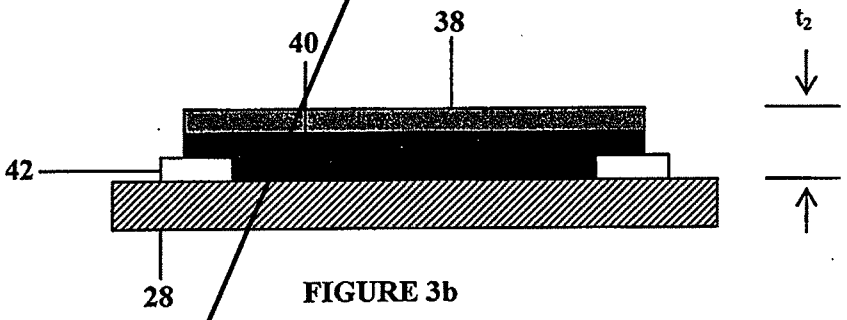

FIGURE 3b

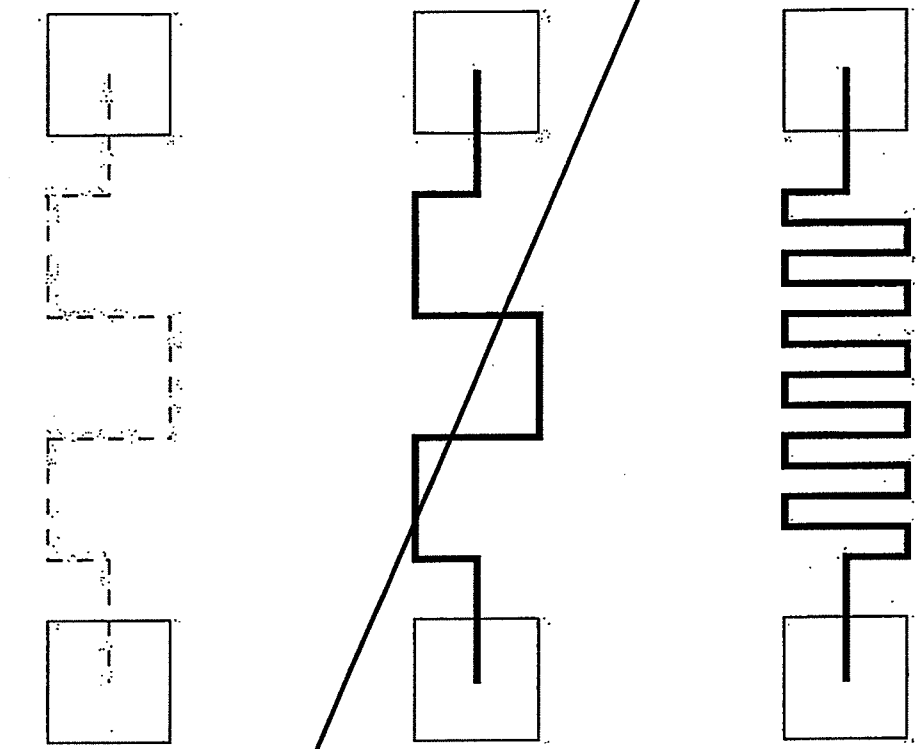

FIGURE 4

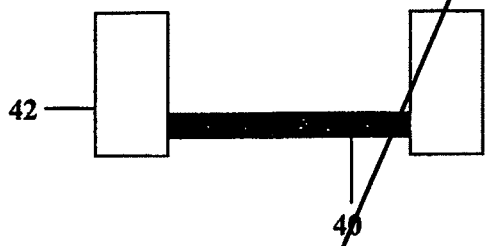

FIGURE 5a

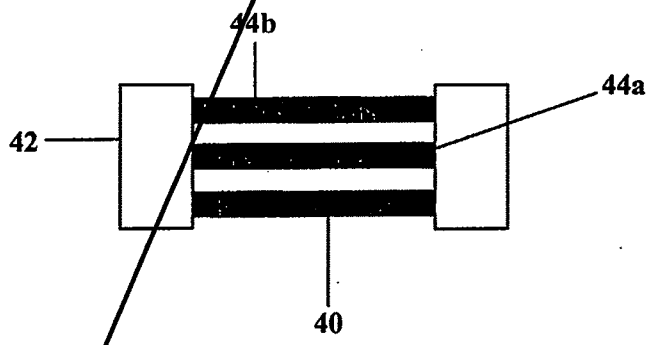

FIGURE 5b

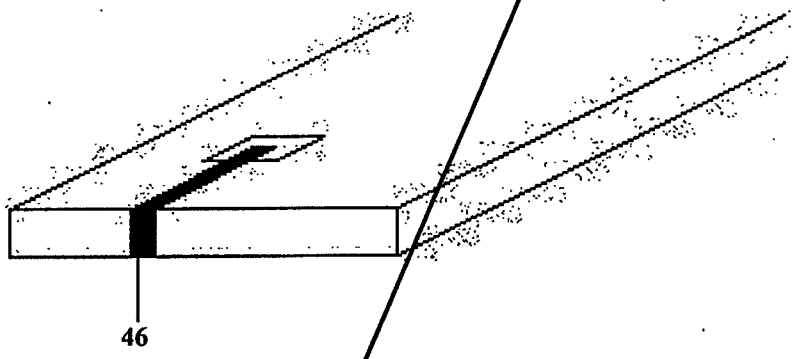

FIGURE 6

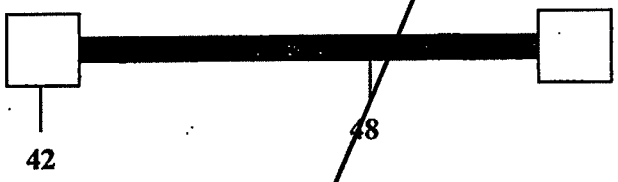

FIGURE 7a



FIGURE 7b

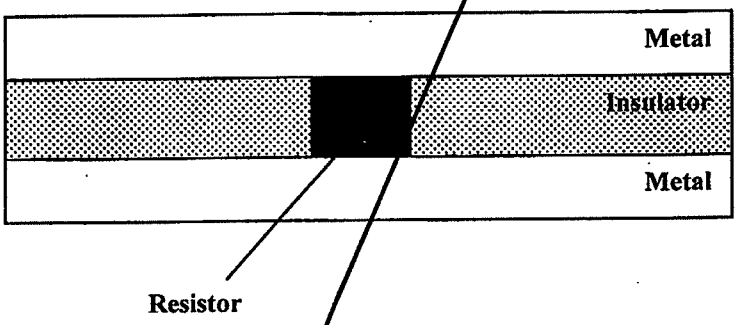

FIGURE 8

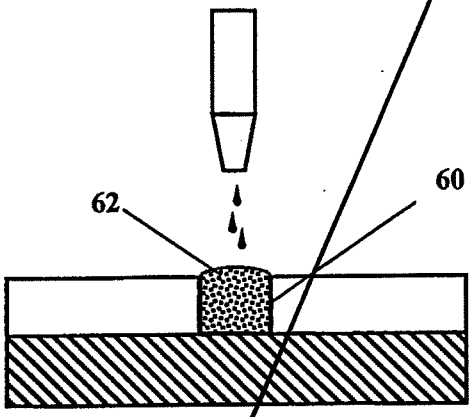

FIGURE 9a

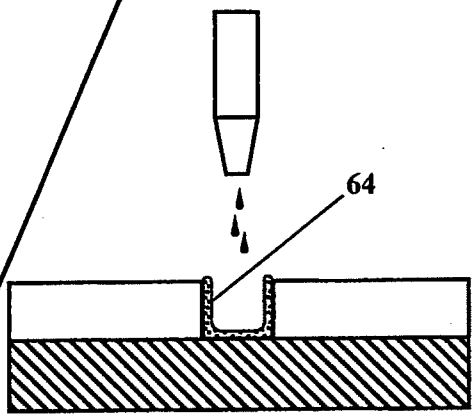

FIGURE 9b

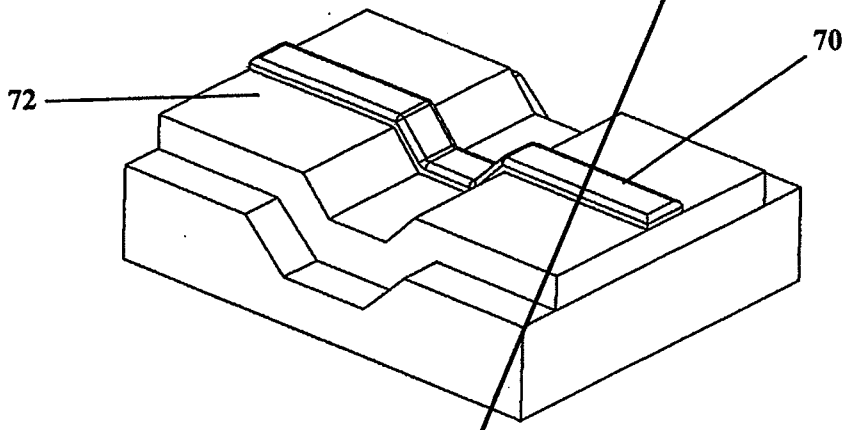

FIGURE 10a

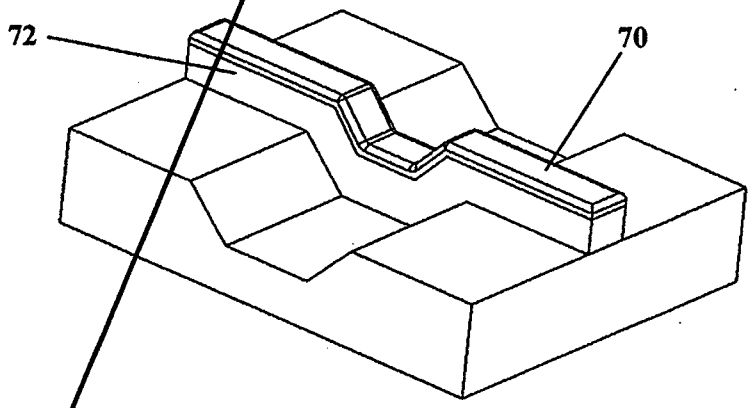

FIGURE 10b

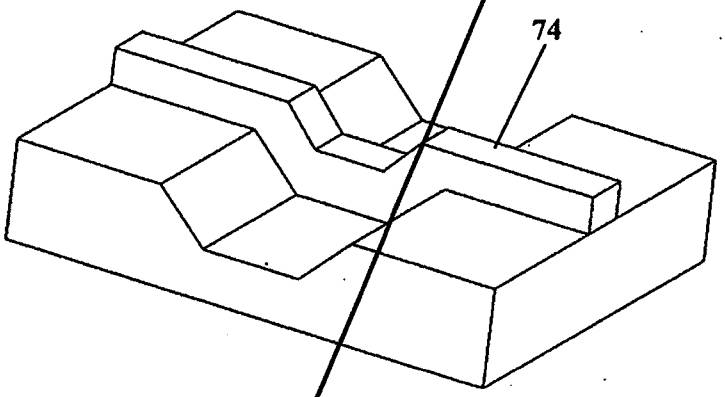

FIGURE 10c

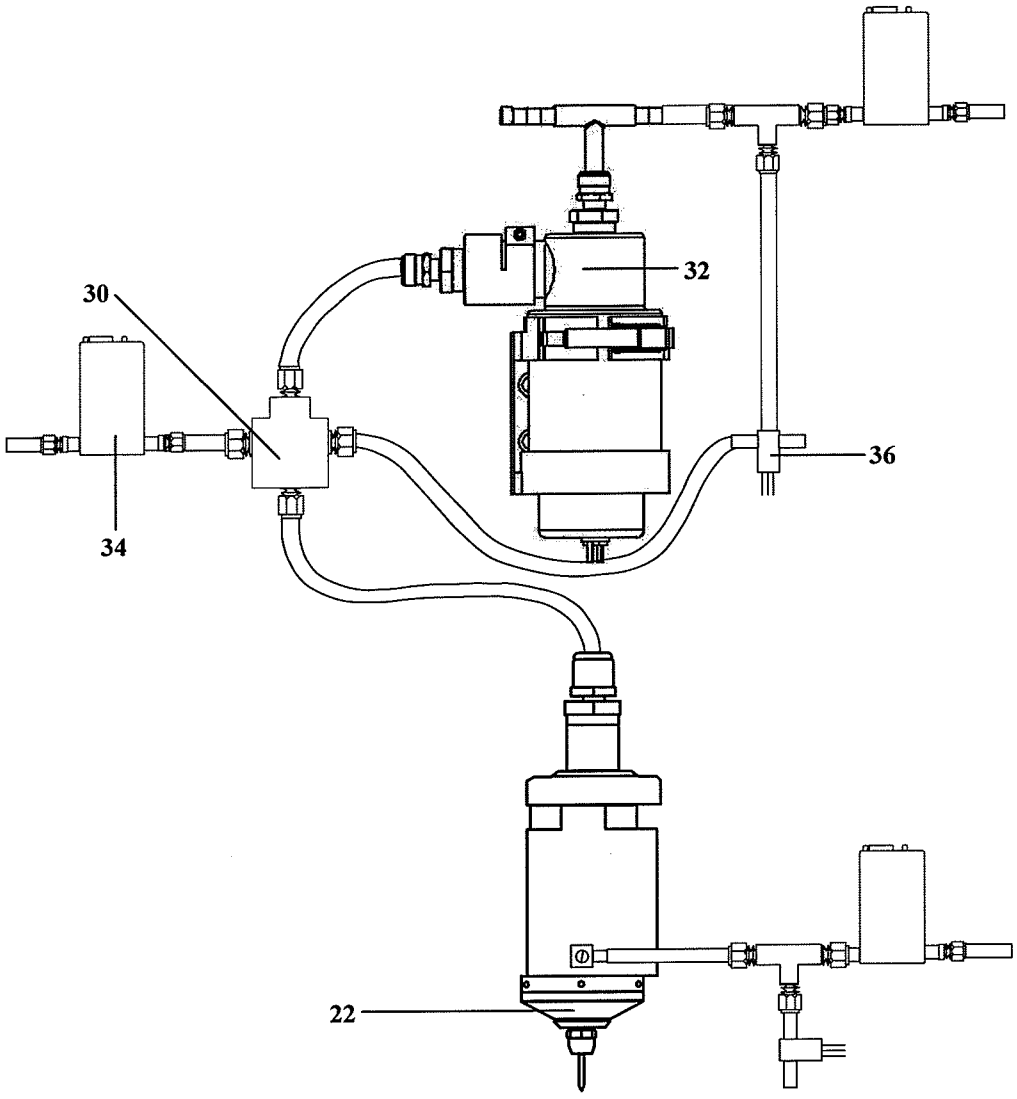

FIGURE 1a

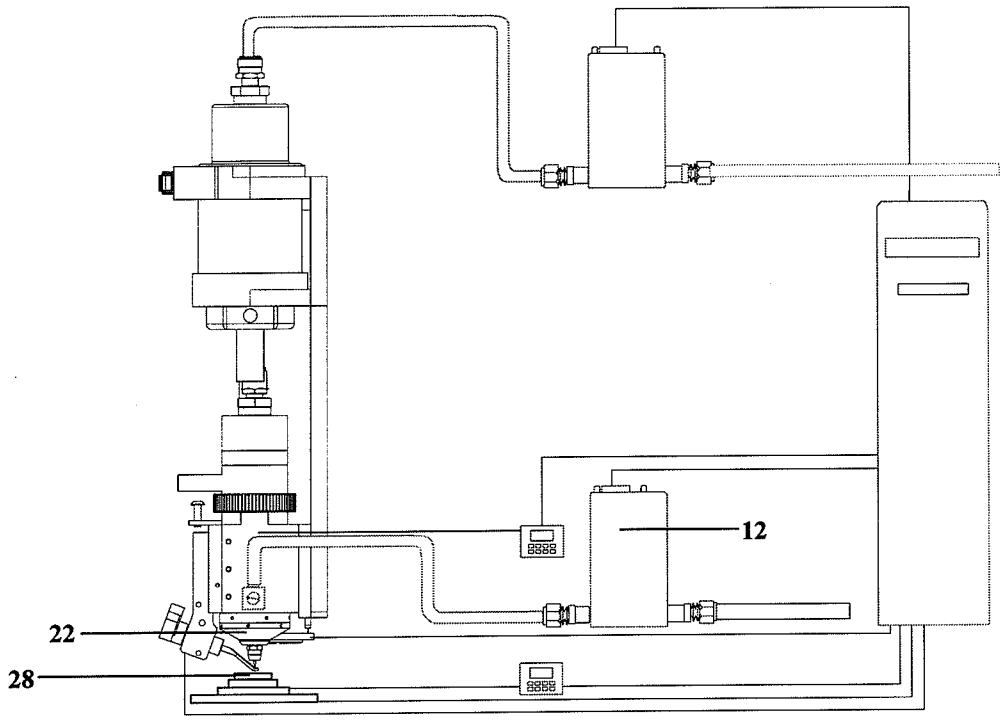

FIGURE 1b

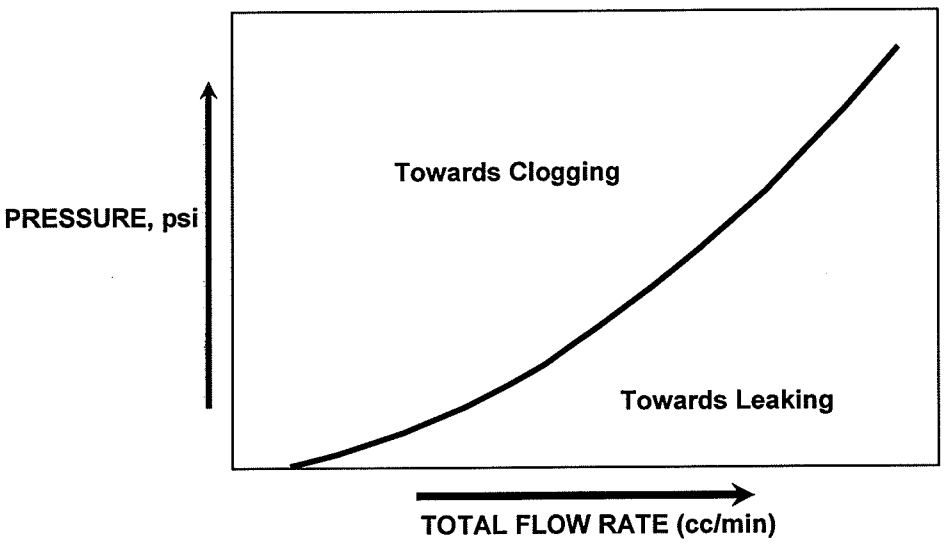
PRESSURE, psi
Towards Clogging
Towards Leaking
TOTAL FLOW RATE (cc/min)

FIGURE 2

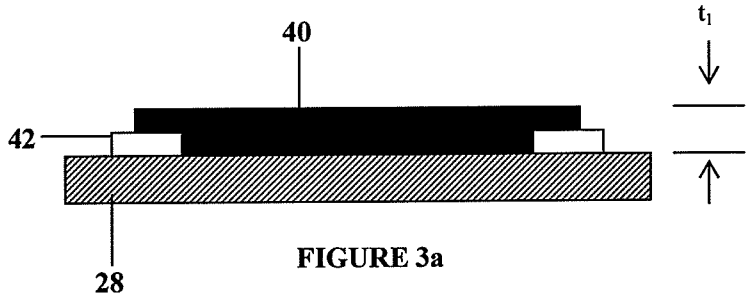

FIGURE 3a

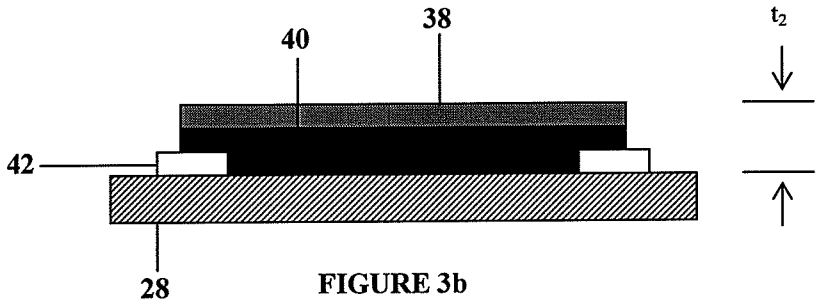

FIGURE 3b

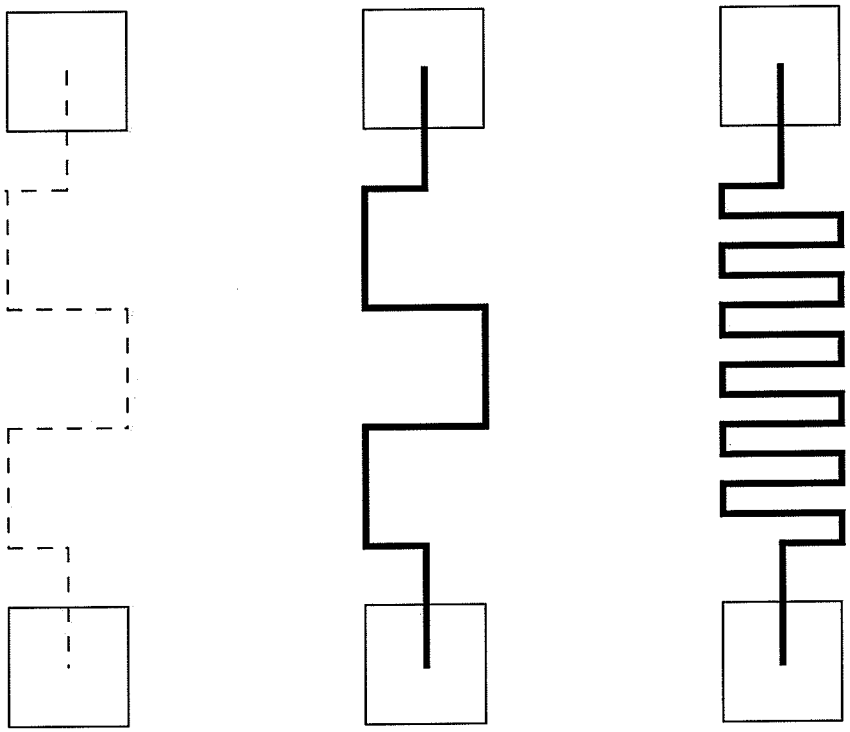

FIGURE 4

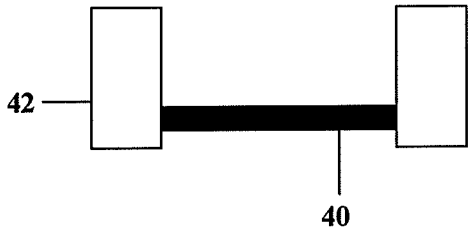

FIGURE 5a

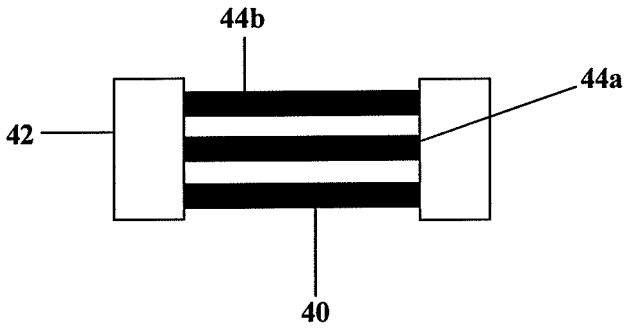

FIGURE 5b

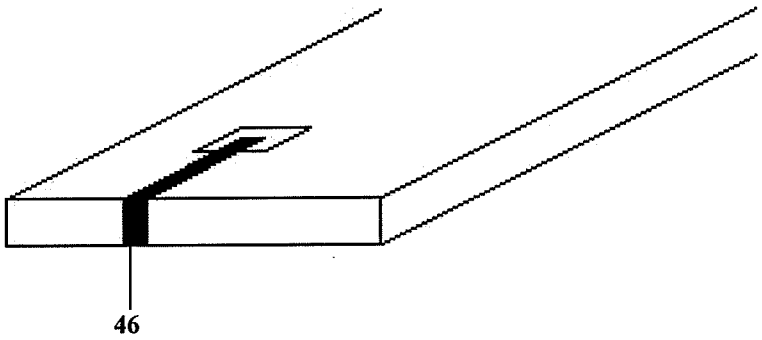

FIGURE 6

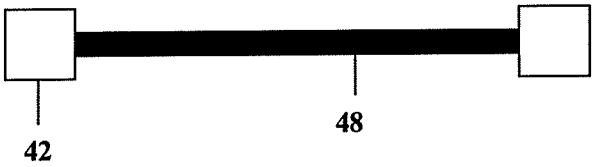

FIGURE 7a

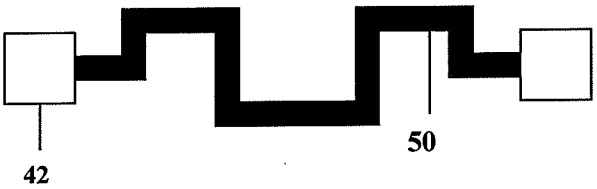

FIGURE 7b

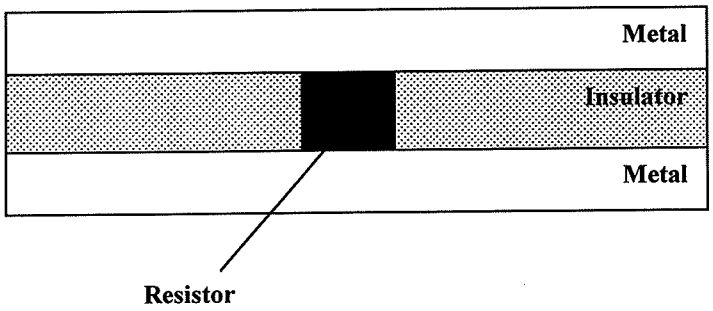

FIGURE 8

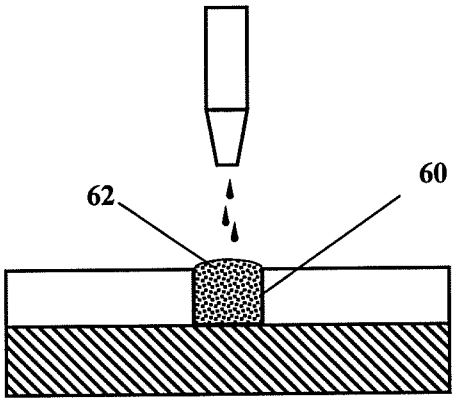

FIGURE 9a

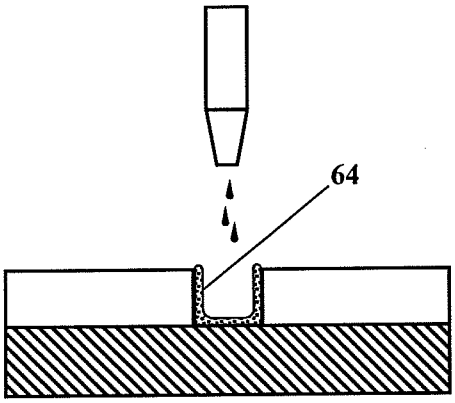

FIGURE 9b

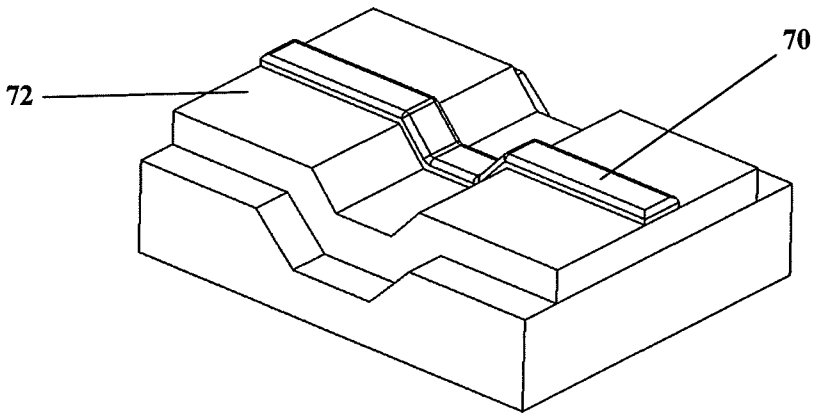

FIGURE 10a

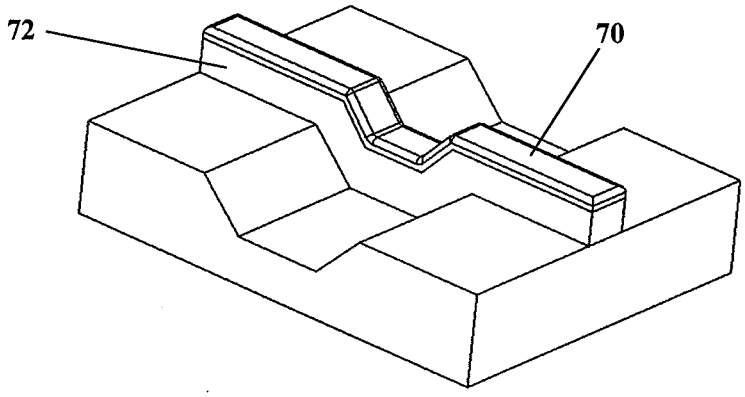

FIGURE 10b

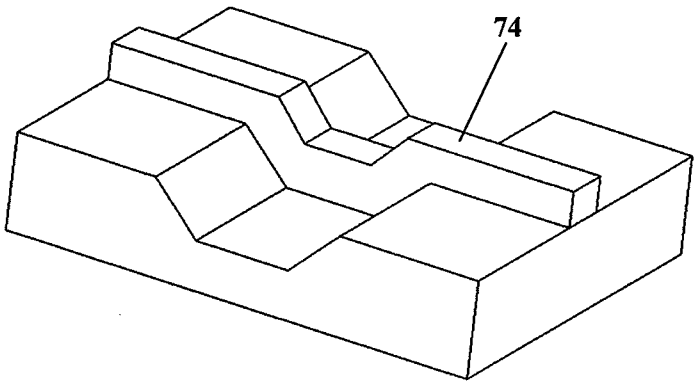

FIGURE 10c