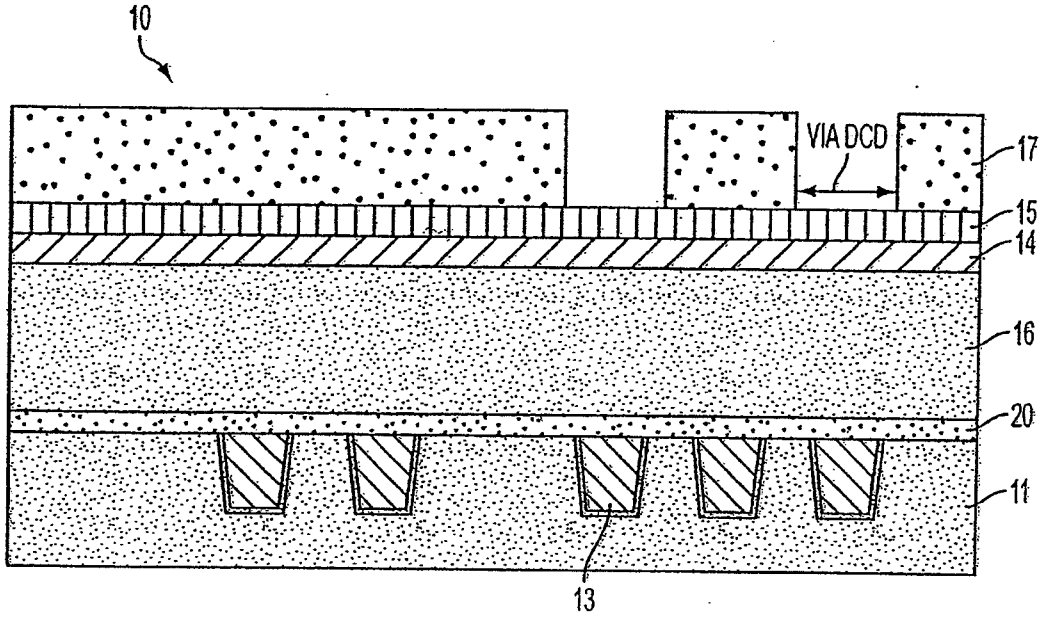

FIG. 1

PRIOR ART

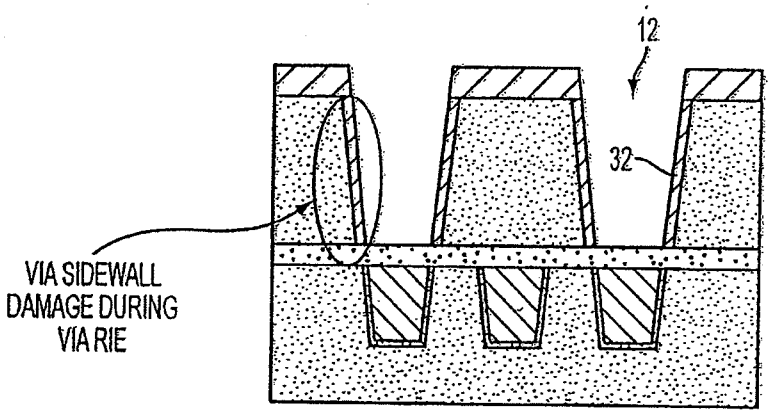

FIG. 2

PRIOR ART

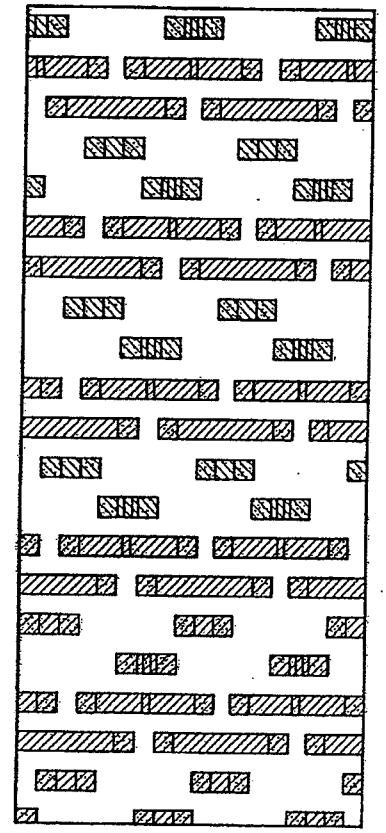

FIG. 2C

PRIOR ART

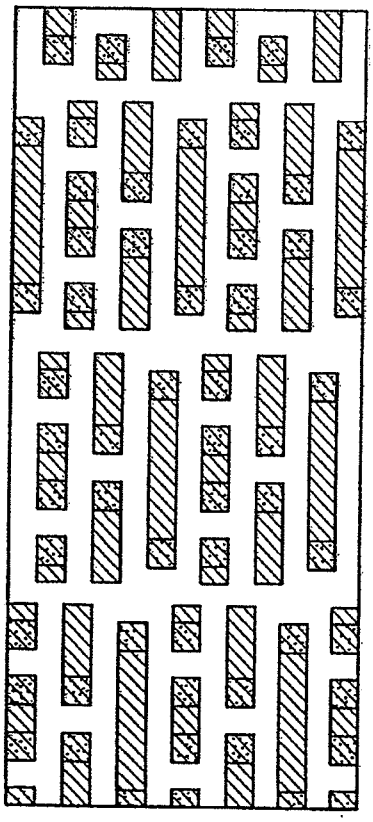

FIG. 2B

PRIOR ART

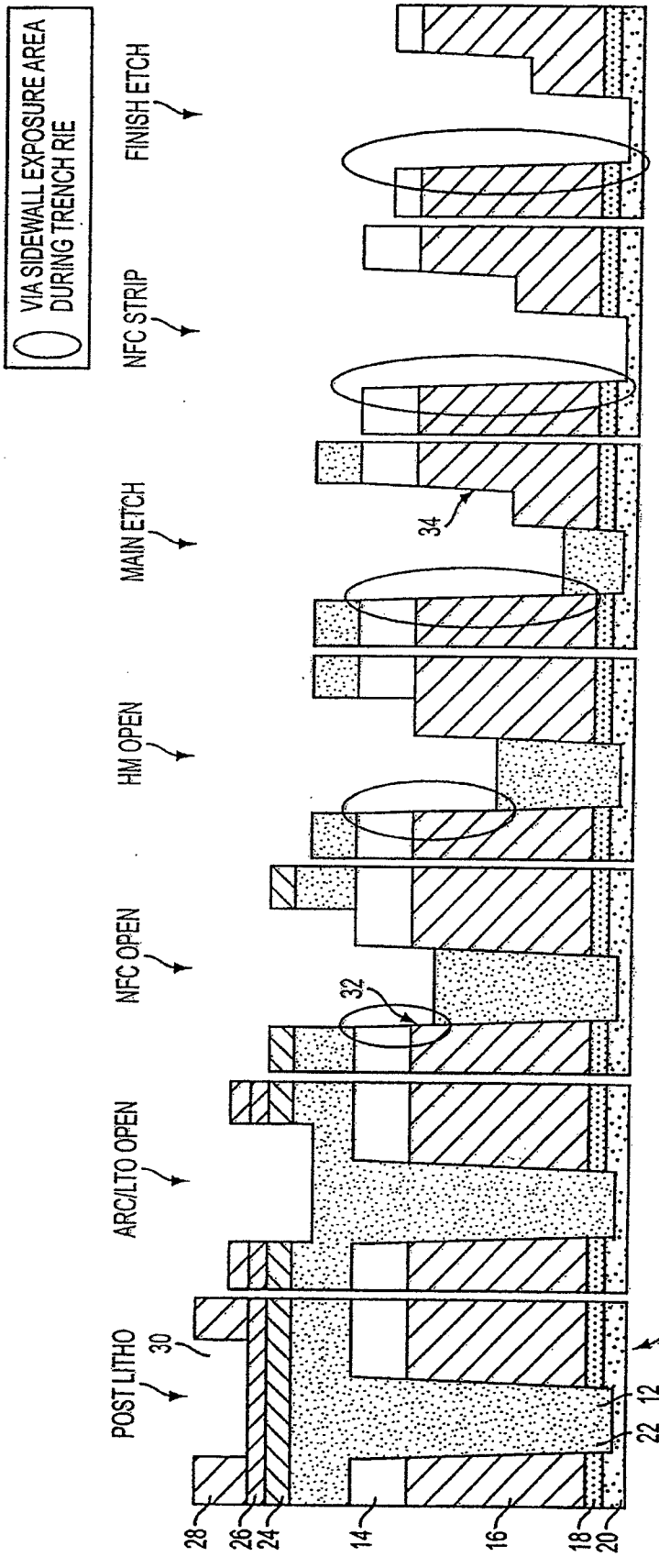

FIG. 3A PRIOR ART FIG. 3B PRIOR ART FIG. 3C PRIOR ART FIG. 3D PRIOR ART FIG. 3E PRIOR ART FIG. 3F PRIOR ART FIG. 3G PRIOR ART

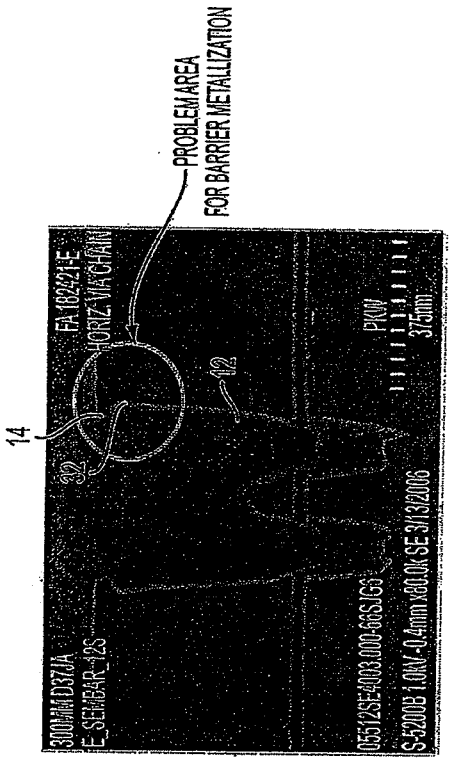

FIG. 4
PRIOR ART

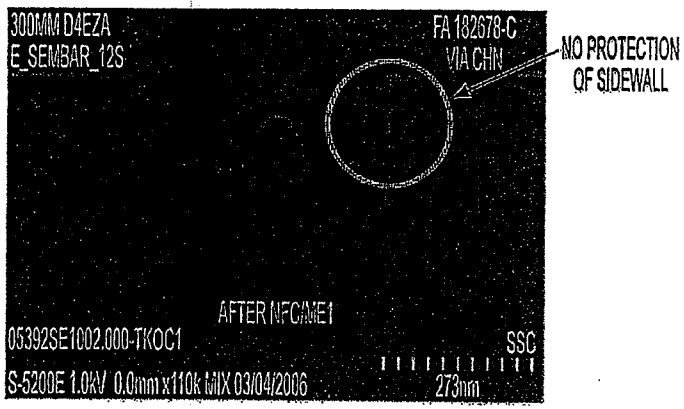

FIG. 5

PRIOR ART

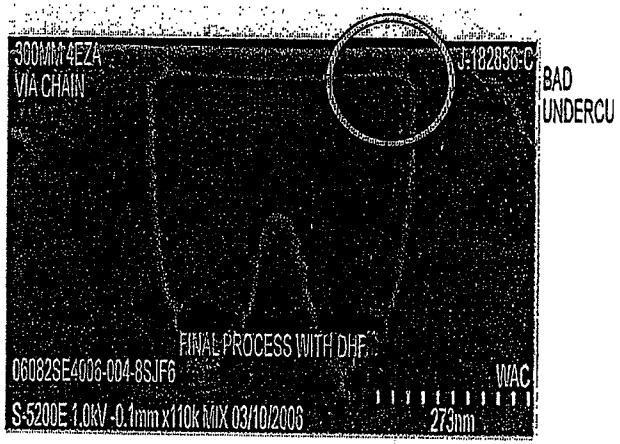

FIG. 6

PRIOR ART

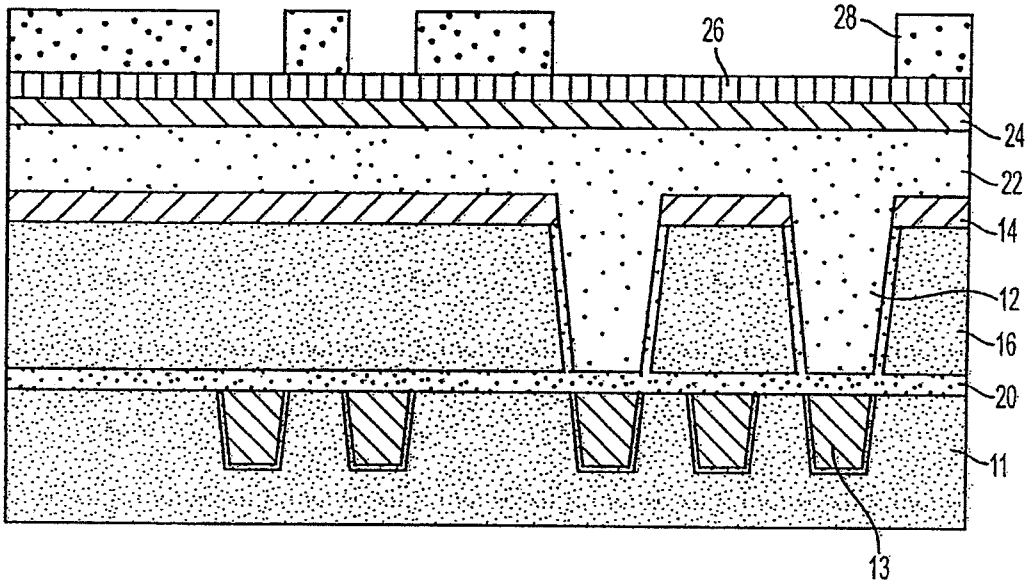

FIG. 7A
PRIOR ART

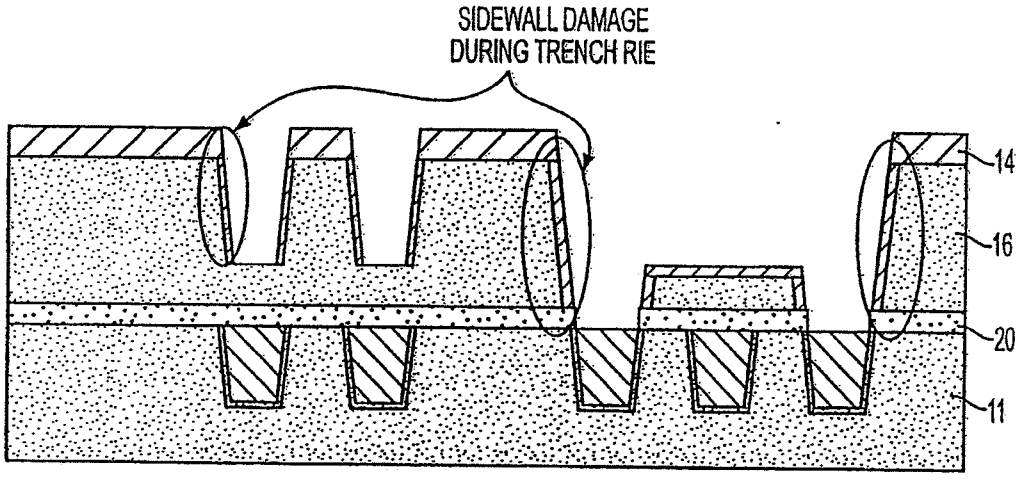

FIG. 7B
PRIOR ART

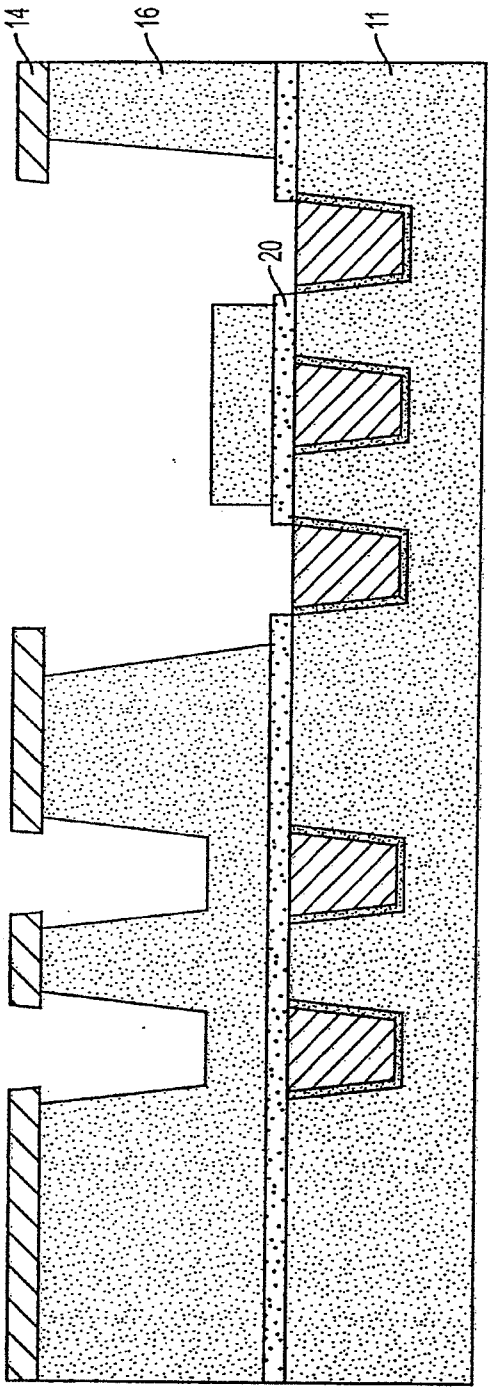

FIG. 7C
PRIOR ART

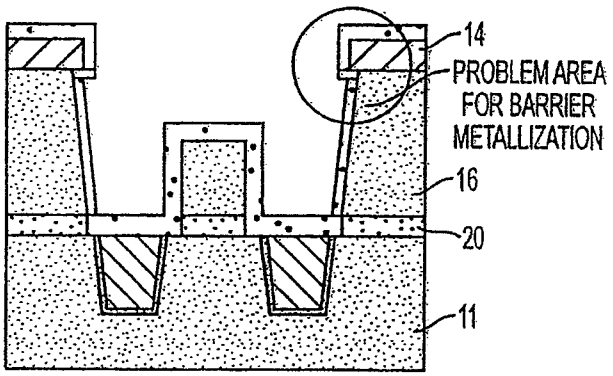

FIG. 7D

PRIOR ART

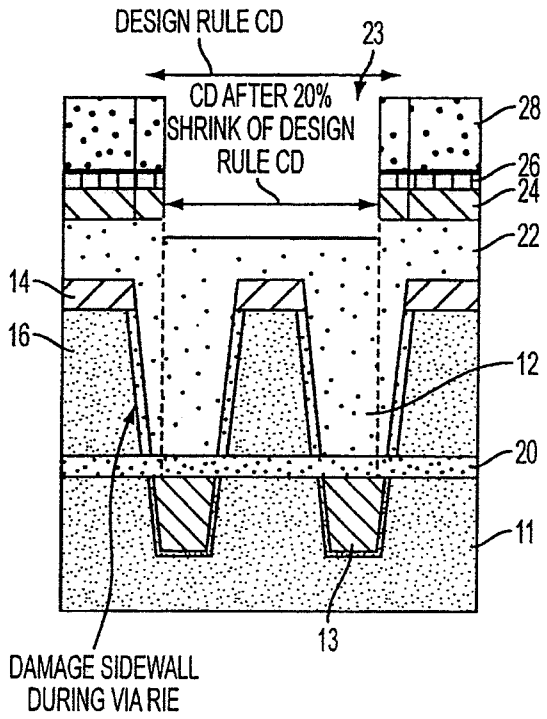
DESIGN RULE CD
23
CD AFTER 20% SHRINK OF DESIGN RULE CD
28
26
24
22
14
16
12
20
11
13
DAMAGE SIDEWALL DURING VIA RIE

FIG. 8

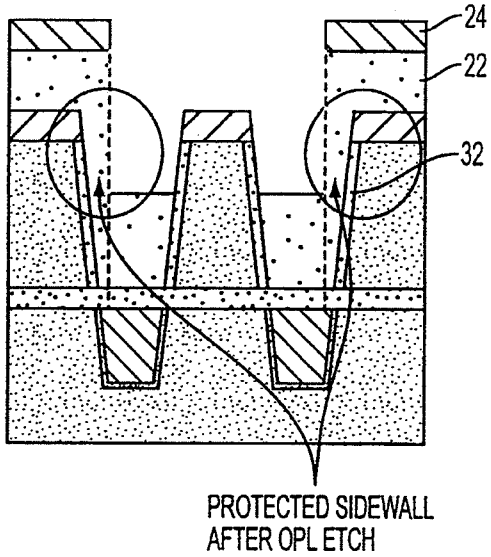
24
22
32
PROTECTED SIDEWALL AFTER OPL ETCH

FIG. 9

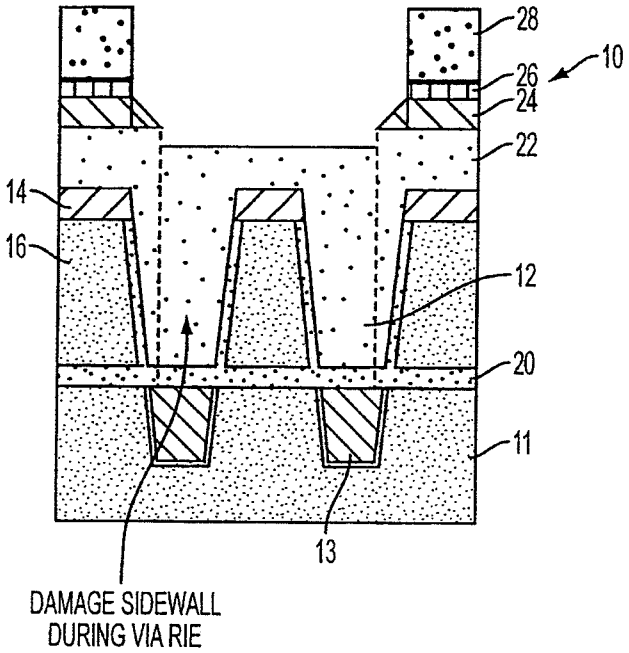
28
10
26
24
22
14
16
12
20
11
13
DAMAGE SIDEWALL
DURING VIA RIE

FIG. 8A

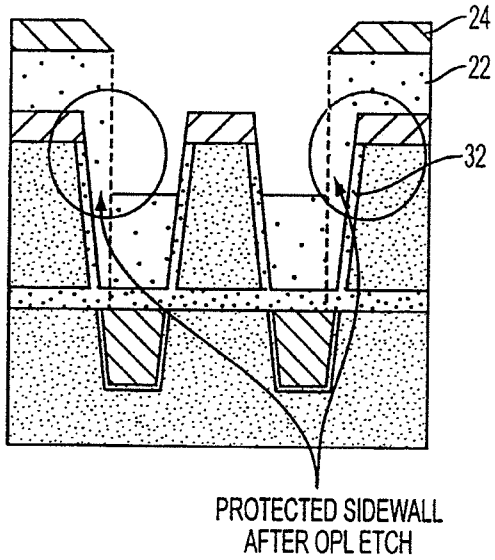
24
22
32
PROTECTED SIDEWALL
AFTER OPL ETCH

FIG. 9A

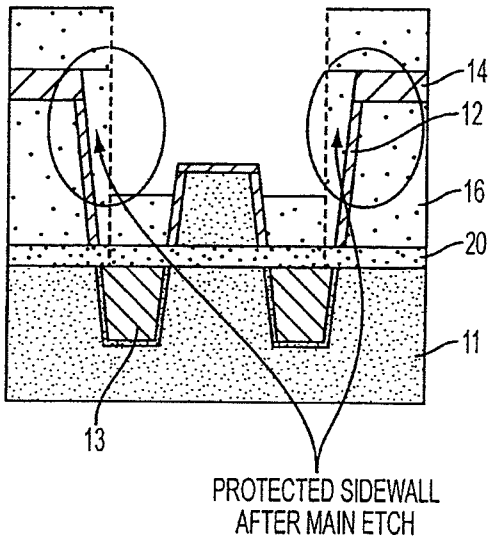
14
12
16
20
11
13
PROTECTED SIDEWALL
AFTER MAIN ETCH

FIG. 10

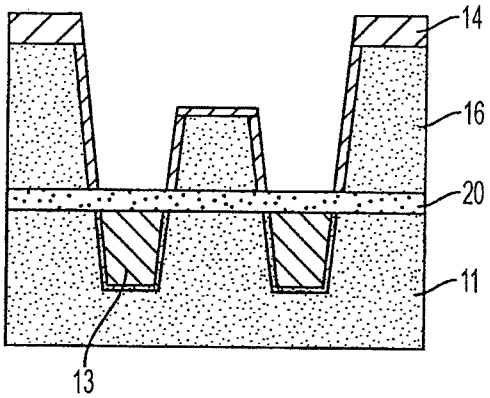
14
16
20
11
13

FIG. 11

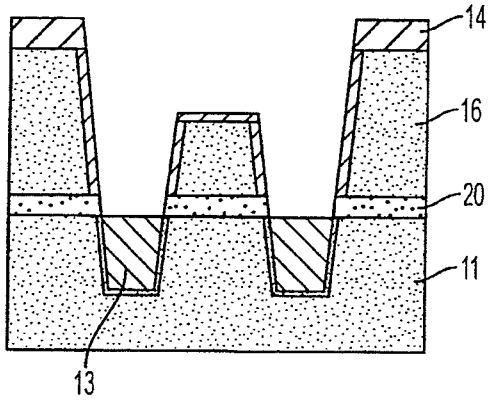

FIG. 12

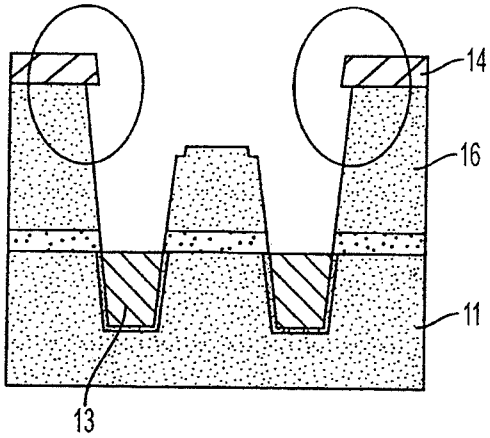

FIG. 13

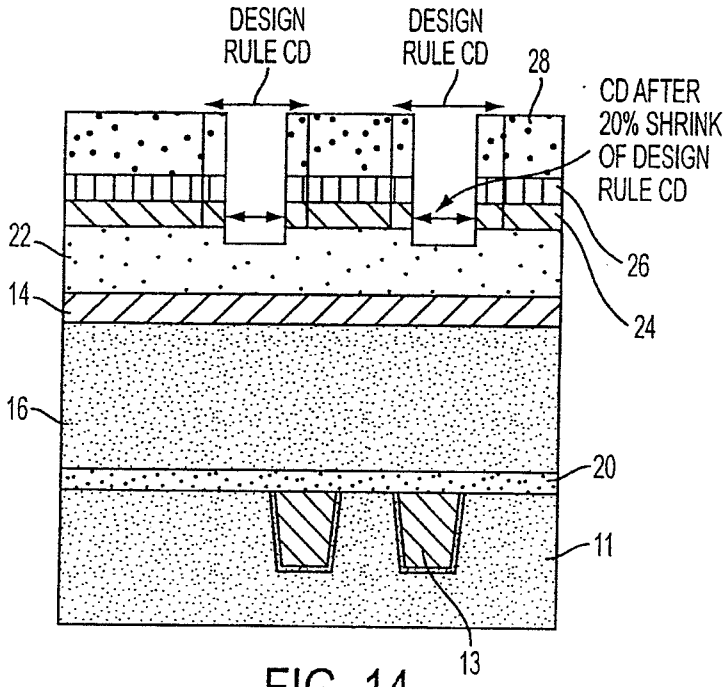
DESIGN
RULE CD
DESIGN
RULE CD
28
CD AFTER
20% SHRINK
OF DESIGN
RULE CD
22
26
14
24
16
20
11
13

FIG. 14

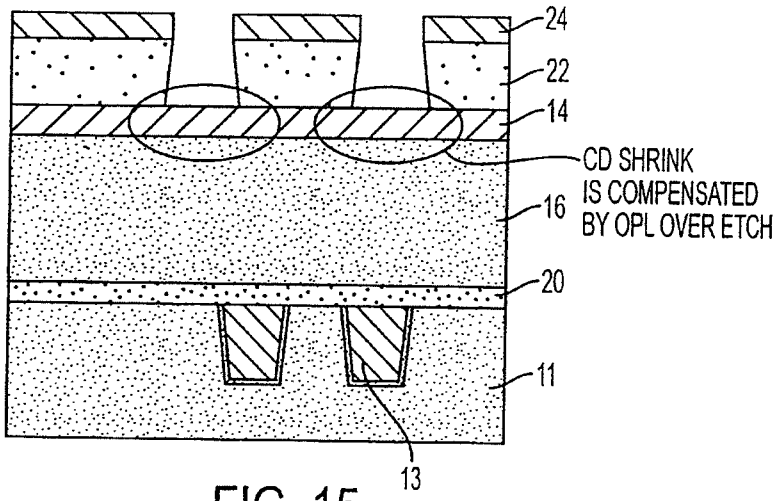
24
22
14
CD SHRINK
IS COMPENSATED
BY OPL OVER ETCH
16
20
11
13

FIG. 15

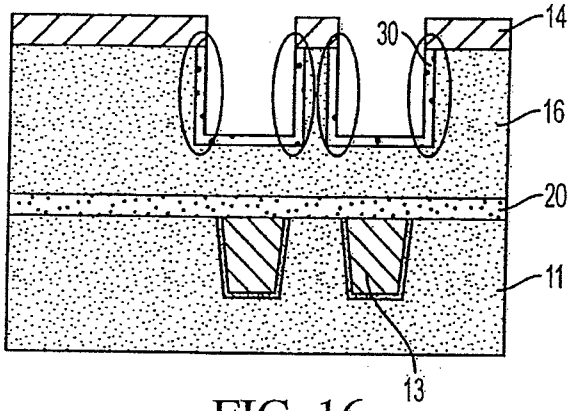

FIG. 16

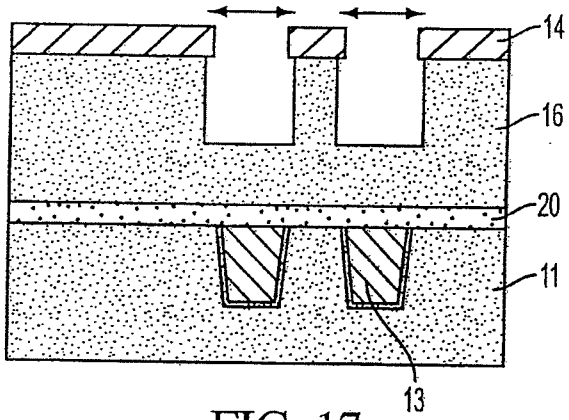

FIG. 17

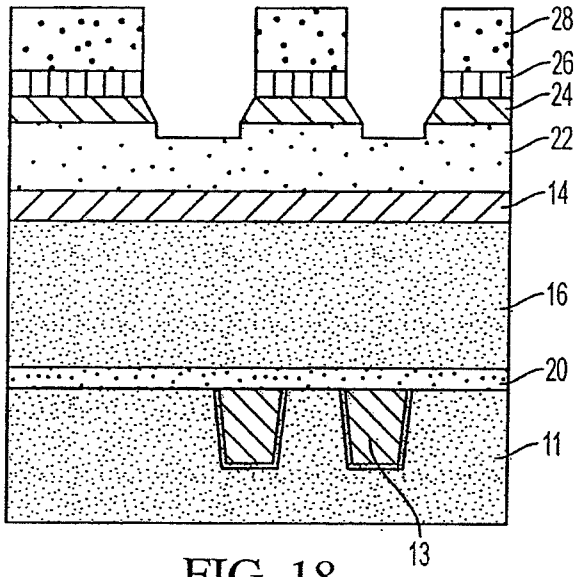
28
26
24
22
14
16
20
11
13

FIG. 18

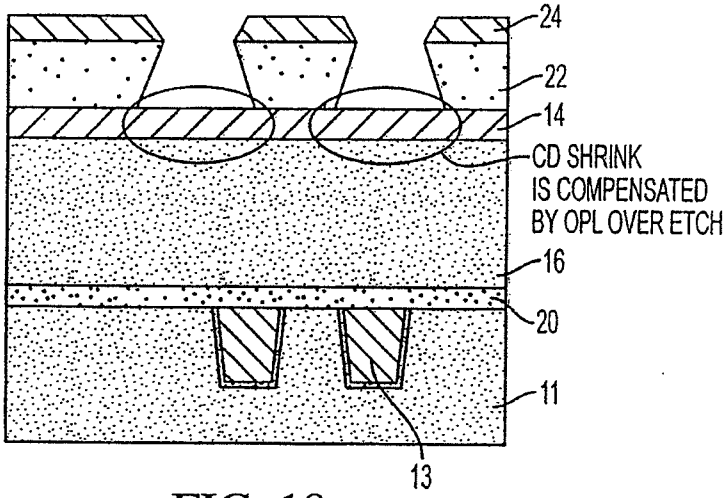
24
22
14
CD SHRINK
IS COMPENSATED
BY OPL OVER ETCH
16
20
11
13

FIG. 19