(12) INTERNATIONAL APPLICATION PUBLISHED UNDER THE PATENT COOPERATION TREATY (PCT)

CORRECTED VERSION

(19) World Intellectual Property Organization
International Bureau

(43) International Publication Date
29 July 2010 (29.07.2010)

PCT

(10) International Publication Number
WO 2010/085696 A9

(51) International Patent Classification:
A61M 37/00 (2006.01) *A61K 9/00* (2006.01)
A61F 9/00 (2006.01)

(21) International Application Number:
PCT/US2010/021868

(22) International Filing Date:
22 January 2010 (22.01.2010)

(25) Filing Language: English

(26) Publication Language: English

(30) Priority Data:

61/146,860	23 January 2009 (23.01.2009)	US
61/152,909	16 February 2009 (16.02.2009)	US
61/228,894	27 July 2009 (27.07.2009)	US
61/277,000	18 September 2009 (18.09.2009)	US

(71) Applicant *(for all designated States except US)*: **QLT PLUG DELIVERY INC.** [US/US]; 1098 Hamilton Court, Menlo Park, CA 94025 (US).

(72) Inventors; and
(71) Applicants : **BUTUNER, Zuhal** [CA/CA]; 18 Howard Avenue, Oakville, ON L6J 3Y3 (CA). **UTKHEDE, Deepank** [CA/CA]; 18263 68th Avenue, Surrey, BC V3S 9C6 (CA). **SIM, Sylvie** [US/US]; 7205 S. Harrison Hills Drive, #202, La Vista, NE 68128 (US). **WISEMAN, David, J.** [CA/CA]; 12580 Centre Drive, Surrey, BC V3V 3C2 (CA).

(74) Agent: **BEDGOOD, Robert, M.**; Pillsbury Winthrop Shaw Pittman, LLP, P.O. Box 10500, McLean, VA 22102 (US).

(81) Designated States *(unless otherwise indicated, for every kind of national protection available)*: AE, AG, AL, AM, AO, AT, AU, AZ, BA, BB, BG, BH, BR, BW, BY, BZ, CA, CH, CL, CN, CO, CR, CU, CZ, DE, DK, DM, DO, DZ, EC, EE, EG, ES, FI, GB, GD, GE, GH, GM, GT, HN, HR, HU, ID, IL, IN, IS, JP, KE, KG, KM, KN, KP, KR, KZ, LA, LC, LK, LR, LS, LT, LU, LY, MA, MD, ME, MG, MK, MN, MW, MX, MY, MZ, NA, NG, NI, NO, NZ, OM, PE, PG, PH, PL, PT, RO, RS, RU, SC, SD, SE, SG, SK, SL, SM, ST, SV, SY, TH, TJ, TM, TN, TR, TT, TZ, UA, UG, US, UZ, VC, VN, ZA, ZM, ZW.

(84) Designated States *(unless otherwise indicated, for every kind of regional protection available)*: ARIPO (BW, GH, GM, KE, LS, MW, MZ, NA, SD, SL, SZ, TZ, UG, ZM, ZW), Eurasian (AM, AZ, BY, KG, KZ, MD, RU, TJ, TM), European (AT, BE, BG, CH, CY, CZ, DE, DK, EE, ES, FI, FR, GB, GR, HR, HU, IE, IS, IT, LT, LU, LV,

[Continued on next page]

(54) Title: SUSTAINED RELEASED DELIVERY OF ONE OR MORE AGENTS

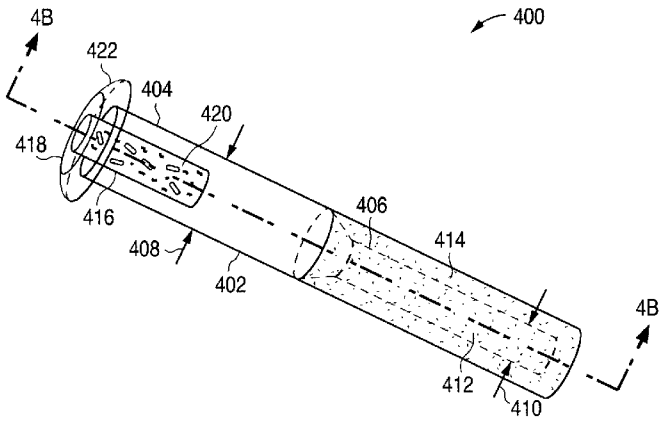

FIG. 4A

(57) Abstract: The lacrimal implant delivery systems and methods described herein provide for controlled release of a therapeutic agent for the treatment of disease, including the treatment of glaucoma, ocular hypertension, or elevated intraocular pressure with latanoprost or other anti- glaucoma agents. Treatment of disease, including glaucoma, ocular hypertension, or elevated intraocular pressure with latanoprost or other anti-glaucoma agent in conjunction with penetration enhancer, such as benzalkonium chloride, and/or artificial tears is also provided. Also provided are implants containing a drug core emplacable in a punctum adjacent to an eye of a patient for controlled release of a therapeutic agent such as latanoprost for the treatment of glaucoma, the drug core containing a polymer such as cross-linked silicone, a therapeutic agent, and an excipient, wherein the excipient can increase the rate of release of the agent from the drug core, or can increase the drug loading in the core without loss of desirable homogeneity of the agent within the core, or can improve retention of the agent in the eye or in tear fluid, or can increase corneal penetration of the agent into the eye.

WO 2010/085696 A9

MC, MK, MT, NL, NO, PL, PT, RO, SE, SI, SK, SM, TR), OAPI (BF, BJ, CF, CG, CI, CM, GA, GN, GQ, GW, ML, MR, NE, SN, TD, TG).

Declarations under Rule 4.17:

— *of inventorship (Rule 4.17(iv))*

Published:

— *with international search report (Art. 21(3))*

(88) Date of publication of the international search report:
4 November 2010

(48) Date of publication of this corrected version:
3 June 2011

(15) Information about Correction:
see Notice of 3 June 2011