(12) INTERNATIONAL APPLICATION PUBLISHED UNDER THE PATENT COOPERATION TREATY (PCT)

(19) World Intellectual Property Organization
International Bureau

(43) International Publication Date
18 September 2025 (18.09.2025)

WIPO | PCT

(10) International Publication Number
WO 2025/193156 A1

(51) International Patent Classification:
A61B 10/02 (2006.01) *A61B 34/10* (2016.01)
A61B 8/08 (2006.01) *G06T 7/593* (2017.01)

(21) International Application Number:
PCT/SG2024/050150

(22) International Filing Date:
12 March 2024 (12.03.2024)

(25) Filing Language: English

(26) Publication Language: English

(71) Applicant: **BIOBOT SURGICAL PTE LTD** [SG/SG]; 79 Ayer Rajah Crescent #04-05, Singapore 139955 (SG).

(72) Inventors: **CHEN, Hong Jun**; 451B Bukit Batok West Avenue 6, #21-695, Singapore 652451 (SG). **KEE, Yew Hwee**; 20 Rambai Road, Singapore 424339 (SG). **HEE, Jia Yun**; 13 Toh Yi Drive, #10-15, Singapore 590013 (SG). **POH, Lan Eng**; 325A Sengkang East Way #11-507, Singapore 541325 (SG). **QIAN, Guoyu**; 64 Teban Gardens Road, #19-645, Singapore 600064 (SG). **TAN, Yew Tong**; 54 Choa Chu Kang North 7, #09-39, Singapore 689529 (SG).

(74) Agent: **SPRUSON & FERGUSON (ASIA) PTE LTD**; 152 Beach Road, #37-05/06 Gateway East, Singapore 189721 (SG).

(81) Designated States *(unless otherwise indicated, for every kind of national protection available)*: AE, AG, AL, AM, AO, AT, AU, AZ, BA, BB, BG, BH, BN, BR, BW, BY, BZ, CA, CH, CL, CN, CO, CR, CU, CV, CZ, DE, DJ, DK, DM, DO, DZ, EC, EE, EG, ES, FI, GB, GD, GE, GH, GM, GT, HN, HR, HU, ID, IL, IN, IQ, IR, IS, IT, JM, JO, JP, KE, KG, KH, KN, KP, KR, KW, KZ, LA, LC, LK, LR, LS, LU, LY, MA, MD, MG, MK, MN, MU, MW, MX, MY, MZ, NA, NG, NI, NO, NZ, OM, PA, PE, PG, PH, PL, PT, QA, RO, RS, RU, RW, SA, SC, SD, SE, SG, SK, SL, ST, SV, SY, TH, TJ, TM, TN, TR, TT, TZ, UA, UG, US, UZ, VC, VN, WS, ZA, ZM, ZW.

(84) Designated States *(unless otherwise indicated, for every kind of regional protection available)*: ARIPO (BW, CV, GH, GM, KE, LR, LS, MW, MZ, NA, RW, SC, SD, SL, ST, SZ, TZ, UG, ZM, ZW), Eurasian (AM, AZ, BY, KG, KZ, RU, TJ, TM), European (AL, AT, BE, BG, CH, CY, CZ, DE, DK, EE, ES, FI, FR, GB, GR, HR, HU, IE, IS, IT, LT, LU, LV, MC, ME, MK, MT, NL, NO, PL, PT, RO, RS, SE, SI, SK, SM, TR), OAPI (BF, BJ, CF, CG, CI, CM, GA, GN, GQ, GW, KM, ML, MR, NE, SN, TD, TG).

(54) Title: A NEEDLE GUIDANCE SYSTEM AND METHOD

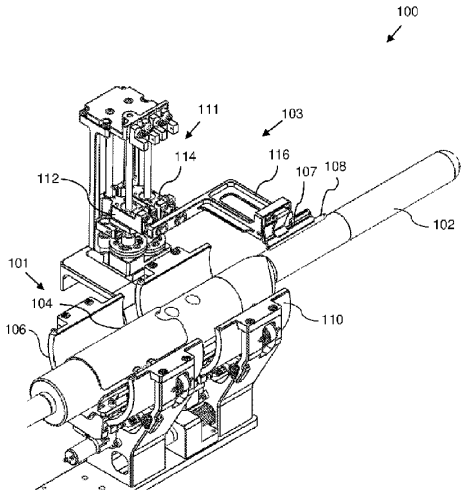

Fig. 1

(57) Abstract: A needle guidance system is provided. The needle guidance system includes a first assembly including at least one probe holder configured to receive a probe and a first rotation member coupled to the probe holder and configured to rotate the probe holder such that the probe rotates about a longitudinal axis of the probe, and a second assembly including at least one needle guide configured to receive a needle, a guide holder attached to the needle guide and configured to secure the needle guide and a second rotation member coaxial with the first rotation member. The second rotation member is coupled to the guide holder and configured to rotate the guide holder such that the needle rotates about the longitudinal axis of the probe. A method of constructing an ultrasound image is further described.

WO 2025/193156 A1

[Continued on next page]

Declarations under Rule 4.17:
— *of inventorship (Rule 4.17(iv))*

Published:
— *with international search report (Art. 21(3))*