Citation List

Non-Patent Document 1: Chemistry A European Journal, 2016, Volume 22 (pages 13,046 to 13,049)

SUMMARY

In one aspect, there is provided an alkoxysilyl group-containing organic silazane compound having an average composition represented by general formula (1) below:

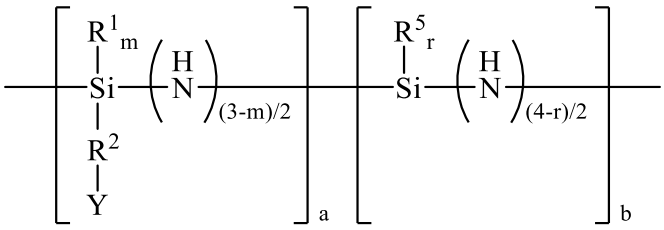

(1)

wherein R^1 is each independently a monovalent hydrocarbon group having 1 to 10 carbon atoms, R^2 is each independently a substituted or unsubstituted divalent hydrocarbon group having 2 to 20 carbon atoms containing a heteroatom of O, S, or Si, Y is a group represented by formula (6) or (7) below

$$-SiR^3_n(OR^4)_{3-n} \quad (6)$$

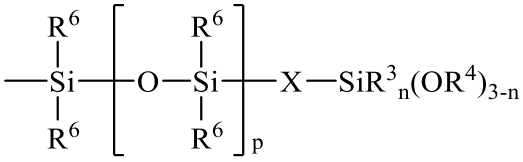

(7)

wherein R^3 and R^4 are each independently a monovalent hydrocarbon group having 1 to 10 carbon atoms, R^6 is each independently a substituted or unsubstituted monovalent hydrocarbon group having 1 to 10 carbon atoms, X is an oxygen atom, or a substituted or unsubstituted divalent hydrocarbon group having 1 to 18 carbon atoms, p is an integer of 0 to 9, and n is 0, 1, or 2, R^5 is each independently a substituted or unsubstituted monovalent hydrocarbon group having 1 to 50 carbon atoms optionally containing a heteroatom of O or S, m is each independently 0 or 1, r is each independently 0, 1, or 2, and a and b are numbers which satisfy $0 < a \leq 1$, $0 \leq b < 1$, and $a+b = 1$.

In another aspect, there is provided a method for producing the alkoxysilyl group-containing organic silazane compound as described herein, comprising:

reacting, in the presence of a radical generator, an unsaturated bond-containing organic silazane compound represented by general formula (2) below:

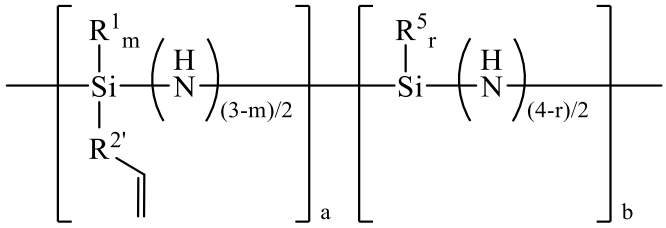

(2)

wherein $R^{2'}$ is each independently a single bond or a substituted or unsubstituted divalent hydrocarbon group having 1 to 18 carbon atoms containing a heteroatom of O, S, or Si, and R^1, R^5, a, b, m, and r have the same meaning as above, with a mercapto group-containing silane compound represented by general formula (5) below:

$$HS\text{-}R^8\text{-}SiR^3_n(OR^4)_{3-n} \qquad (5)$$

wherein R^8 is a divalent hydrocarbon group having 1 to 18 carbon atoms, and R^3, R^4, and n have the same meaning as above.

DISCLOSURE OF INVENTION

Although the silazane compound described in Non-Patent Document 1 has various substituents, the silazane compound does not form a cured coating because it undergoes two-dimensional crosslinking at most even if hydrolytic condensation proceeds. The silazane compound has only two high reactive Si-N bonds in the molecule, and thus the effect of silazane may not be sufficiently exhibited.

Silicone resins can impart alcohol resistance when they are heated and cured at 100 to 250°C. However, they have a problem in workability because the silicone resins need a dedicated instrument for heat curing. In particular, heating in the outdoors is difficult. Although a cured coating can be formed at room temperature by combining silicone resins with a catalyst, the resulting cured coating has a problem of low alcohol resistance.

Considering that the silicone resins are used as coating agents or surface treatment raw materials, the coating is supposed to be cleaned with an alcohol-containing detergent or the like when it is soiled. However, the silicone resins with low alcohol resistance are peeled from the coated surface and the desired performance is lost when the resins are washed with an alcohol-containing detergent. Also, silicone oligomers are low molecular silicone resins, and thus they have the same problem as above.

An object of the invention is to provide an alkoxysilyl group-containing organic silazane compound which quickly forms, at room temperature, a cured coating having excellent alcohol resistance, a method for producing the same, a composition containing the same, and a cured product.

The inventors of the present invention have found that an alkoxysilyl group-containing organic silazane compound having a predetermined structure can be quickly cured at room temperature, and gives a cured coating having alcohol resistance.

Examples of the alkoxysilyl group-containing organic silazane compound include the following. In formulas below, Me represents a methyl group, Et represents an ethyl group, and Hex represents an n-hexyl group.

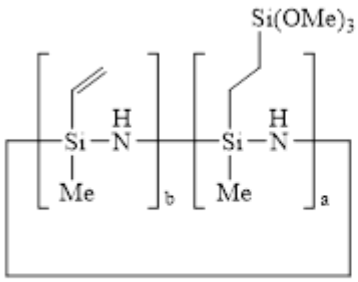

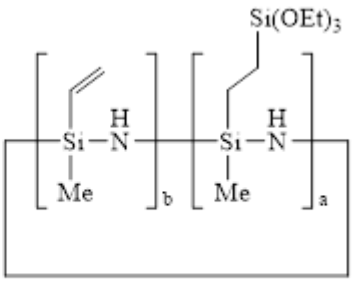

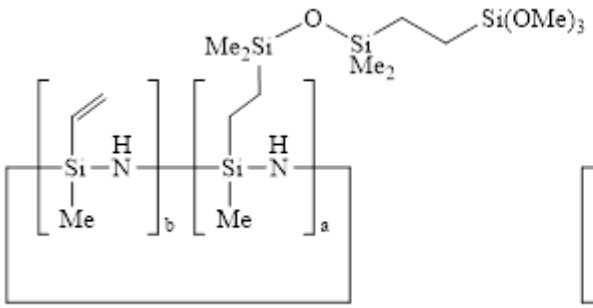

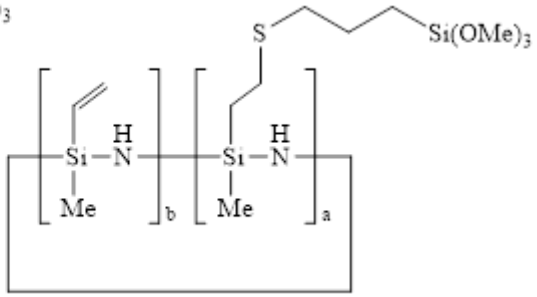

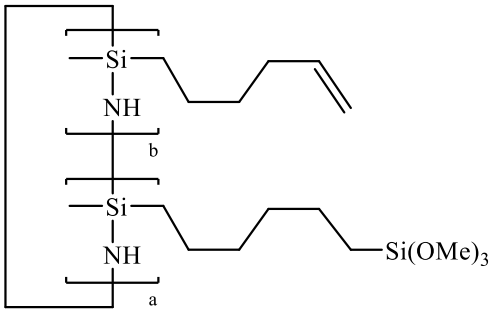

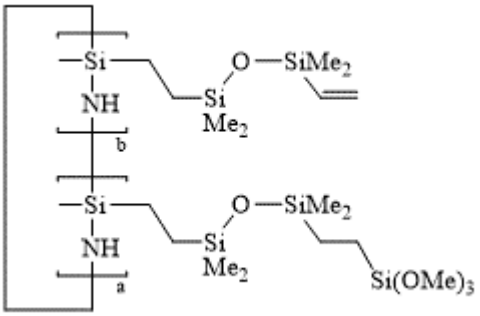

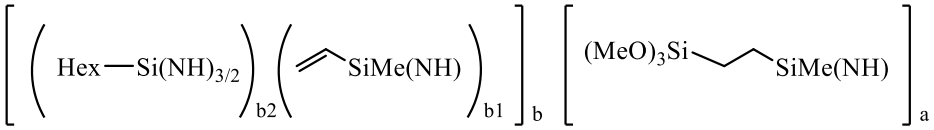

In formulas above, though a and b are as described above, they are preferably numbers which satisfy a/(a+b) = 0.2 to 0.9. b1 and b2 are the numbers which satisfy b1+b2 = b.

CLAIMS:

1. An alkoxysilyl group-containing organic silazane compound having an average composition represented by general formula (1) below:

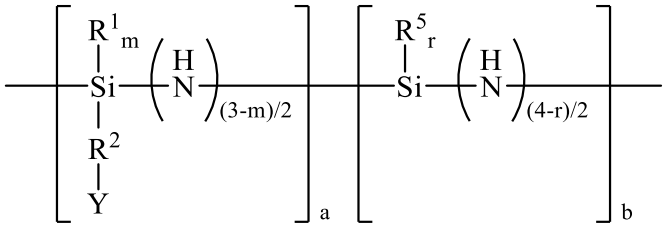

(1)

wherein R^1 is each independently a monovalent hydrocarbon group having 1 to 10 carbon atoms, R^2 is each independently a substituted or unsubstituted divalent hydrocarbon group having 2 to 20 carbon atoms containing a heteroatom of O, S, or Si, Y is a group represented by formula (6) or (7) below:



(6)

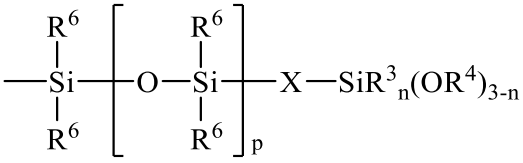

(7)

wherein R^3 and R^4 are each independently a monovalent hydrocarbon group having 1 to 10 carbon atoms, R^6 is each independently a substituted or unsubstituted monovalent hydrocarbon group having 1 to 10 carbon atoms, X is an oxygen atom, or a substituted or unsubstituted divalent hydrocarbon group having 1 to 18 carbon atoms, p is an integer of 0 to 9, and n is 0, 1, or 2,

R^5 is each independently a substituted or unsubstituted monovalent hydrocarbon group having 1 to 50 carbon atoms optionally containing a heteroatom of O or S, m is each independently 0 or 1, r is each independently 0, 1, or 2, and a and b are numbers which satisfy $0 < a \leq 1$, $0 \leq b < 1$, and $a+b = 1$.

2. An alkoxysilyl group-containing organic silazane compound according to claim 1 which has any one of the following formula:

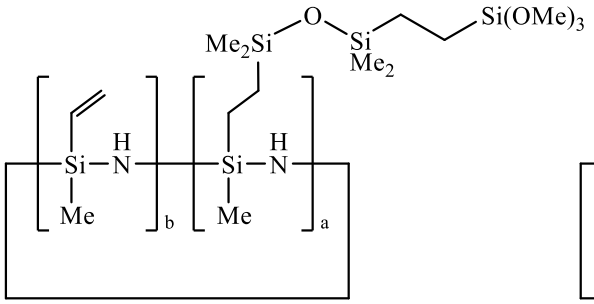

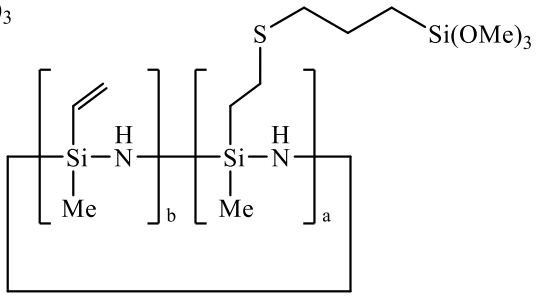

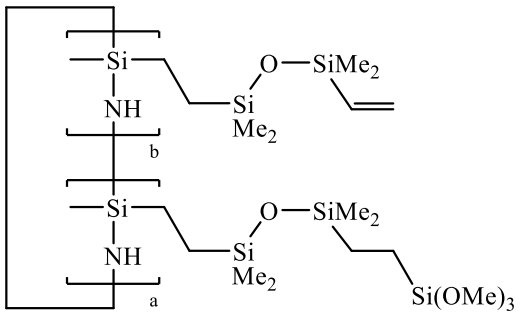

wherein Me is methyl, a and b are numbers which satisfy $0 < a \leq 1$, $0 \leq b < 1$, and $a+b = 1$.

3. A method for producing the alkoxysilyl group-containing organic silazane compound according to claim 1, comprising:

reacting, in the presence of a platinum catalyst, an unsaturated bond-containing organic silazane compound represented by general formula (2) below:

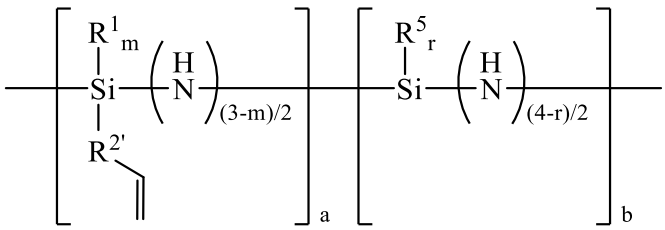

(2)

wherein $R^{2'}$ is each independently a single bond or a substituted or unsubstituted divalent hydrocarbon group having 1 to 18 carbon atoms containing a heteroatom of O, S, or Si, and R^1, R^5, a, b, m, and r have the same meaning as above,

with a hydrogensilane compound represented by general formula (3) or (4) below:

$$H\text{-}SiR^3{}_n(OR^4)_{3-n} \quad (3)$$

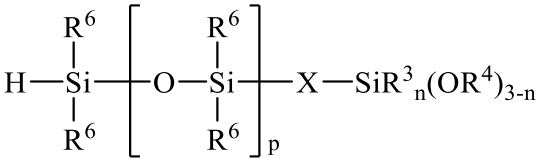

(4)

wherein R^3, R^4, R^6, X, n, and p have the same meaning as above.

4. A method for producing the alkoxysilyl group-containing organic silazane compound according to claim 1, comprising:

reacting, in the presence of a radical generator, an unsaturated bond-containing organic silazane compound represented by general formula (2) below:

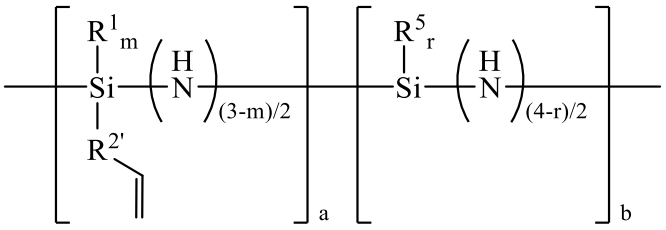

(2)

wherein $R^{2'}$ is each independently a single bond or a substituted or unsubstituted divalent hydrocarbon group having 1 to 18 carbon atoms containing a heteroatom of O, S, or Si, and R^1, R^5, a, b, m, and r have the same meaning as above,

with a mercapto group-containing silane compound represented by general formula (5) below:

$$HS\text{-}R^8\text{-}SiR^3{}_n(OR^4)_{3-n} \quad (5)$$

wherein R^8 is a divalent hydrocarbon group having 1 to 18 carbon atoms, and R^3, R^4, and n have the same meaning as above.

5. A composition comprising:

the alkoxysilyl group-containing organic silazane compound according to claim 1; and

at least one metal compound selected from the group consisting of a titanium compound, an aluminum compound, a zinc compound, and a tin compound.

6. The composition according to claim 5, further comprising a solvent.

7. A cured product of the composition according to claim 5 or 6.